勝 特 力 材 料 886-3-5753170
胜特力电子(上海) 86-21-34970699
胜特力电子(深圳) 86-755-83298787
Http://www.100y.com.tw

PRODUCT LIST

◆MINIATURE ALUMINUM ELECTROLYTIC CAPACITORS

	SERIES		FEATURES	GENERAL PURPOSE	MINIATURIZED	LOW PROFILE	LOW IMPEDANCE	LONG LIFE	RoHS COMPLIANCE	RATED VOLTAGE (V.DC)	RATED CAPACITANCE (μF)	CATEGORY TEMPERATURE RANGE (°C)
V CHIP	NEW TLV		105°C LOW IMPEDANCE,LONG LIFE		●		●	●	●	6.3~35	100~10000	−55~+105
	TFV		105°C LOW IMPEDANCE		●		●		●	6.3~35	6.8~820	−55~+105
	TZV		105°C LOW IMPEDANCE		●		●		●	6.3~50	4.7~1000	−55~+105
	JZV		105°C LOW IMPEDANCE, HIGH TEMPERATURE REFLOW		●		●		●	6.3~35	4.7~1000	−55~+105
	SZV		105°C LOW IMPEDANCE		●		●		●	6.3~35	1~100	−55~+105
	NEW THV	*	125°C LOW ESR,3000 HOURS		●		●	●	●	–	–	–
	TXV		125°C LOW ESR		●		●	●	●	10~35	22~470	−40~+125
	SXV		125°C 1000 HOURS					●	●	10~50	10~470	−40~+125
	SLV		105°C LONG LIFE 5000HOURS		●			●	●	6.3~50	0.1~100	−40~+105
	SJV		105°C LONG LIFE 3000 HOURS		●			●	●	6.3~50	0.1~220	−40~+105
	SGV		105°C LONG LIFE 2000 HOURS		●			●	●	6.3~50 63, 100	0.1~6800	−55~+105 −40~+105
	JGV		105°C LONG LIFE 2000 HOURS, HIGH TEMPERATURE REFLOW		●			●	●	6.3~50	0.1~1000	−55~+105
	SKV		105°C STANDARD	●	●				●	6.3~50	0.1~1000	−55~+105
	JKV		105°C STANDARD, HIGH TEMPERATURE REFLOW	●	●				●	6.3~50	0.1~1000	−55~+105
	SEV		85°C STANDARD	●	●				●	4~100	0.1~10000	−40~+85
	JEV		85°C STANDARD, HIGH TEMPERATURE REFLOW	●	●				●	6.3~50	0.1~1000	−40~+85
	NSKV		105°C BI-POLAR	●	●				●	6.3~50	0.1~47	−55~+105
	NSEV		85°C BI-POLAR	●	●				●	6.3~50	0.1~47	−40~+85
LOW IMPEDANCE	NEW ZLK		105°C ULTRA HIGH RIPPLE CURRENT, LOW IMPEDANCE		●		●		●	10~35	220~1800	−40~+105
	ZLJ		105°C HIGH RIPPLE CURRENT		●		●	●	●	10~50	27~2200	−40~+105
	ZLG		105°C ULTRA LOW IMPEDANCE				●		●	6.3~35	4.7~3900	−40~+105
	ZLH		105°C MINIATURIZED, LONG LIFE, LOW IMPEDANCE		●		●	●	●	6.3~100	8.2~8200	−40~+105
	ZL		105°C HIGH RIPPLE LOW IMPEDANCE		●		●		●	6.3~100	5.6~6800	−40~+105
	ZT		125°C 1000~4000 HOURS, LOW IMPEDANCE				●	●	●	10~35	22~2200	−40~+125
	YXF		105°C LONG LIFE LOW IMPEDANCE	●	●		●	●	●	6.3~250	0.47~15000	−40~+105
	YXG		105°C HIGH RIPPLE CURRENT		●	●	●	●	●	6.3~100	6.8~18000	−40~+105
	YXH		105°C HIGH RIPPLE CURRENT		●	●	●	●	●	6.3~100	6.8~18000	−40~+105
For PC mother board	MBZ・MCZ		105°C ULTRA LOW ESR		●		●		●	6.3~16	470~3300	−40~+105
LONG LIFE	NEW BXF		105°C HIGH RIPPLE CURRENT, LONG LIFE,20mm		●	●		●	●	160~450	10~220	−25~+105
	UPGRADE BXC		105°C HIGH RIPPLE CURRENT, LONG LIFE		●			●	●	160~500	1~220	−25~+105
	BXA		105°C LONG LIFE, 10000~12000 HOURS		●			●	●	160~450	6.8~220	−25~+105
	CFX		105°C 5000 HOURS		●			●	●	200~400	2.2~100	−25~+105
	RX50		150°C 1000 HOURS					●	●	10~63	47~1000	−40~+150
	RX30		130°C 1000~4000 HOURS				●	●	●	10~100 200, 400	1~4700	−40~+130 −25~+130
	YXM		105°C MINIATURIZED,LONG LIFE 10000 HOURS		●			●	●	10~100	0.47~330	−25~+105
For AC adapter	NEW AX		105°C ULTRA MINIATURIZED		●	●			●	400	4.7~15	−40~+105
LOW PROFILE	MH5		105°C 5mm HEIGHT	●	●	●			●	6.3~50	0.1~100	−40~+105
	MH7		105°C 7mm HEIGHT	●	●	●			●	6.3~50	0.1~100	−40~+105
	ML		105°C LONG LIFE LOW PROFILE		●	●		●	●	6.3~50	1~1000	−40~+105
	WXA		105°C 9mm~25mm HEIGHT		●	●			●	6.3~50 160~250 350~450	1.5~10000	−55~+105 −40~+105 −25~+105
	MS5		85°C 5mm HEIGHT	●	●	●			●	4~50	0.1~470	−40~+85
	MS7		85°C 7mm HEIGHT	●	●	●			●	4~63	0.1~470	−40~+85
	WA		85°C 9mm~25mm HEIGHT		●	●			●	6.3~250 350~450	1.5~10000	−40~+85 −25~+85
GENERAL PURPOSE	PX		105°C ULTRA MINIATURIZED	●	●				●	6.3~100 160~400 450	1~33000	−55~+105 −40~+105 −25~+105
	YXA		105°C STANDARD	●	●				●	6.3~100 160~250 350~450	0.1~22000	−55~+105 −40~+105 −25~+105
	PK		85°C ULTRA MINIATURIZED	●	●				●	6.3~400 450	0.47~33000	−40~+85 −25~+85
	YK		85°C STANDARD	●	●				●	6.3~250 350~450	0.1~22000	−40~+85 −25~+85
LOW LEAKAGE CURRENT	TWL		85°C LOW LEAKAGE CURRENT		●				●	6.3~50	0.1~2200	−40~+85
BI−POLAR	NXA		105°C STANDARD	●	●				●	6.3~50	0.47~1000	−55~+105
	NW5		85°C 5mm HEIGHT	●	●	●			●	6.3~50	0.1~47	−40~+85
	NW7		85°C 7mm HEIGHT	●	●	●			●	6.3~50	0.1~47	−40~+85
	NA		85°C STANDARD	●	●				●	6.3~100	0.47~1000	−40~+85
For Automotive	NEW HRV	*	125°C 3000HOURS,SMD TYPE		●		●	●	●	25~50	470~8200	−55~+125
	NEW HRX	*	125°C 3000HOURS,LEAD WIRE		●		●	●	●	25~50	470~8200	−55~+125

*Please contact our sales offices.

PRODUCT LIST

◆MINIATURE ALUMINUM ELECTROLYTIC CAPACITORS

	SERIES	FEATURES	GENERAL PURPOSE	MINIATURIZED	HIGH RIPPLE CURRENT	FOR OVER VOLTAGE VENT TEST	LONG LIFE	RoHS COMPLIANCE	RATED VOLTAGE (V.DC)	RATED CAPACITANCE (μF)	CATEGORY TEMPERATURE RANGE (°C)
FOR SWITCHING POWER SUPPLY	UPGRADE TXW	105°C 10000 HOURS,MINIATURIZED		●			●	●	200～450	12～560	−25～+105
	CXW	105°C 5000 HOURS,ULTRA MINIATURIZED		●			●	●	400～450	33～220	−25～+105
	QXW	105°C ULTRA MINIATURIZED		●				●	400～450	27～220	−25～+105
	KXW	105°C MINIATURIZED		●				●	200～450	18～560	−25～+105
	SXW	FOR OVER VOLTAGE VENT OPERATION TEST						●	200,400	4.7～330	−25～+105
	SAW	MINIATURIZED FOR OVER VOLTAGE VENT OPERATION TEST		●				●	400	18～120	−25～+105

◆LARGE CAN TYPE ALUMINUM ELECTROLYTIC CAPACITORS

	SERIES	FEATURES	GENERAL PURPOSE	MINIATURIZED	HIGH RIPPLE CURRENT	FOR OVER VOLTAGE VENT TEST	LONG LIFE	RoHS COMPLIANCE	RATED VOLTAGE (V.DC)	RATED CAPACITANCE (μF)	CATEGORY TEMPERATURE RANGE (°C)
SNAP-IN TYPE	NEW USH	85°C ULTRA MINIATURIZED	●	●				●	400～450	120～1000	−25～+85
	MXH	105°C ULTRA MINIATURIZED	●	●	●			●	400～450	100～820	−25～+105
	MXG	105°C MINIATURIZED	●	●	●			●	50～100 160～450	680～15000 56～2700	−40～+105 −25～+105
	MXC	105°C STANDARD	●					●	10～100 160～450	560～68000 47～2700	−40～+105 −25～+105
	HXC	105°C HIGH RIPPLE CURRENT			●			●	200～450	68～2200	−25～+105
	VXH	105°C 5000 HOURS LIFE MINIATURIZED		●	●		●	●	200～450	100～2200	−25～+105
	VXG	105°C 5000 HOURS LIFE		●	●		●	●	10～100 200～450	560～56000 82～2200	−40～+105 −25～+105
	VXR	105°C 7000 HOURS LIFE			●		●	●	160～450	39～2200	−25～+105
	AXF	105°C 20mm HEIGHT	●	●				●	10～100 160～450	330～10000 27～680	−40～+105 −25～+105
	KXF	105°C 20mm HEIGHT MINIATURIZED	●	●				●	160～450	39～820	−25～+105
	SXG	OVER-VOLTAGE VENTING SPECIFICATION		●		●		●	200, 400, 450	39～1200	−25～+105
	SXC	OVER-VOLTAGE VENTING SPECIFICATION				●		●	200, 400	22～1500	−25～+105
	SXR	OVER-VOLTAGE VENTING SPECIFICATION				●		●	250, 450	39～1000	−25～+105
	USG	85°C MINIATURIZED	●	●	●			●	160～250 400～450	220～3300 68～820	−40～+85 −25～+85
	USC	85°C STANDARD	●					●	10～250 315～450	180～82000 56～1000	−40～+85 −25～+85
LUG TERMINAL TYPE	MXY	105°C MINIATURIZED HORIZONTAL MOUNT		●				●	160～400	68～1500	−25～+105
SCREW TERMINAL TYPE	LSQ	85°C STANDARD	●					●	10～100 160～450	2200～680000 270～33000	−40～+85 −25～+85
	LSU	85°C MINIATURIZED	●		●		●	●	350～450	1200～18000	−25～+85
	LSW	105°C STANDARD	●					●	10～100 160～400	2200～680000 220～22000	−40～+105 −25～+105
	LSG	105°C MINIATURIZED	●		●		●	●	350～450	1000～18000	−25～+105

◆PHOTO FLASH ALUMINUM ELECTROLYTIC CAPACITORS

SERIES	FEATURES	RoHS COMPLIANCE	RATED VOLTAGE (V.DC)	RATED CAPACITANCE (μF)	CATEGORY TEMPERATURE RANGE (°C)
FK	STANDARD LUG TERMINAL	●	330 360	150~1500 150~1300	−20~+55
FKX	MINIATURIZED LUG TERMINAL	●	330 360	150~1500 150~1500	−20~+55
SF	HIGH VOLTAGE LUG TERMINAL	●	450	150~600	−20~+55
FW	LEAD WIRE TERMINAL	●	330	10~300	−20~+60
CDF	FOR FLASH LAMPS	●	360 450	60~400 40~300	−25~+70

◎CAUTION

These Rubycon Photo Flash Capacitors are designed, manufactured and intended solely for use in photo flash and other photographic equipment.
They are not intended for use in medical equipment.
Rubycon Corporation, Rubycon America, Inc., and Shin-Ei Capacitor Foil Company, Ltd. expressly disclaim any warranties or representations as to the suitability or fitness of these capacitors for use in medical equipment.

SXC SERIES

105℃ , Overvoltage Vent Operation Facility, Snap-in Terminal Type

◆FEATURES

- Load Life : 105℃ 2000 hours.
- This series has specification of vent operation in overvoltage situation. Please consult us for any further details.
- RoHS compliance.

勝 特 力 材 料 886-3-5753170
胜特力电子(上海) 86-21-34970699
胜特力电子(深圳) 86-755-83298787
Http://www.100y.com.tw

◆SPECIFICATIONS

Items	Characteristics
Category Temperature Range	−25～+105℃
Rated Voltage Range	200, 400V.DC
Capacitance Tolerance	±20% (20℃, 120Hz)
Leakage Current(MAX)	$I=3\sqrt{CV}$ (After 5 minutes application of rated voltage) I=Leakage Current(μA) C=Rated Capacitance(μF) V=Rated Voltage(V)
(tanδ) Dissipation Factor(MAX)	0.15(20℃, 120Hz)
Impedance Ratio(MAX)	Rated Voltage (V): 200 / 400 (120Hz) Z(−25℃)/Z(20℃): 3 / 8
Endurance	After applying rated voltage with rated ripple current for 2000hrs at 105℃, the capacitors shall meet the following requirements. Capacitance Change: Within ±20% of the initial value. Dissipation Factor: Not more than 200% of the specified value. Leakage Current: Not more than the specified value.

◆MULTIPLIER FOR RIPPLE CURRENT

Frequency coefficient

Frequency (Hz)		60(50)	120	500	1k	10k ≦
Coefficient	200WV	0.80	1.00	1.10	1.14	1.18
	400WV	0.80	1.00	1.05	1.10	1.15

◆PART NUMBER

□□□	SXC	□□□□□	□	□□□	SN	D×L
Rated Voltage	Series	Rated Capacitance	Capacitance Tolerance	Option	Terminal Code	Case Size

◆Option

	Code
PET Sleeve without plate	EFC
PVC Sleeve without plate	OOE
PVC Sleeve with plate	Blank

◆DIMENSIONS

(mm)

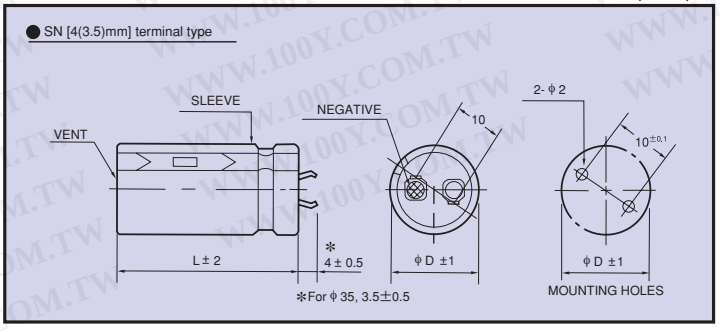

◆STANDARD SIZE

WV / Cap (μF) \ φD	200									
	φ20		φ22		φ25		φ30		φ35	
82	20×20	0.42								
100	20×20	0.47	22×20	0.51						
120	20×20	0.52	22×20	0.56						
150	20×25	0.69	22×25	0.69	25×20	0.63				
180	20×25	0.75	22×25	0.75	25×20	0.70				
220	20×30	0.87	22×25	0.88	25×25	0.88	30×20	0.85		
270	20×35	1.00	22×25	0.99	25×25	0.99	30×20	0.95		
330	20×40	1.20	22×30	1.20	25×25	1.20	30×20 30×25	1.05 1.20	35×20	1.08
390			22×35	1.30	25×30	1.34	30×25	1.30	35×20	1.15
470			22×40	1.44	25×30	1.44	30×25	1.48	35×25	1.48
560			22×45	1.60	25×35	1.60	30×30	1.60	35×25	1.58
680					25×40	1.76	30×30	1.74	35×25	1.74
820							30×35	2.11	35×30	2.10
1000							30×45	2.40	35×30 35×35	2.30 2.30
1200									35×35 35×40	2.65 2.65
1500									35×45	3.08

WV / Cap (μF) \ φD	400									
	φ20		φ22		φ25		φ30		φ35	
22	20×20	0.20								
27	20×20	0.22	22×20	0.23						
33	20×20	0.25	22×20	0.25						
39	20×25	0.35	22×20	0.28	25×20	0.30				
47	20×25	0.39	22×25	0.39	25×20	0.34				
56	20×30	0.44	22×25	0.45	25×20 25×25	0.39 0.45	30×20	0.41		
68	20×35	0.51	22×25	0.49	25×25	0.49	30×20	0.45		
82	20×40	0.57	22×30	0.56	25×25	0.56	30×20 30×25	0.50 0.56	35×20	0.51
100			22×35	0.62	25×30	0.61	30×25	0.59	35×20	0.54
120			22×40	0.73	25×30	0.73	30×25	0.73	35×20	0.61
150			22×45	0.85	25×35	0.85	30×30	0.79	35×25	0.78
180					25×40	0.94	30×30	0.95	35×25	0.95
220					25×45	1.07	30×35	1.24	35×30	1.24
270							30×35 30×40	1.35 1.30	35×35	1.28
330							30×45	1.47	35×35	1.41
390									35×40	1.59
470									35×45	1.87

Ripple Current (A r.m.s./120Hz, 105℃)

Case Size φD×L(mm)

WWW.100Y.COM.TW