HONDA TSUSHIN KOGYO CO., LTD.

Dual-purpose vertical and horizontal type plastic case MR-( )LW+

RoHS

Rectangular connector
Case
Dual-purpose vertical and horizontal type
Spring lock

● **Configuration of product Part No.**

MR- ( ) LW+
① ② ③

① Series name
② No. of contacts: 8, 16, 20, 25, 34, 50 or 60
③ Type of case: Dual-purpose vertical and horizontal type

勝 特 力 材 料 886-3-5753170
胜特力电子(上海) 86-21-34970699
胜特力电子(深圳) 86-755-83298787
Http://www.100y.com.tw

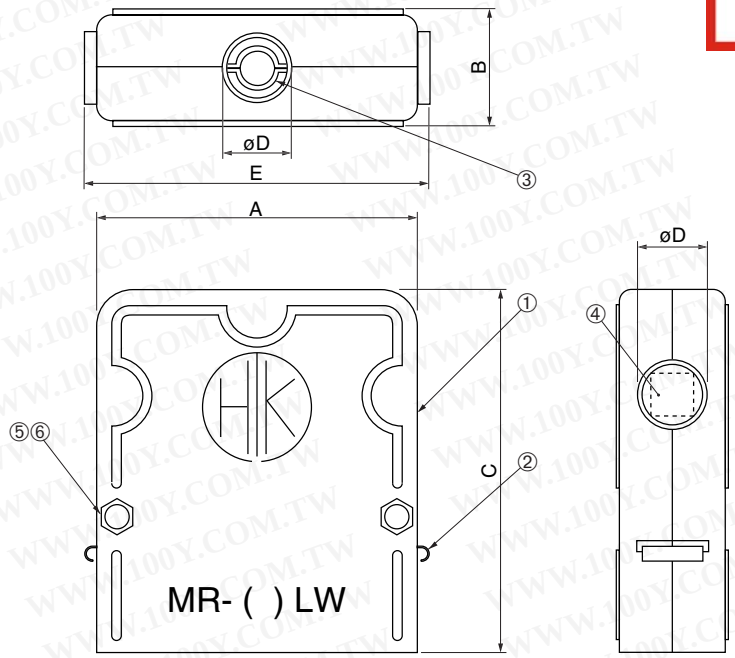

Note 1: Plate spring for latching is not provided for the MR-8LW+ products.

● **Components**

①	Case body
②	Spring lock
③	Cable clamp
④	Cap
⑤	Small-sized Phillips head screw
⑥	Hexagon nut

Note 2: In the MR-8LW+ plastic case, the male or female connectors with mounting hardware, such as MR-8RM( ) or MR-8RF( ), which have an "R" sign at the head of the M or F in the Product Part No., may not be used.

● **Dimensions**

Part No.	A	B	C	D	E
MR-8LW+	25.6	17	38.0	6.0	—
MR-16LW+	36.7		47.0	9.0	(42.3)
MR-20LW+	39.3	18		11.0	(44.9)
MR-25LW+	44.5	19	56.0	13.5	(50.1)
MR-34LW+	52.3		58.3	15.0	(57.9)
MR-50LW+	67.9	20	66.1	16.0	(73.5)
MR-60LW+	66.9	22	68.0	18.0	(71.7)

Applicable connectors: Female : MR-(8~60)F( ), MR-(8~60)FW( ), MRP-( )F01
Male : MR-(8~60)M( ), MR-(8~60)MW( ), MRP-( )M01

Mating connectors: Female : MR-8F( ), MR-8FW( ), MR-8FD2( )
MR-(16~60)RF( )+, MR-(16~60)RFW( )+, MR-(16~50)RFD2( )+, MR-(16~50)RFA( )+
Male : MR-8M( ), MR-8MW( ), MR-8MD2( )
MR-(16~60)RM( )+, MR-(16~60)RMW( )+, MR-(16~50)RMD2( )+, MR-(16~50)RMA( )+

Through hole | SMT | Press-in | IDC | Soldering | Crimping | Wire wrapping | Others