THE NEW VALUE FRONTIER

KYOCERA

连接器简介

CONNECTORS GUIDE

KYOCERA ELCO Corporation

CONNECTORS GUIDE

通过系列号的检索,请参照卷末的目录。 **CONTENTS**

■FPC / FFC — Page 02-21

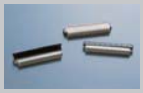

FPC / FFC - 0.2mm	◎ 6246	**Page 02**
FPC / FFC - 0.3mm	◎ 6295 / 6296 / 6283 / 6285	**Page 03-04**
	◎ 6281 / 6267 / 6243	**Page 05-06**
FPC / FFC - 0.4mm	◎ 6286	**Page 06**
FPC / FFC - 0.5mm	◎ 6299 / 6277	**Page 07**
	◎ 6298 / 6250 / 6252 / 6270 / 6272	**Page 08**
	◎ 6238 / 6249	**Page 09**
	◎ 6292 / 6254	**Page 10**
	◎ 6239 / 6269 / 6240 / 6284	**Page 11**
	◎ 6222 / 6223	**Page 12**
	◎ 6210 / 6212 / 6260 / 6262	**Page 12**
	◎ 6266 / 6214 / 6274 / 6244	**Page 13**
FPC / FFC- 0.8mm	◎ 6268	**Page 14**
	◎ 6278	**Page 14**
	◎ 6206	**Page 15**
	◎ 6218	**Page 15**
FPC / FFC - 1.0mm	◎ 6237	**Page 16**
	◎ 6227	**Page 16**
	◎ 6200 / 6224	**Page 16**
	◎ 6228	**Page 17**
	◎ 6232	**Page 17**
	◎ 6226	**Page 18**
	◎ 6208	**Page 18**
	◎ 6231 / 6248 / 6229	**Page 19**
FPC / FFC - 1.25mm	◎ 6207 / 8370 / 6216	**Page 20**
	◎ 5062 / 6203 / 6205	**Page 21**

■板对板连接器 / BOARD TO BOARD — Page 22-34

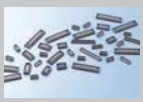

SUPER MICRO LEAF - 0.4mm	◎ 5801	**Page 23**
	◎ 5805	**Page 24**
	◎ 5605	**Page 25**
	◎ 5602	**Page 26**
SUPER MICRO LEAF - 0.5mm	◎ 5604	**Page 27**
	◎ 5645	**Page 27**
	◎ 5087 / 5046 / 5047	**Page 27**
	◎ 5603	**Page 28**
MICRO LEAF - 0.5mm	◎ 5607	**Page 29**
	◎ 5042	**Page 29**
MICRO LEAF - 0.8mm	◎ 5609	**Page 30**
	◎ 5608	**Page 30**
	◎ 5600	**Page 30**
MICRO LEAF - 1.0mm	◎ 5078 / 5077	**Page 31**
MICRO LEAF - 1.27mm	◎ 5061 / 5072	**Page 32**
MEZZANINE CARD	◎ 5015	**Page 33**
POST & BOX	◎ 9072	**Page 33**
TIN PLATED BtoB	◎ 5082	**Page 34**
	◎ 8283 BtoB	**Page 34**

■电路切换用连接器 / SWITCHING — Page 35

SWITCHING	◎ 8261	**Page 35**
	◎ 9067	**Page 35**
	◎ 8387	**Page 35**

■背板连接器 / BACK PLANE — Page 36-40

DIN	◎ 8272 / 8331 / 8332 / 8345	**Page 36**
	◎ 8455	**Page 37**
HARD METRIC	◎ 8071	**Page 37**

HARD METRIC	◎ 8072	Page 38
	◎ 8073	Page 38
	◎ 8074 / 8075	Page 39
	◎ 8077	Page 39
	◎ 9203	Page 39
HIGH DENSITY	◎ 8378	Page 40
	◎ 8377	Page 40

■线对板连接器和线对线连接器 / WIRE to WIRE / BOARD — Page 41-50

POWER SUPPLY	◎ 9110	Page 41
	◎ 9090	Page 41
	◎ 5090	Page 41
RACK & PANEL	◎ 8016	Page 42
	◎ 8017	Page 42
	◎ 8026	Page 42
	◎ 8027	Page 42
	◎ 8014	Page 43
	◎ 8024	Page 43
	◎ 8029	Page 43
	◎ 8223	Page 43
GOLD PLATED WtoW / B	◎ 9021	Page 44
TIN PLATED WtoW / B	◎ 8083	Page 45
	◎ 8263	Page 45
	◎ 8263（中継用）	Page 46
	◎ 8283	Page 46
	◎ 8283IDC	Page 46
	◎ 9073	Page 47
	◎ 9073IDC	Page 47
MINIATURE WtoB	◎ 8040	Page 48
	◎ 8000	Page 49
	◎ 8005	Page 49
	◎ 8015	Page 50

■存储卡连接器 / MEMORY CARD — Page 50-54

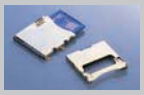

MEMORY CARD	◎ 5025	Page 50
	◎ 5027 / 5069	Page 51
	◎ 5610 / 5620 / 5611 / 5612 / 5038	Page 52
	◎ 5638 / 5338	Page 53
	◎ 5036 / 5738	Page 54

■插座/边缘卡连接器 / CARD EDGE — Page 55-57

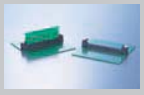

SO - DIMM SOCKET	◎ 6402	Page 55
	◎ 6401	Page 55
	◎ 6403	Page 55
DDR SOCKET	◎ 6406	Page 56
Mini-PCI Express Card Connectors	◎ 6407	Page 56
Mini-PCI	◎ 6405	Page 57

■屏蔽输入/输出(I/O)连接器 — Page 57-59

INTERFACE - I / O	◎ 5123	Page 57
	◎ 5124	Page 58
	◎ 5031	Page 58
	◎ 5121	Page 59
	◎ 5141	Page 59

■其他 / OTHERS — Page 60-64

AUTOMOTIVE	◎ 9215	Page 60
	◎ 9515	Page 60
MICROPHONE HOLDER	◎ 9198	Page 61
SHIELD LOCK	◎ 8069	Page 62
POWER TERMINAL	◎ 9069	Page 63
PRESS - FIT PIN	◎ 6330 / 8242	Page 63
COAXIAL	◎ 5367	Page 64

FPC/FFC Connectors FPC/FFC连接器

京瓷爱克的FPC/FFC连接器系列中有可在狭小的空间内易于进行锁条开关操作的ZIF（零插入力）结构、用轻微的力即可直接插入FPC/FFC的LIF（低插入力）结构以及良好经济性能的NON-ZIF结构等。嵌合严密，作业性能得到了显著提高。有单式、复式、SMT(表面贴装技术)、DIP(双列直插式封装)、直式、弯式等各种形式。收存在符合EIAJ标准和JIS标准的压纹带或料盒等中，可以自动装配。

Our FPC/FFC connector series has a wide variety of design line-up like ZIF (Zero Insertion Force) type, LIF (Low Insertion Force) type for easy insertion of FPC/FFC and NON-ZIF type. These types enables the firm mating and improves drastically the operability. In addition, Single, Double, SMT, DIP, Straight and Right Angle connectors are prepared in its abundant variation.
They are offered in EIAJ, JIS standards emboss tape or magazine and designed for automounting.

PRODUCT SELECTOR GUIDE

	SMT				DIP					
	直式 Straight Type		弯式 Right Angle Type		直式 Straight Type		弯式 Right Angle Type		底部接入式 Bottom Entry	直接接入式 Direct
系列 Series	ZIF	NON-ZIF	ZIF	NON-ZIF	ZIF	NON-ZIF	ZIF	NON-ZIF	ZIF	
0.2 mm pitch			6246							
0.3 mm pitch			6243 6285 6255 6295 6267 6296 6281							
0.4 mm pitch			6286							
0.5 mm pitch	6214 6274	6244 6266	6210 6260 6212 6262 6236 6269 6238 6270 6239 6272 6240 6277 6249 6292 6250 6298 6252 6299	6222 6223 6254						
0.8 mm pitch		6218	6268 6278	6206						
1.0 mm pitch	6208 6229 6248	6226 6231 6232	6200 6224 6237	6227 6232	6208 6229	6232	6200	6228 6232		
1.25 mm pitch		6207		6207	6205	6216 8370		6216 8370	6203	5062

0.2mm Spacing 0.2mm 间距(FPC/FFC 连接器)

Series 6246

系列名称(SERIES)	6246
极数(NO. OF CONTACTS)	30～80
高度(HEIGHT)	1.85mm
间距(PITCH)	0.2mm
额定电流(CURRENT)	AC/DC 0.2A CONTACT
额定电压(VOLTAGE)	AC/DC 50V CONTACT
耐压值(D.W. VOLTAGE)	200Vrms/min
适用FPC厚度	0.15mm
触点(CONTACT)	double

Series 6246

◆概要

6246系列是适应高密度安装要求和小型化要求而开发的行业首个间距0.2mm、高度1.85mm、超低背、双面触点型、双面FPC连接器。(适用FPC厚度：0.15±0.03mm)

◆特点

(1) 采用端部收存在外形尺寸内的“无引线型”，节省了空间。

(2) 双面触点结构，通过采用双面FPC，确保了与FPC的可靠接触。

(3) 在FPC插入口的反方向，通过旋转锁条而锁紧FPC，针对作用在FPC上的上下弯曲和拔出力，采用了防止锁条开放的结构。

(4) 考虑到减少生产线的工时，锁条以开放状态交货。

(5) 交货形式为2000粒／卷盘的压纹带捆扎品。

◆Outline

Series 6246 is a 0.2mm-pitch the first in the industry. 1.85mm height of very low profile connector for a double-sided FPC, which was developed to meet the needs of high-density mounting and downsizing. (Applicable thickneess of an FPC : 0.15±0.03mm)

◆Features

(1)The "leadles" structure is adopted in which tails are contained in the outer package to sabe space.

(2)The double-faced contacts assure the contact reliability in connecting with double-sided FPC's.

(3)In order to prevent the slider from unlocking and releasing the FPC by the stress caused by FPC flection and/ore the withdraual force applied to the FPC, the slider turns in the poopsite direction of the opening for FPC insertion and locks.

(4)The connectors will be delivered with the sliders unlocked so that the production labor could be reduced.

(5)2000 connectors are packaged in an reel with embossed tape when delivered.

0.3mm Spacing 间距0.3mm（FPC/FFC 连接器）

Series 6295

系列名称(SERIES)	6295
极数(NO. OF POSITIONS)	17-61
高度(HEIGHT)(PROFILE HEIGHT)	0.9mm
间距(PITCH)	0.3mm
额定电流(CURRENT)	AC/DC 0.2A CONTACT
额定电压(VOLTAGE)	AC/DC 50V CONTACT
耐压值(D.W. VOLTAGE)	250 Vrms/min
适用FPC厚度(APPLICABLE FPC THICKNESS)	0.15mm
触点(CONTACT)	Bottom

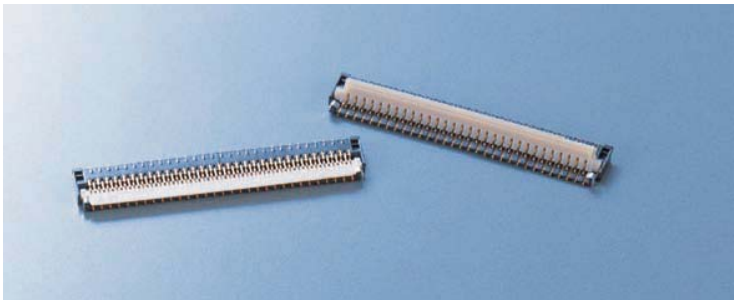

Series 6295

◆概要

这是一款适应市场上蜂窝电话、PHS小型化以及高密度安装的要求而开发的间距0.3mm、高度0.9mm、超低背型FPC连接器。宽度也只有3.5mm，实现了小型化，与本公司其他产品（6285系列、21极）相比较，安装面积仅为54%，体积仅为45%，大大节省了空间。

◆特点

(1) 为提高作业效率，采用了无锁条脱落的结构，增强了锁条操作的牢固性，为单指操作型连接器。
(2) 装备了防止FPC被拉动的金属保持件，可防止产生将FPC向垂直方向拉出时对锁条的负荷，提高了可靠性。
(3) 采用尾部交错式排列，可进行焊点检查和修复。
(4) 虽然为超低背型，因为有底部隔板，仍可确保绝缘性能。
(5) 采用环保型无铅焊锡，同时采取了防止芯吸的措施。

◆Outline

Series 6295 is ultra low profile 0.3mm pitch, Right Angle, Flip-top style, SMT connector. With a total height of 0.9mm it is develop based on the request for downsizing and high density mounting of Cellular Phones and PDA's in the market. A reduction of 54% is achieved for the mounting space ratio, and the volume ratio is decreased by 45%. The Foot print is also reduced from existing products.

◆Features

(1)Flip-top style mechanism locks the flexible cable in place and gives a click feeling when closed in order to improve the workability.
(2)Equipped with metal strain relief tabs that prevent an FPC from being pulled vertically out of the connector.
(3)With staggered pin out, making tracking and inspection easier.
(4)In spite of the very low profile design, there is no prohibited area for tracking under the connector.
(5)Lead free and anti solder wicking.

Series 6296

系列名称(SERIES)	6296
极数(NO. OF POSITIONS)	11～51
高度(HEIGHT)	1mm
间距(PITCH)	0.3mm
额定电流(CURRENT)	AC/DC 0.2A CONTACT
额定电压(VOLTAGE)	AC/DC 50V CONTACT
耐压值(D.W. VOLTAGE)	200 Vrms/min
适用FPC厚度(APPLICABLE FPC THICKNESS)	0.2mm
触点(CONTACT)	Bottom

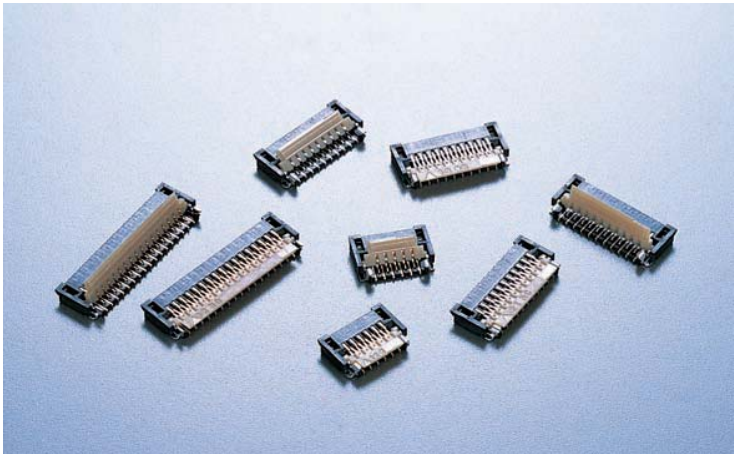

Series 6296

6296系列是适应小型化和多功能化要求的手持设备而开发的低背、省空间型FPC连接器。

虽然是低背，仍可适用于0.2mm的FPC。同时备有两种型号：根据FPC的拉出方式，带有抗跳脱的保持型金属固定件型号和带有标准型金属固定件型号。

Series 6296 is low profile, space saving type, 0.3mm pitch, FPC connector designed for portable equipment requiring down sizing and becoming multifunctional. In spite of its low profile, it is applied to FPC of 0.2mm thickness. Depending on how the FPC is laid, two types of the connector are available, one is with anti-flip holding-type metal tab and the other is with standard type metal tab.

0.3mm Spacing 间距0.3mm（FPC/FFC 连接器）

Series 6283

系列名称(SERIES)	6283
极数(NO. OF POSITIONS)	17～51
高度(PROFILE HEIGHT)	1.1mm
间距(PITCH)	0.3mm
额定电流(CURRENT)	AC/DC 0.2A CONTACT
额定电压(VOLTAGE)	AC/DC 50V CONTACT
耐压值(D.W. VOLTAGE)	200 Vrms/min
适用FPC厚度(APPLICABLE FPC THICKNESS)	0.2mm
触点(CONTACT)	Top

Series 6283

6283系列连接器是适应市场上设备小型化和高密度安装的要求而开发的间距0.3mm、高度1.1mm、全行业体积最小的省空间设计、背锁式（上接点）连接器。

适用FPC厚度为0.2±0.03mm，不仅适用于手机、DSC、DVC、LCD模块，还可广泛应用在其他设备上。

Series 6283 connector is a rear-flip-lock-type connector of top contacts, 0.3mm-pitch, 1.1mm height with the smallest in volume that is developed based on the market requirements of downsizing and higher density package.
It is a connector used for connection with an FPC of 0.2±0.03mm in thickness, which enables use in wider range of application besides DSC, DVC, and LCD modules.

Series 6285

系列名称(SERIES)	6285
极数(NO. OF POSITIONS)	17～61
高度(HEIGHT)	1.1mm
间距(PITCH)	0.3mm
额定电流(CURRENT)	AC/DC 0.2A CONTACT
额定电压(VOLTAGE)	AC/DC 50V CONTACT
耐压值(D.W. VOLTAGE)	250 Vrms/min
适用FPC厚度(APPLICABLE FPC THICKNESS)	0.15mm
触点(CONTACT)	Bottom

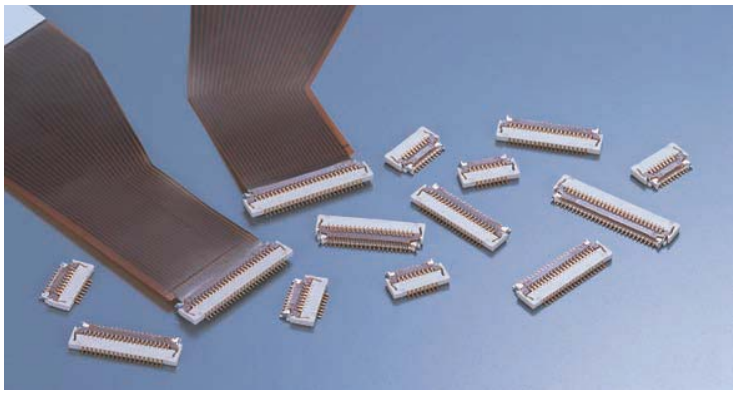

Series 6285

6285系列为ZIF直角型（下触点）、高度1.1mm、间距0.3mm的单指锁定型FPC连接器。

虽然是电路板上高度1.1mm的低背型，但在结构上背面并没有露出触点，通过设在FPC插入口的导向机构，提高了向FPC上方的保持力，同时也可防止向左右方向的嵌合偏移。

Series 6285 is 0.3mm pitch, ZIF, Right Angle, bottom contact, Flip-top style FPC connector. It has a height of 1.1mm designed to meet the requirement of the miniaturization of portable equipment in the market. It is also designed to utilize the progress of packaging technology, and the trend of narrower pitch, and the increasing pin count of the connector. This connector is generally used in Mobile PC, Slim Notebook-PC, Cellular Phone, PHS, DVC, DSC, MD, and complex machines in which several of these applications are incorporated.

0.3mm Spacing 0.3mm间距（FPC/FFC 连接器）

Series 6281

系列名称(SERIES)	6281
极数(NO. OF POSITIONS)	17～81
高度(HEIGHT)	1.25mm
间距(PITCH)	0.3mm
额定电流(CURRENT)	AC/DC 0.2A CONTACT
额定电压(VOLTAGE)	AC/DC 50V CONTACT
耐压值(D.W. VOLTAGE)	200V rms/min
适用FPC厚度(APPLICABLE FPC THICKNESS)	0.3mm
触点(CONTACT)	Bottom

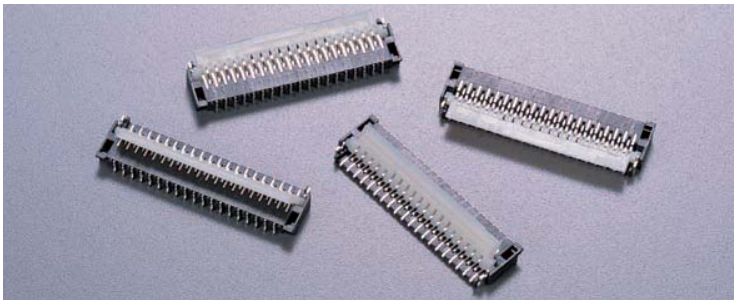

Series 6281

◆概要

6281系列连接器是适应市场上设备小型化和高密度安装的要求而开发的间距0.3mm、高度1.25mm、ZIF锁定型（下接点）连接器。

本产品采用长度尺寸3.7mm的省空间设计，适用FPC厚度为0.2±0.03mm，不仅适用于DSC、DVC、LCD模块，还可广泛应用在超薄型DVD驱动器等其他设备上。

◆特点

（1）本产品为单指锁定型（one touch lock）连接器，能够提高作业效率，并采用了防止锁条（SLD）脱落的结构。
（2）适用于从17极到81极的各种极数。
（3）备有FPC引导件装备以及非装备两种型号的式样，由顾客选择。提高了FPC拉扯的作业性。
（4）采用在后方接点尾部引脚上设有缺口的独特设计，提高了无铅锡膏的焊接性。

◆Outline

Series 6281 is bottom contact, ZIF, flip-top style connector with 0.3mm pitch and 1.25mm height designed to meet the market requirements of downsizing and high-density packaging. This connector can be used for a wide range of applications including DVD Drives, LCD Modules and Hand Held Devices.
Designed for automatic mounting machine, packed in tape and reel.

◆Features

(1)One touch locking mechanism is adopted to prevent the actuator from coming off to improve efficiency in working operation.
(2)Various number of positions are available from 17 to 81.
(3)It is available with or without FPC guide that is identified by the part number. Workability in laying the FPC is increased.
(4)The unique shape of rear contact tail that has a notch is adopted, which improves the solderability for the lead-free solder.

Series 6267

系列名称(SERIES)	6267
极数(NO. OF POSITIONS)	65
高度(HEIGHT)	1.8mm
间距(PITCH)	0.3mm
额定电流(CURRENT)	AC/DC 0.2A CONTACT
额定电压(VOLTAGE)	AC/DC 50V CONTACT
耐压值(D.W. VOLTAGE)	250 Vrms/min
适用FPC厚度(APPLICABLE FPC THICKNESS)	0.15mm
触点(CONTACT)	Bottom

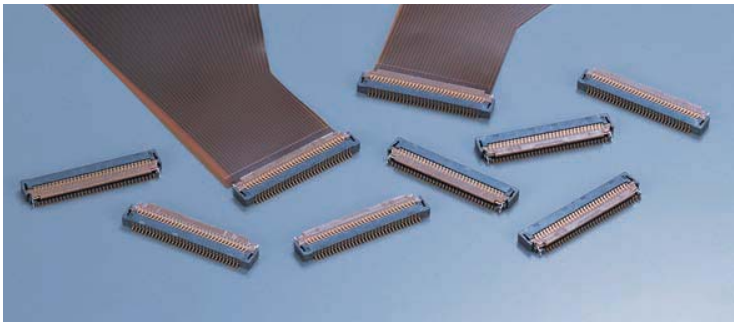

Series 6267

◆概要

这是ZIF直角型（下触点）高度1.8mm、间距0.3mm的单指锁定型FPC连接器。

在结构上背面没有露出触点。采用了提升式结构的ZIF结构。FPC容易插入，接触性能可靠。使用了防止芯吸的触点。虽然是镀金的，但可确保有很大的保持力。通过设在FPC插入口的导向机构，提高了向FPC上方的保持力，同时也可防止向左右方向的嵌合偏移。

◆Outline

Series 6267 is 0.3mm pitch, ZIF, Right Angle, bottom contact, Flip-top style FPC connector. It has a profile height of 1.8mm to meet the miniaturization requirement of portable equipment in the market.
It is also designed to utilize the progress of packaging technology, the trend of narrower pitch, and the increasing pin counts in the connector.
Designed for the automatic mounting machine, packaged in tape and reel.

0.3mm Spacing 0.3mm间距（FPC/FFC 连接器）

Series 6243

系列名称(SERIES)	6243
极数(NO. OF POSITIONS)	65
高度(HEIGHT)	1.8mm
间距(PITCH)	0.3mm
额定电流(CURRENT)	AC/DC 0.2A CONTACT
额定电压(VOLTAGE)	AC/DC 50V CONTACT
耐压值(D.W. VOLTAGE)	250 Vrms/min
适用FPC厚度(APPLICABLE FPC THICKNESS)	0.15mm
触点(CONTACT)	Top

Series 6243

6243系列为ZIF直角型（上触点）、高度1.8mm、间距0.3mm的滑动锁定型FPC连接器。

在结构上背面没有露出触点。采用了0.3mm间距的交错形状。不需要金属固定件，节省空间。具有接触性能可靠的滑动锁定型锁条结构。结构上可保证减低FPC插入时的锁条插拔力，且可增强FPC的保持力。

Series 6243 is 0.3mm pitch, ZIF, Right Angle, top contact, slide, FPC connector. It has a profile height of 1.8mm to meet the miniaturization requirement of portable equipment in the market. It is also designed to utilize the progress of packaging technology, the trend of narrower pitch, and high pin count of the connection. Incorporates an original guiding mechanism to increase upward retention force, preventing mating misalignment in the side-to-side direction.
Contacts designed to prevent solder wicking, securing a larger retention force regardless of the Gold-plating.
Slider configured to reduce insertion and separation forces when FPC inserted, and structured to strengthen the FPC retention force.

0.4mm Spacing 0.4mm间距(FPC/FFC 连接器)

Series 6286

系列名称(SERIES)	6286
极数(NO. OF POSITIONS)	80、96
高度(HEIGHT)	3.5mm
间距(PITCH)	0.4mm
额定电流(CURRENT)	AC/DC 0.3A CONTACT
额定电压(VOLTAGE)	AC/DC 50V CONTACT
耐压值(D.W. VOLTAGE)	150 Vrms/min
适用FPC厚度(APPLICABLE FPC THICKNESS)	0.3mm
触点(CONTACT)	Bottom

Series 6286

6286系列是为适应高密度、省空间要求的数字式AV设备的内部连接而开发的间距0.4mm、多极、ZIF、直角型FPC连接器。

由于在锁条上面保证有充分的吸附面，在锁条开放状态下即可吸附。

大幅度减少了向设备组装时和检查所需的工时。

Series 6286 is 0.4mm pitch, ZIF, Right Angle type, high pin count FPC connector that has designed for internal connection of Digital AV apparatus requiring high density and space saving.
As this has enough area for vacuum nozzle on the top side of the actuator, it is possible to be mounted with the slider opened, which largely reduces work operation in building in the equipment and the inspection.

0.5mm Spacing 0.5mm间距(FPC/FFC 连接器)

Series 6299

系列名称(SERIES)	6299
极数(NO. OF POSITIONS)	5～50
高度(HEIGHT)	0.9mm
间距(PITCH)	0.5mm
额定电流(CURRENT)	AC/DC 0.4A CONTACT
额定电压(VOLTAGE)	AC/DC 50V CONTACT
耐压值(D.W. VOLTAGE)	200 Vrms/min
适用FPC厚度(APPLICABLE FPC THICKNESS)	0.2mm
触点(CONTACT)	Bottom

Series 6299

6299系列是针对小型手持设备而开发的间距0.5mm、高度0.9mm、ZIF、直角型、单指锁定型FPC连接器。

可实现设备的薄型化。

Series 6299 is ultra low profile, 0.5mm pitch, ZIF, SMT FPC / FFC connector, which has very small footprint. It is developed to meet the requirement of miniaturization of portable equipment. Total height is 0.9mm, Flip-top style locking actuator.

Series 6277

系列名称(SERIES)	6277
极数(NO. OF POSITIONS)	3～6
高度(HEIGHT)	0.9mm
间距(PITCH)	0.5mm
额定电流(CURRENT)	AC/DC 0.4A CONTACT
额定电压(VOLTAGE)	AC/DC 50V CONTACT
耐压值(D.W. VOLTAGE)	200 Vrms/min
适用FPC厚度(APPLICABLE FPC THICKNESS)	0.2mm
触点(CONTACT)	Dual

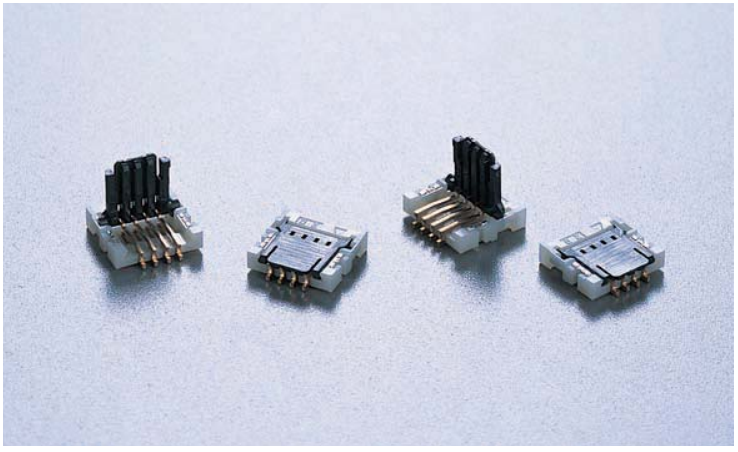

Series 6277

6277系列是针对小型手持设备的液晶显示装置而开发的间距0.5mm、ZIF、直角型、高度0.9mm的超低背、省空间型FPC连接器。

采用了容易装卸FPC的背锁式锁条，同时采用了FPC的止动机构，防止脱落。

Series 6277 is 0.5mm pitch, ZIF, dual sided contact, Right Angle type FPC connector with a super low profile, 0.9mm in height, which is designed for LCD of small size portable equipment.
The performance to prevent the FPC from being released is improved by adopting Rear Locking type flip-top actuator that realizes easy connection and disconnection of FPC and the FPC stopper structure.

0.5mm Spacing 0.5mm间距(FPC/FFC 连接器)

Series 6298

系列名称(SERIES)	6298
极数(NO. OF POSITIONS)	3～9
高度(HEIGHT)	0.9mm
间距(PITCH)	0.5mm
额定电流(CURRENT)	AC/DC 0.4A CONTACT
额定电压(VOLTAGE)	AC/DC 50V CONTACT
耐压值(D.W. VOLTAGE)	200 Vrms/min
适用FPC厚度(APPLICABLE FPC THICKNESS)	0.2mm
触点(CONTACT)	Bottom

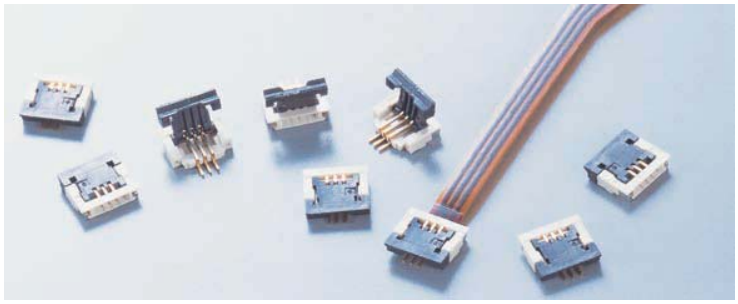

Series 6298

◆概要

6298系列是适应市场上蜂窝电话、PHS液晶显示装置模块的背光小型化要求而开发的ZIF直角型、高度0.9mm、间距0.5mm、单指锁定型FPC连接器。

◆特点

(1) 间距0.5mm、高度0.9mm的超低背、省空间型连接器。
(2) 通过锁条和FPC的特殊形状，虽然极很小但具有较高的FPC保持力。
(3) 具有锁条背锁型防止锁条开放功能。锁条容易打开。
(4) 这是可提高作业效率的单指操作型连接器，增强了锁条锁定的牢固性。
(5) 带有可以牢固安装的金属保持件。

◆Outline

Series 6298 is ultra low profile connector specially designed for LCD (Liquid Crystal Display) modules with back-light requirements. Bottom contact, 0.5mm pitch, Right Angle, SMT, 0.9mm high, ZIF. Flip-top style connector. Notched FPC accurately ensures correct location into connector.

◆Features

(1)Space saving 0.5mm pitch connector with extremely low profile design of 0.9mm
(2)Special configuration of actuator and FPC contributing to high FPC retention force for its small position
(3)Actuator back-lock type with anti-unlock function.Easy to open.
(4)One-touch type connector to increase operational efficiency. Sharp clicking response is guaranteed when slider is locked.
(5)Equipped with holding metals for secure mounting

Series 6250
Series 6252
Series 6270
Series 6272

系列名称(SERIES)	6250／6252／6270／6272	
极数(NO. OF POSITIONS)		5～34
高度(PROFILE HEIGHT)		0.9mm
间距(PITCH)		0.5mm
额定电流(CURRENT)		AC/DC 0.4A CONTACT
额定电压(VOLTAGE)		AC/DC 50V CONTACT
耐压值(D.W. VOLTAGE)		200 Vrms/min
适用FPC厚度(APPLICABLE FPC THICKNESS)		0.2mm
触点(CONTACT)	6250,6270	Bottom
	6252,6272	Top

6270/6272;镀金
(Gold-Plating)

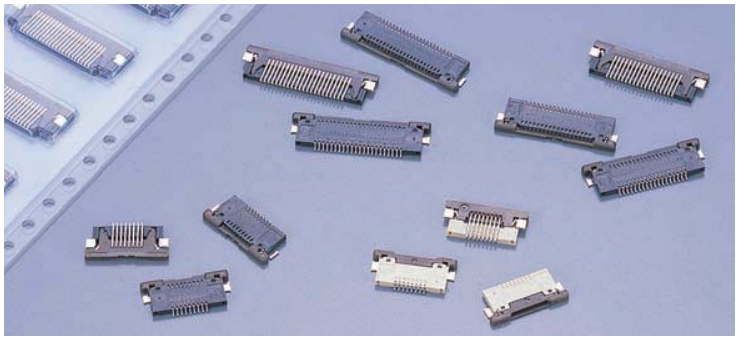

Series 6250/6252/6270/6272

◆概要

6250/6252系列是高度0.9mm、间距0.5mm的FPC用ZIP型连接器。

6250系列为下触点型，6252系列为上触点型，均带有金属固定件。

◆特点

(1) 金属固定件采用了锁定锁条的结构。减小了外形尺寸，且可实现牢固锁定。
(2) 滑动型锁条结构加金属固定件，提高了剥离强度。
(3) 下触点的6250系列，其FPC容易插入，改善了作业性能。

◆Outline

Series 6250 / 6252 is developed to meet the market demand for the miniaturization of portable hand held equipment. The connector has an ultra low profile of 0.9mm high and 0.5mm pitch, SMT, ZIF.
Series 6250 / 6270 are bottom contact type and Series 6252 / 6272 are top contact type. All series are equipped with metal tab.

◆Features

(1)Easy and secure slider locking for its small outside dimension
(2)Equipped with the new concept of slider structure and fixing metal for the improvement of peeling strength
(3)Series 6250, bottom contact type , designed for the easy insertion of FPC contributing to the operability of the connector

0.5mm Spacing 0.5mm间距(FPC/FFC 连接器)

Series 6238

系列名称(SERIES)	6238
极数(NO. OF POSITIONS)	5～50
高度(PROFILE HEIGHT)	1.1mm
间距(PITCH)	0.5mm
额定电流(CURRENT)	AC/DC 0.4A CONTACT
额定电压(VOLTAGE)	AC/DC 50V CONTACT
耐压值(D.W. VOLTAGE)	200 Vrms/min
适用FPC厚度(APPLICABLE FPC THICKNESS)	0.3mm
触点(CONTACT)	Bottom

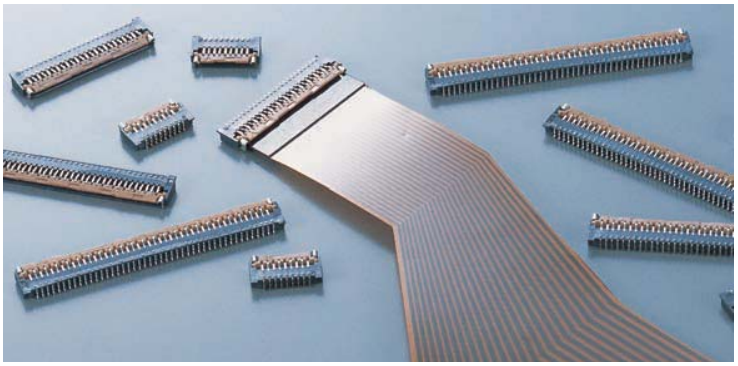

Series 6238

◆概要

6238系列是适应市场上PC和数字式AV设备小型化的要求而开发的ZIF直角型、高度1.1mm、间距0.5mm、单指操作型FPC连接器。(适应FPC厚度：0.3mm)

在笔记本电脑、DVD（数码摄像机)、DSC（数码照相机）等数字式AV设备的市场中具有广泛的用途。

◆特点

(1) 这是间距0.5mm、高度1.1mm的低背型连接器，与本公司同类产品相比安装面积仅为41.79%，属省空间型连接器。

(2) 为了提高作业效率，设计了无锁条脱落的结构，增强了锁条操作的牢固性，为单指操作型连接器。

(3) 装备了防止FPC被拉动的金属保持件，提高了垂直方向的FPC保持力（带金属件可牢固安装，提高了可靠性)。

(4) 采用环保型无铅焊锡，同时也采取了防止芯吸的措施。

◆Outline

Series 6238 is developed to meet the requirements of hand held equipment market for downsizing. This FPC type connector is a Right Angle, ZIF, 1.1mm high, 0.5mm pitch with Flip-top style locking which opens to a maximum of 135 degrees. This connector is suitable for wide-ranging devices including Notebook-PC, DVC(Digital Video Camera), DSC(Digital Still Camera) and Digital AV apparatus.

◆Features

(1)0.5mm pitch FPC connector with low profile of 1.1mm reducing the mounting area of our current products as much as 41.79%

(2)The operational efficiency of this one-touch type connector has been increased by the structure to prevent actuator from falling off and also by the excellent clicking response in actuator operation

(3)Equipped with hold-down metal with anti-flip FPC guide function to stabilize the position of FPC(Secured mounting with metal tabs and increased reliability)

(4)Environmentally friendly,lead-free specification leading to the prevention of solder migration.

Series 6249

系列名称(SERIES)	6249
极数(NO. OF POSITIONS)	5～30
高度(PROFILE HEIGHT)	1.2mm
间距(PITCH)	0.5mm
额定电流(CURRENT)	AC/DC 0.4A CONTACT
额定电压(VOLTAGE)	AC/DC 50V CONTACT
耐压值(D.W. VOLTAGE)	200 Vrms/min
适用FPC厚度(APPLICABLE FPC THICKNESS)	0.18mm, 0.2mm
触点(CONTACT)	Bottom

Series 6249

6249系列是高度1.2mm、间距0.5mm、ZIF、单指锁定型FPC连接器。为现有6239系列（下触点）的低背型。虽然是低背型，但在结构上背面并没有露出触点，因而没有图案禁止区域，这是6249系列的一大特点。

可适用于0.17mm、0.2mm的FPC。

Series 6249 is 0.5mm pitch, ZIF, Right Angle SMT style FPC / FFC connector, with Flip-top style locking.
Ultra low profile of 1.2mm to comply with the market demand for miniaturization of portable equipment.
Applicable FPC thickness is 0.18mm or 0.2mm.

0.5mm Spacing 0.5mm间距(FPC/FFC 连接器)

Series 6292

系列名称(SERIES)	6292
极数(NO. OF POSITIONS)	5～30
高度(PROFILE HEIGHT)	1.2mm
间距(PITCH)	0.5mm
额定电流(CURRENT)	AC/DC 0.4A CONTACT
额定电压(VOLTAGE)	AC/DC 50V CONTACT
耐压值(D.W. VOLTAGE)	200 Vrms/min
适用FPC厚度(APPLICABLE FPC THICKNESS)	0.3mm
触点(CONTACT)	Top

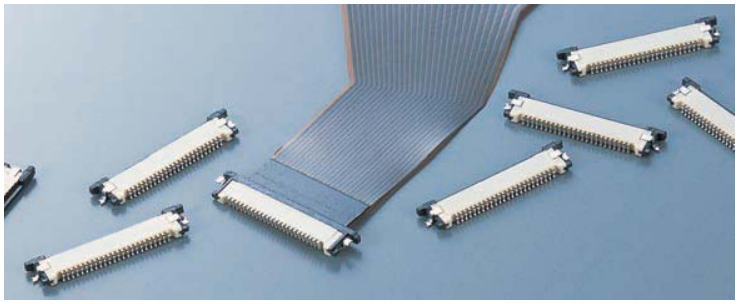

Series 6292

◆概要

6292系列是适应市场上PC和数字式AV设备小型化的要求而开发的ZIF直角型、高度1.2mm、间距0.5mm、滑动型FPC连接器（适应FPC厚度:0.3mm)。

在笔记本电脑、DVD（数码摄像机)、DSC（数码照相机）等数字式AV设备的市场中具有广泛的用途。

◆特点

(1) 这是间距0.5mm、高度1.2mm的低背型连接器，与本公司同类产品相比安装面积仅为63.83%，属省空间型连接器。
(2) 是具有牢固接触性能的滑动型连接器，同时也具有防止锁条过度开放功能，属低插拔型。
(3) 带有可牢固安装的金属保持件。

◆Outline

Series 6292 is develop to meet the down sizing requirements of the PC and Digital AV apparatus markets. This slide-type 0.5mm pitch FPC connector has specific characters of Right Angle, ZIF and 1.2mm height. The connector is applicable for wide-ranging devices including Notebook-PC, DVC(Digital Video Camera), DSC(Digital Still Camera) and small hand held devices.

◆Features

(1)0.5mm pitch FPC connector with low profile of 1.2mm reducing the mounting area of our current products as much as 63.83%
(2)Slide type for secure contact performance equipped with the structure to prevent the slider from falling off
(3)Equipped with holding metals for secure mounting

Series 6254

系列名称(SERIES)	6254
极数(NO. OF POSITIONS)	5～20
高度(PROFILE HEIGHT)	1.2mm
间距(PITCH)	0.5mm
额定电流(CURRENT)	AC/DC 0.4A CONTACT
额定电压(VOLTAGE)	AC/DC 50V CONTACT
耐压值(D.W. VOLTAGE)	200 Vrms/min
适用FPC厚度(APPLICABLE FPC THICKNESS)	0.3mm
触点(CONTACT)	dual

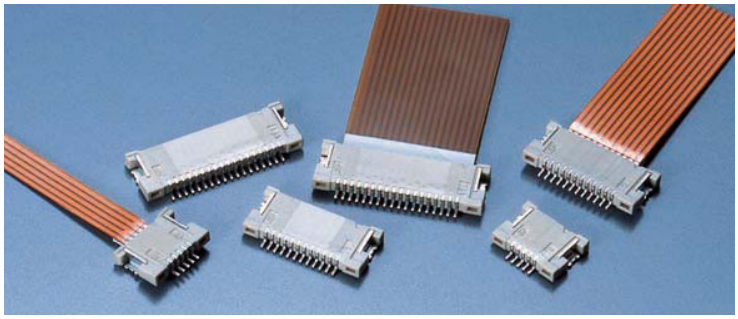

Series 6254

◆概要

这是间距0.5mm、NON－ZIF直角型、双面触点型的FPC连接器。电路板上的高度为1.2mm，低背型设计。

◆特点

(1) 触点部交错排列，低插拔规格。
(2) 带有可牢固安装的金属保持件。从上方将金属件压入，提高了对电路板的抓附牢固性。该结构保证了具有很高的剥离强度。
(3) 虽然是电路板上高度1.2mm的低背型，但可适用于厚度0.3mm的FPC。

◆Outline

Series 6254 is 0.5mm pitch, LIF, Right Angle FFC / FPC connector with dual sided contact, It's low profile 1.2mm high design. It has been developed to meet the market demands for the miniaturization of portable equipment.

◆Features

(1)Staggered pattern of contacts area contribute low-insertion and low-separation force.
(2)Press -fitting of side metals from above makes the fixing connectors on the board secure.Optimized design for the improvement of peeling strength.
(3)Low profile type (height is 1.2mm) enable to connect 0.3mm FPC connectors.

0.5mm Spacing 0.5mm间距(FPC/FFC 连接器)

Series 6239
Series 6269
Series 6240

系列名称(SERIES)	6239/6240/6269
极数(NO. OF POSITIONS)	6239 (5～30) 6240 (6～54)
高度(PROFILE HEIGHT)	6239 1.5mm 6240 2.0mm
间距(PITCH)	0.5mm
额定电流(CURRENT)	6239/6240 AC/DC 0.4A CONTACT 6269 AC/DC 5mA/0.4A CONTACT
额定电压(VOLTAGE)	AC/DC 50V CONTACT
耐压值(D.W. VOLTAGE)	200 Vrms/min
适用FPC厚度(APPLICABLE FPC THICKNESS)	0.3mm
6269:机动性碳精棒对应	(C/Ag type)
触点(CONTACT)	Bottom

Series 6239、6240、6269

这是只需要一个手指就可以锁定或解除锁定、间距0.5mm、ZIF、直角型、单指锁定型连接器。利用锁条可以牢固锁定，同时也改善了在狭小空间中的作业性能。

电路板上的高度，6239系列（5～30极）为1.5mm，6240系列（30～50极）为2.0mm，系低背型，均可自动装载，为2000粒/卷盘的压纹带捆扎品。

Series 6239, 6240 and 6269 are low profile 0.5mm pitch ZIF, Right Angle, SMT, Flip-top style, FPC / FFC connectors. 6239 and 6269 series are 1.5mm high and available in 5-30 positions. 6240 series is 2.0mm high and available in 6-54 positions. Designed for automatic mounting machine, packaged in tape and reel.
6269 series is C/Ag version and Gold-Plated.

Series 6284

系列名称(SERIES)	6284
极数(NO. OF POSITIONS)	5～30
高度(PROFILE HEIGHT)	1.5mm
间距(PITCH)	0.5mm
额定电流(CURRENT)	AC/DC 0.4A CONTACT
额定电压(VOLTAGE)	AC/DC 50V CONTACT
耐压值(D.W. VOLTAGE)	AC 200 Vrms/min
适用FPC厚度(APPLICABLE FPC THICKNESS)	0.3mm
触点(CONTACT)	Dual

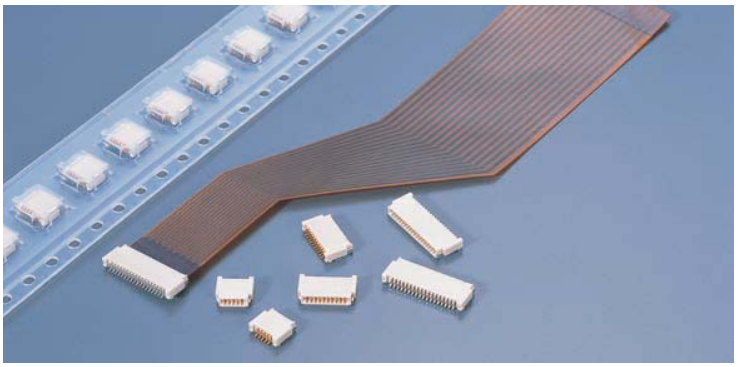

Series 6284

◆概要

6284系列连接器是间距0.5mm、高度1.5mm、长度4.0mm的低高度、NON-ZIF型的连接器。

6284系列产品实现了低成本，除了应用于数码化电器市场的小型设备外，还可广泛应用于多方面市场的设备和机器。

◆特点

（1）采用了两面接点。提高了零部件选定以及机器结构设计时的简易性。
（2）适用于从5极到30极的各种极数。
（3）接点构造采用了交错式排列的NON-ZIF构造，在实现了FPC低插入力的同时还具有高度的保持力。
（4）适用FPC/FFC厚度,采用了通用的t=0.3±0.05mm式样。

◆Outline

Series 6284 is a low-profile and LIF type FPC connector with 0.5mm-pitch, 1.5mm in height and 4.0mm in depth.
It is low-cost and applicable not only to downsized digital home electric appliances but also to versatile applications.

◆Features

(1)"Dual-sided contact" is adopted to improve workability in part approval operation and easiness in designing devices.
(2)Various number of positions are available from 5 to 30.
(3)LIF structure with staggered contacts layout achieves the high force to retain FPC in spite of requiring low insertion force.
(4)Applicable thickness of FPC to be connected is t=0.3±0.05mm that is a general specification.

0.5mm Spacing 0.5mm间距(FPC/FFC 连接器)

Series 6222
Series 6223

系列名称(SERIES)	6222/6223
极数(NO. OF POSITIONS)	6222(5～40) 6223(5～30)
高度(PROFILE HEIGHT)	1.95mm
间距(PITCH)	0.5mm
额定电流(CURRENT)	AC/DC 0.4A CONTACT
额定电压(VOLTAGE)	AC/DC 50V CONTACT
耐压值(D.W. VOLTAGE)	200 Vrms/min
适用FPC厚度(APPLICABLE FPC THICKNESS)	0.3mm
触点(CONTACT)	6222 Bottom 6223 Top

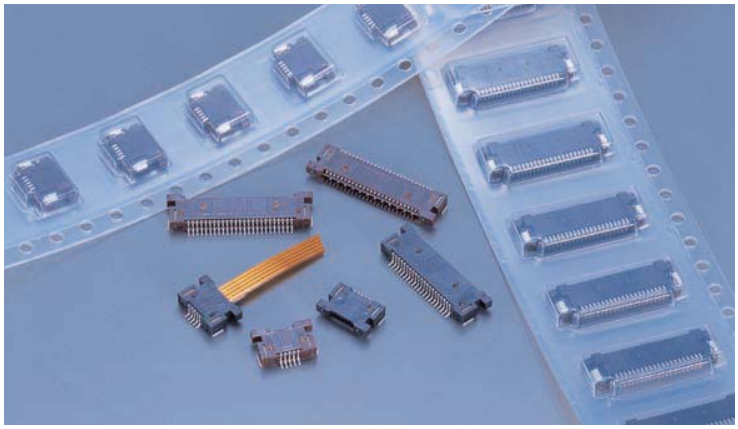

Series 6222、6223

这是间距0.5mm的LIF型连接器。电路板上的高度为2.0mm。6222系列为下触点型，6223系列为上触点型，均带有金属固 定件。可自动装载，为2000粒／卷盘的压纹带捆扎品。

Series 6222 and 6223 are low profile, 0.5mm pitch, LIF, SMT, FFC / FPC connectors. Series 6222 is bottom contact and Series 6223 is top contact. Both have a total height of 1.95mm. Designed for automatic mounting machine, packaged in tape and reel.

Series 6210
Series 6212
Series 6260
Series 6262

系列名称(SERIES)	6210/6212/6260/6262
极数(NO. OF POSITIONS)	5～40
高度(PROFILE HEIGHT)	2.0mm
间距(PITCH)	0.5mm
额定电流(CURRENT)	AC/DC 0.4A CONTACT
额定电压(VOLTAGE)	AC/DC 50V CONTACT
耐压值(D.W. VOLTAGE)	200 Vrms/min
适用FPC厚度(APPLICABLE FPC THICKNESS)	0.3mm
触点(CONTACT)	6210,6260 Bottom 6212,6262 Top

6260/6262；机动性碳精棒对应（C/Ag type）

Series 6210, 6212, 6260, 6262

这是间距0.5mm的ZIF直角型连接器。利用锁条可以牢固锁定。电路板上的高度为2.0mm，为超低背型。6210系列为下触点型，6212系列为上触点型，均带有金属固定件。可自动装载，为2000粒／卷盘的压纹带捆扎品。

Series 6210, 6260, 6212, 6262, are low profile SMT, ZIF, with a slider lock flexible cable into the connector and a total height of 2.0mm. Series 6210 and 6260 have a bottom contact, 6212 and 6262 have a top contact. Designed for automatic mounting machine, packaged in tape and reel.(2,000 pieces/reel)
6260 and 6262 are C / Ag version and Gold-Plated.

0.5mm Spacing 0.5mm间距(FPC/FFC 连接器)

Series 6266

系列名称(SERIES)	6266
极数(NO. OF POSITIONS)	5～13
高度(PROFILE HEIGHT)	3.5mm
间距(PITCH)	0.5mm
额定电流(CURRENT)	AC/DC 0.4A CONTACT
额定电压(VOLTAGE)	AC/DC 50V CONTACT
耐压值(D.W. VOLTAGE)	200 Vrms/min
适用FPC厚度(APPLICABLE FPC THICKNESS)	0.3mm
触点(CONTACT)	dual

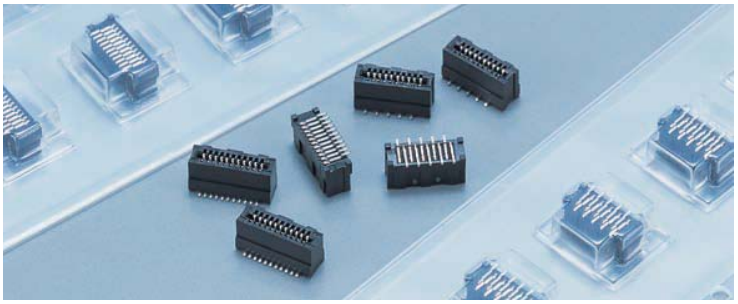

Series 6266

这是间距0.5mm、LIF结构、双面触点、垂直型连接器。虽然是垂直型，电路板上的高度为3.5mm，为超低背型。

Series 6266 is dual sided contact, 0.5mm pitch, Vertical Mount, SMT, LIF connector. Dual staggered and single sided pad layout options are offered. Total connector height for both versions is 3.5mm.

Series 6214
Series 6274

系列名称(SERIES)	6214,6274
极数(NO. OF POSITIONS)	6214: 6～40 6274:31～50
高度(PROFILE HEIGHT)	6214＝4.1mm 6274＝4.4mm
间距(PITCH)	0.5mm
额定电流(CURRENT)	AC/DC 0.4A CONTACT
额定电压(VOLTAGE)	AC/DC 50V CONTACT
耐压值(D.W. VOLTAGE)	200 Vrms/min
适用FPC厚度(APPLICABLE FPC THICKNESS)	0.3mm
触点(CONTACT)	single

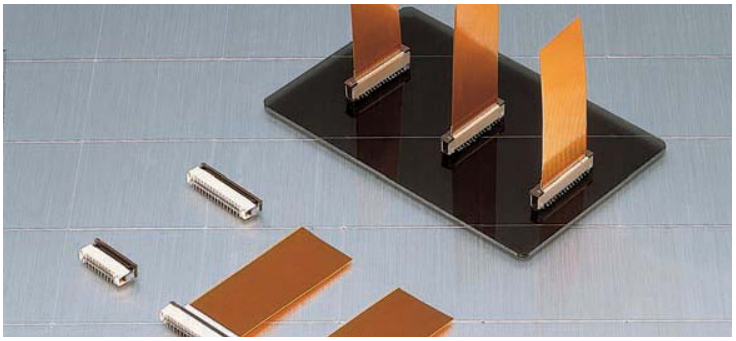

Series 6214、6274

这是间距0.5mm的ZIF结构连接器，为垂直型。利用锁条可以牢固锁定。电路板上的高度，6214为4.1mm，6274为4.4mm。可自动装载，为1000粒／卷盘的压纹带捆扎品。同时还备有带吸附板（自动装载用）的型号。

A vertical-type connector with ZIF structure for 0.5mm pitch FPC. A slider provides a reliable locking system.
A vertical-type of connector is only 6214 =4.1mm,6274=4.4mm in height on the P.C. board. We can provide a connector with a plate which is used for vacuum by automatic mounting machine.(1,000 pieces / reel)

Series 6244

系列名称(SERIES)	6244
极数(NO. OF POSITIONS)	6～26
高度(PROFILE HEIGHT)	4.1mm
间距(PITCH)	0.5mm
额定电流(CURRENT)	AC/DC 0.4A CONTACT
额定电压(VOLTAGE)	AC/DC 50V CONTACT
耐压值(D.W. VOLTAGE)	200 Vrms/min
适用FPC厚度(APPLICABLE FPC THICKNESS)	0.3mm
触点(CONTACT)	single

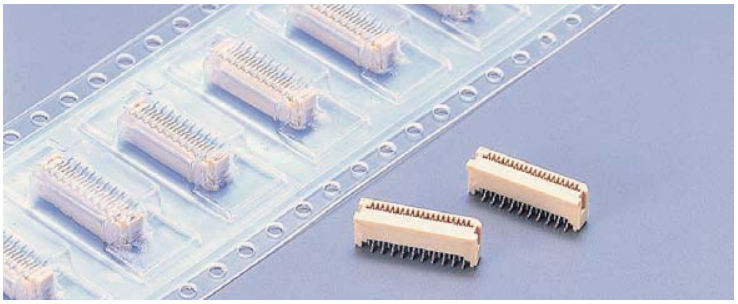

Series 6244

这是间距0.5mm、LIF结构、垂直型连接器。可以自动装载，在连接器上面确保有吸附面。为1000粒／卷盘的压纹带捆扎品。

Series 6244 is 0.5mm pitch, LIF, Vertical, SMT, FPC / FFC connector. Designed for automatic mounting machine, packaged in tape and reel.

0.8mm Spacing 0.8mm间距(FPC/FFC 连接器)

Series 6268

系列名称(SERIES)	6268
极数(NO. OF POSITIONS)	34
高度(PROFILE HEIGHT)	1.9mm
间距(PITCH)	0.8mm
额定电流(CURRENT)	AC/DC 5mA/0.4A CONTACT
额定电压(VOLTAGE)	AC/DC 5V CONTACT
耐压值(D.W. VOLTAGE)	100 Vrms/min
适用FPC厚度(APPLICABLE FPC THICKNESS)	0.3mm
触点(CONTACT)	Bottom

Series 6268

◆概要

6268系列是为笔记本电脑等内部连接而开发的间距0.8mm、24极～34极、ZIF直角型（上触点）、高度1.9mm、适用于碳浆FPC的滑动锁定型FPC连接器。

节省空间，适用于移动PC、薄型笔记本电脑、DVD（数码摄像机）、DSC（数码照相机）、MD等所有组合设备。

◆Outline

Series 6268 is 0.8mm pitch 34 positions Right Angle, ZIF, bottom contact connector, with the profile height of 2.0mm, which accommodates C/Ag paste FPC and designed to have the slide locking function. It is also developed for the internal connection of Notebook-PC.

It can be widely applied to the market of mobile PC, slim type Notebook-PC, DVC (Digital Video Camera), DSC (Digital Still Camera) and complex machine of these applications.

◆Features

(1)Equipped with metal tab to secure the firm mounting.
(2)Contact configuration designed for C/Ag paste FPC
(3)In spite of the multiple position design, it requires a low force for insertion and separation.

Series 6278

系列名称(SERIES)	6278
极数(NO. OF POSITIONS)	34
高度(PROFILE HEIGHT)	1.9mm
间距(PITCH)	0.8mm
额定电流(CURRENT)	AC/DC 5mA/0.4A CONTACT
额定电压(VOLTAGE)	AC/DC 5V CONTACT
耐压值(D.W. VOLTAGE)	100 Vrms/min
适用FPC厚度(APPLICABLE FPC THICKNESS)	0.3mm
触点(CONTACT)	Top

Series 6278

◆概要

6278系列是为笔记本电脑等内部连接而开发的间距0.8mm、34极、ZIF直角型（上触点）、高度2.0mm、适用于碳浆FPC的滑动锁定型FPC连接器。

适用于移动PC、薄型笔记本电脑、DVD（数码摄像机）、DSC（数码照相机）、MD及其组合设备。

◆特点

(1) 金属保持件可保证牢固安装。
(2) 可自动装载，为2000粒／卷盘的压纹带捆扎品。
(3) 触点形状适应碳浆/银浆FPC。
(4) 虽然为34极的多极结构，但可实现低插拔。

◆Outline

Series 6278 is 0.8mm pitch 34 positions Right Angle, ZIF, Top contact connector, with the body height of 1.9mm, which accommodates C/Ag paste FPC and designed to have the slide locking function. It is also developed for the internal connection of Notebook-PC.

It can be widely applied to the market of mobile PC, slim type Notebook-PC, DVC (Digital Video Camera), DSC (Digital Still Camera) and complex machine of these applications.

◆Features

(1)Equipped with metal tab to secure the firm mounting.
(2)Contact configuration designed for C/Ag paste FPC
(3)In spite of the multiple position design, it requires a low force for insertion and separation.

0.8mm Spacing 0.8mm间距(FPC/FFC 连接器)

Series 6206

系列名称(SERIES)	6206
极数(NO. OF POSITIONS)	4～20
高度(PROFILE HEIGHT)	2.0mm
间距(PITCH)	0.8mm
额定电流(CURRENT)	AC/DC 0.5A CONTACT
额定电压(VOLTAGE)	AC/DC 50V CONTACT
耐压值(D.W. VOLTAGE)	500 Vrms/min
适用FPC厚度(APPLICABLE FPC THICKNESS)	0.3mm
触点(CONTACT)	dual

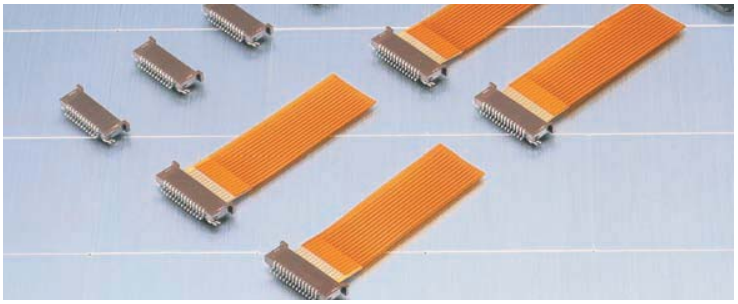

Series 6206

这是间距0.8mm的SMT直角型连接器。高度为2.0mm，为超低背型。带有金属固定件，可以牢固安装。连接器为1000粒/卷盘的压纹带（JIS标准）捆扎品。

Series 6206 is low profile, 0.8mm pitch, SMT, Right Angle, dual sided LIF connector with a total height of 2.0mm. Designed for automatic mounting machine, packaged in tape and reel.(1,000 pieces/reel)

Series 6218

系列名称(SERIES)	6218
极数(NO. OF POSITIONS)	10
高度(PROFILE HEIGHT)	3.5mm
间距(PITCH)	0.8mm
额定电流(CURRENT)	AC/DC 0.5A CONTACT
额定电压(VOLTAGE)	AC/DC 50V CONTACT
耐压值(D.W. VOLTAGE)	500 Vrms/min
适用FPC厚度(APPLICABLE FPC THICKNESS)	0.3mm
触点(CONTACT)	dual

Series 6218

这是为FDD而开发的间距0.8mm的FPC用双面型10极连接器。可以自动装载，压纹带包装。

Series 6218 is 0.8mm pitch, Vertical mount, dual row, dual sided contact, 10 position, SMT, FPC / FFC connector. Designed for automatic mounting machine, packaged in tape and reel.

1.0mm Spacing 1.0mm间距(FPC/FFC 连接器)

Series 6237

系列名称(SERIES)	6237
极数(NO. OF POSITIONS)	16,28,30
高度(PROFILE HEIGHT)	2.0mm
间距(PITCH)	1.0mm
额定电流(CURRENT)	AC/DC 0.5A CONTACT
额定电压(VOLTAGE)	AC/DC 50V CONTACT
耐压值(D.W. VOLTAGE)	500 Vrms/min
适用FPC厚度(APPLICABLE FPC THICKNESS)	0.3mm
触点(CONTACT)	Bottom

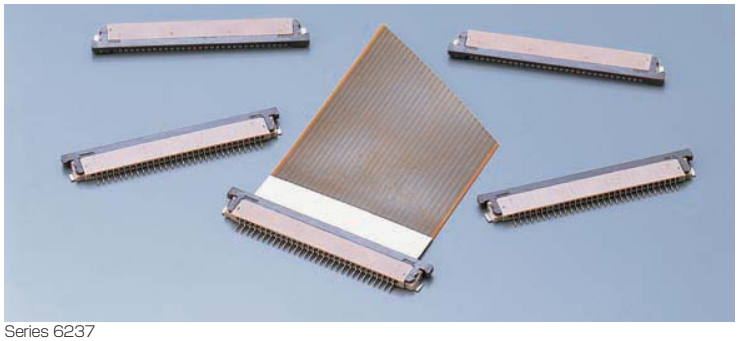

Series 6237

这是间距1.0mm、直角型、ZIF、SMT型连接器。电路板上的高度为2.0mm，为超低背型。可以自动装载，为1000粒/卷盘的压纹带捆扎品。

Series 6237 is 1.0mm pitch, Right Angle, bottom contact, ZIF, SMT type. Profile height is as low as designs 2.0mm. Designed for automatic mounting machine, packaged in tape and reel. (1,000 pieces/reel)

Series 6227

系列名称(SERIES)	6227
极数(NO. OF POSITIONS)	4～20
高度(PROFILE HEIGHT)	2.0mm
间距(PITCH)	1.0mm
额定电流(CURRENT)	AC/DC 1A CONTACT
额定电压(VOLTAGE)	AC/DC 50V CONTACT
耐压值(D.W. VOLTAGE)	500 Vrms/min
适用FPC厚度(APPLICABLE FPC THICKNESS)	0.3mm
触点(CONTACT)	dual

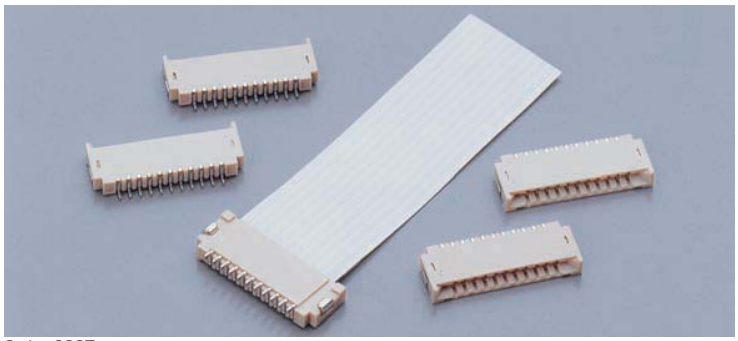

Series 6227

这是间距1.0mm、直角型的NON-ZIF、SMT型连接器。触点为音叉型双面触点结构，电路板上的高度为2.0mm，为超低背型。

Series 6227 is 1.0mm pitch Right Angle, LIF, Vertical, SMT connector with tuning folk style dual sided contact. It has a low profile height of 2.0mm.

Series 6200
Series 6224

系列名称(SERIES)	6200/6224
极数(NO. OF POSITIONS)	5～30
高度(PROFILE HEIGHT)	2.9mm
间距(PITCH)	1.0mm
额定电流(CURRENT)	AC/DC 1A CONTACT
额定电压(VOLTAGE)	AC/DC 50V CONTACT
耐压值(D.W. VOLTAGE)	500 Vrms/min
适用FPC厚度(APPLICABLE FPC THICKNESS)	0.3mm
触点(CONTACT)	6200 Bottom 6224 Top

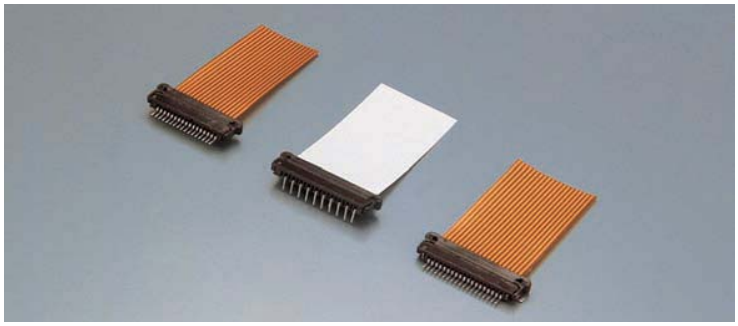

Series 6200、6224

这是间距1.0mm、ZIF型连接器。电路板上的高度只有2.9mm。通过锁条的开关而可以牢固锁定。有SMT定位头、SMT金属件、SMT金属件/定位头以及DIP型。6200系列为下触点型（SMT、DIP），6224系列为上触点型（SMT）。

Series 6200/6224 are 1.0mm pitch Right Angle, ZIF connector with 2.9mm profile height. Secure lock can be obtained by opening / closing the retaining slider. Available in the SMT with boss, SMT with mounting metal, SMT with mounting metal / boss, Through Hole type for 6200 only.

1.0mm Spacing 1.0mm间距（FPC/FFC 连接器）

Series 6228

系列名称(SERIES)	6228
极数(NO. OF POSITIONS)	3～30
高度(PROFILE HEIGHT)	3.0mm
间距(PITCH)	1.0mm
额定电流(CURRENT)	AC/DC 0.5A CONTACT
额定电压(VOLTAGE)	AC/DC 50V CONTACT
耐压值(D.W. VOLTAGE)	500 Vrms/min
适用FPC厚度(APPLICABLE FPC THICKNESS)	0.3mm
触点(CONTACT)	Top

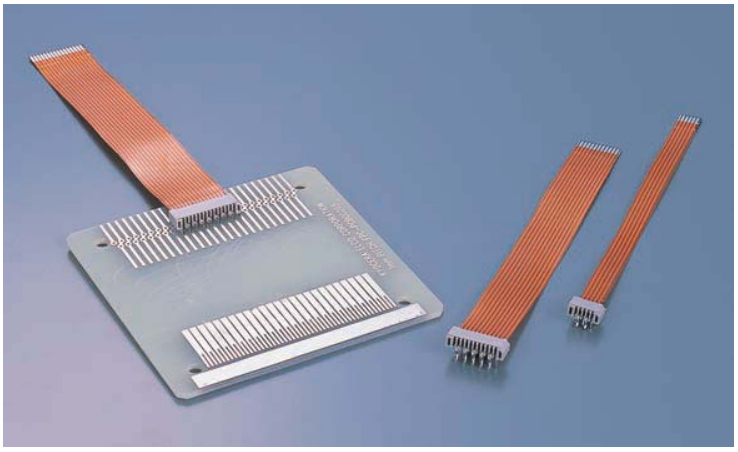

Series 6228

这是间距1.0mm、NON－ZIF、直角型、上触点DIP型连接器。

Series 6228 is 1.0mm pitch, LIF, Right Angle, top contact, Through Hole type connector.

Series 6232

系列名称(SERIES)	6232
极数(NO. OF POSITIONS)	3～30
高度(PROFILE HEIGHT)	RA : 3.0mm Vertical,Through Hole: 5.5mm Vertical,SMT : 5.1mm
间距(PITCH)	1.0mm
额定电流(CURRENT)	AC/DC 0.5A CONTACT
额定电压(VOLTAGE)	AC/DC 50V CONTACT
耐压值(D.W. VOLTAGE)	500 Vrms/min
适用FPC厚度(APPLICABLE FPC THICKNESS)	0.3mm
触点(CONTACT)	RA: Top,Bottom Vertical: single

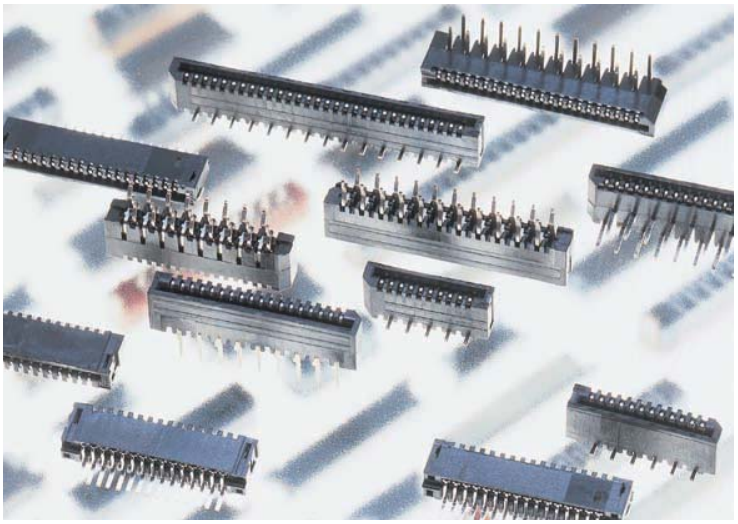

Series 6232

这是追求经济性、间距1.0mm、NON－ZIF型连接器。

备有SMT型＝垂直、直角（上触点/下触点），DIP型＝垂直、直角（下触点）等类型。

SMT型可自动装载，压纹带包装。

Series 6232 is 1.0mm pitch, LIF, cost advantage design. Available variation are SMT / Through Hole version. SMT version is Vertical, Right Angle, top contact, bottom contact. Through Hole version is Vertical, Right Angle, bottom contact only. The SMT version can be packed in tape and reel for automatic mounting.

1.0mm Spacing 1.0mm间距（FPC/FFC 连接器）

Series 6226

系列名称(SERIES)	6226
极数(NO. OF POSITIONS)	4～20
高度(PROFILE HEIGHT)	3.5mm
间距(PITCH)	1.0mm
额定电流(CURRENT)	AC/DC 1A CONTACT
额定电压(VOLTAGE)	AC/DC 50V CONTACT
耐压值(D.W. VOLTAGE)	500 Vrms/min
适用FPC厚度(APPLICABLE FPC THICKNESS)	0.3mm
触点(CONTACT)	dual

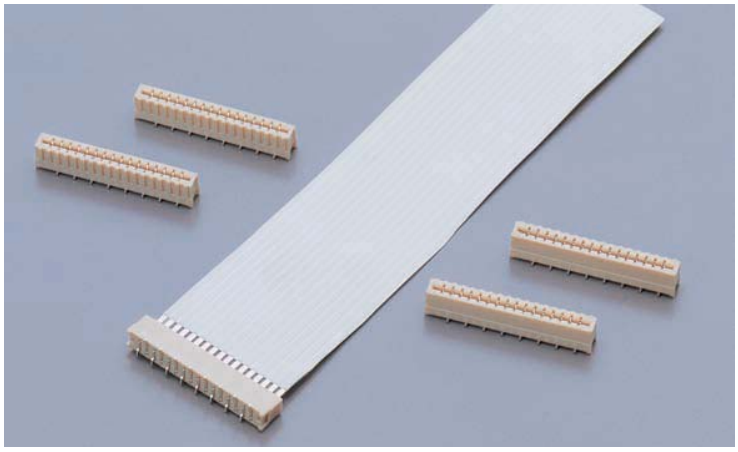

Series 6226

这是间距1.0mm、垂直型NON－ZIF、SMT连接器。触点为音叉型双面触点结构，电路板上的高度为3.5mm，低背型设计。

Series 6226 is 1.0mm pitch, LIF Vertical, SMT connector with tuning folk style dual sided contact. It has a low profile height of 3.5mm.

Series 6208

系列名称(SERIES)	6208
极数(NO. OF POSITIONS)	5～30
高度(PROFILE HEIGHT)	5～19P:5.0mm 20～25P:5.2mm 26～30P:5.5mm
间距(PITCH)	1.0mm
额定电流(CURRENT)	AC/DC 1A CONTACT
额定电压(VOLTAGE)	AC/DC 50V CONTACT
耐压值(D.W. VOLTAGE)	500 Vrms/min
适用FPC厚度(APPLICABLE FPC THICKNESS)	0.3mm
触点(CONTACT)	single

Series 6208

这是间距1.0mm、ZIF垂直型的连接器。备有SMT型和DIP型。SMT型可自动装载，压纹带包装。

Series 6208 is 1.0mm pitch, ZIF, Vertical Mount, FFC and FPC connector, which is available in both SMT and Through Hole versions. The SMT version can be packed in tape and reel for automatic mounting.

1.0mm Spacing 1.0mm间距（FPC/FFC 连接器）

Series 6231

系列名称(SERIES)	6231
极数(NO. OF POSITIONS)	26
高度(PROFILE HEIGHT)	5.5mm
间距(PITCH)	1.0mm
额定电流(CURRENT)	AC/DC 1A CONTACT
额定电压(VOLTAGE)	AC/DC 50V CONTACT
耐压值(D.W. VOLTAGE)	500 Vrms/min
适用FPC厚度(APPLICABLE FPC THICKNESS)	0.3mm
触点(CONTACT)	single

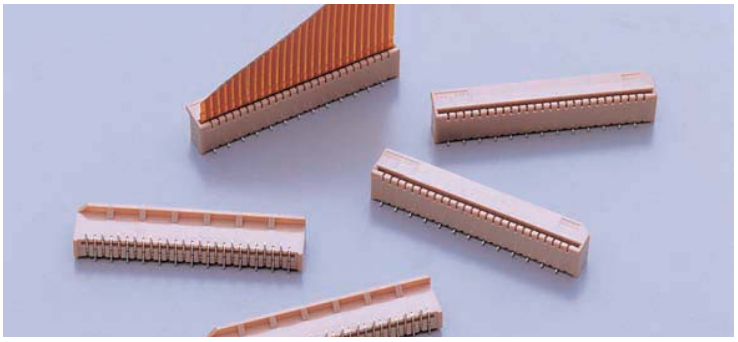

Series 6231

这是间距1.0mm、LIF、垂直型的SMT连接器。通过LIF结构形成多极、NON—ZIF型连接器。

Series 6231 is 1.0mm pitch LIF, Vertical, SMT connector enabling high pin count, which takes low-insertion force structure.

Series 6248

系列名称(SERIES)	6248
极数(NO. OF POSITIONS)	19,22,24,30
高度(PROFILE HEIGHT)	5.5mm
间距(PITCH)	1.0mm
额定电流(CURRENT)	AC/DC 0.5A CONTACT
额定电压(VOLTAGE)	AC/DC 50V CONTACT
耐压值(D.W. VOLTAGE)	500 Vrms/min
适用FPC厚度(APPLICABLE FPC THICKNESS)	0.3mm
触点(CONTACT)	single

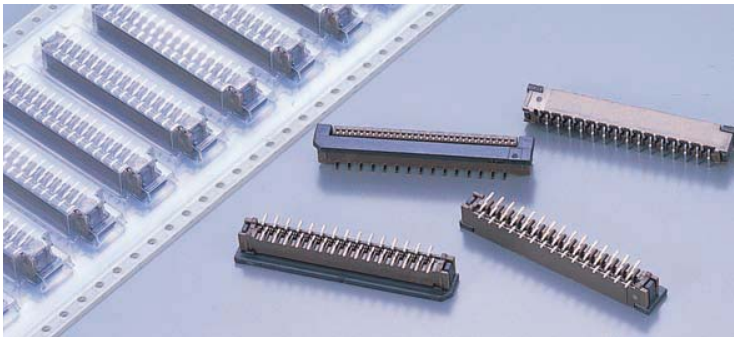

Series 6248

这是基于具有高性能、高可靠性的6208系列的概念而设计的、间距1.0mm、垂直型、ZIF、SMT连接器。

Series 6248 is 1.0mm pitch Vertical, ZIF, SMT type connector designed for cost advantage of series 6208 which is already recognized for its high performance and reliability.

Series 6229

系列名称(SERIES)	6229
极数(NO. OF POSITIONS)	40
高度(PROFILE HEIGHT)	5.7mm
间距(PITCH)	1.0mm
额定电流(CURRENT)	AC/DC 1A CONTACT
额定电压(VOLTAGE)	AC/DC 50V CONTACT
耐压值(D.W. VOLTAGE)	500 Vrms/min
适用FPC厚度(APPLICABLE FPC THICKNESS)	0.3mm
触点(CONTACT)	single

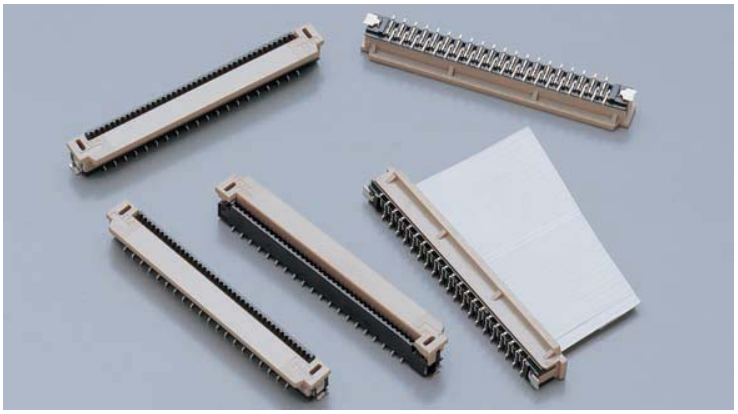

Series 6229

这是基于具有高性能、高可靠性的6208系列的概念而设计的、间距1.0mm、FPC/FFC用ZIF多极连接器。

Series 6229 is 1.0mm pitch ZIF, Vertical, SMT / Thorough Hole connector. Designed for high pin count based on same concept of series 6208 of high quality and reliability.

1.25mm Spacing 1.25mm间距（FPC/FFC 连接器）

Series 6207

系列名称(SERIES)	6207
极数(NO. OF POSITIONS)	5～20
高度(PROFILE HEIGHT)	RA: 3.5mm Vertical: 7.0mm
间距(PITCH)	1.25mm
额定电流(CURRENT)	AC/DC 1A CONTACT
额定电压(VOLTAGE)	AC/DC 125V CONTACT
耐压值(D.W. VOLTAGE)	500 Vrms/min
适用FPC厚度(APPLICABLE FPC THICKNESS)	0.3mm
触点(CONTACT)	dual

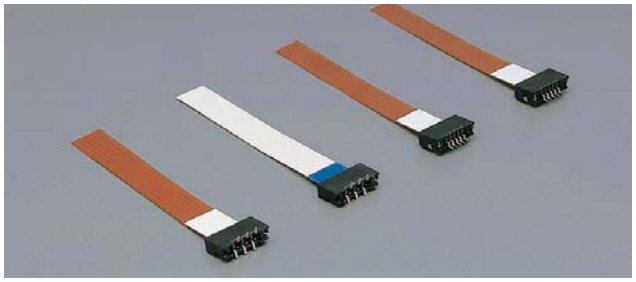

Series 6207

这是SMT、LIF型连接器。因为是双面触点结构，可以获得牢固的接触。备有带定位头的垂直型、带金属件/定位头的直角型。

Series 6207 is 1.25mm pitch, Dual sided contact, SMT, LIF connector, available in both Vertical and Right Angle versions. The Vertical version has a Location Boss, and the Right Angle a Location Boss and metal tab.

Series 8370

系列名称(SERIES)	8370
极数(NO. OF POSITIONS)	4～30
高度(PROFILE HEIGHT)	RA: 4.2mm Vertical: 7.2mm
间距(PITCH)	1.25mm
额定电流(CURRENT)	AC/DC 1A CONTACT
额定电压(VOLTAGE)	AC/DC 125V CONTACT
耐压值(D.W. VOLTAGE)	500 Vrms/min
适用FPC厚度(APPLICABLE FPC THICKNESS)	0.3mm
触点(CONTACT)	dual

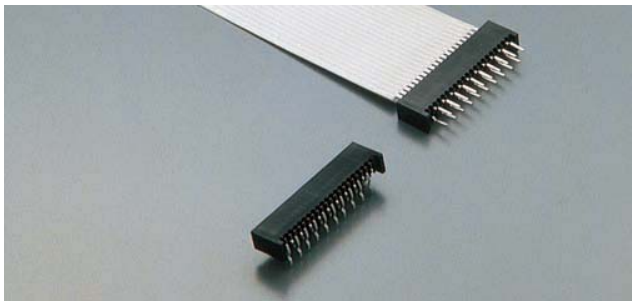

Series 8370

这是LIF型连接器，只需要轻轻按压FPC/FFC，即可很容易插入。

而且因为是双面触点结构，接触很牢固。备有垂直型和直角型两种型号。

A LIF type making best use of FPC/FFC features equipped with a dual-face contact mechanism to provide secure contact.Available in the vertical type and the Right Angle type.

Series 6216

系列名称(SERIES)	6216
极数(NO. OF POSITIONS)	4～40
高度(PROFILE HEIGHT)	RA: 4.2mm Vertical: 7.0mm
间距(PITCH)	1.25mm
额定电流(CURRENT)	AC/DC 1A CONTACT
额定电压(VOLTAGE)	AC/DC 125V CONTACT
耐压值(D.W. VOLTAGE)	500 Vrms/min
适用FPC厚度(APPLICABLE FPC THICKNESS)	0.3mm
触点(CONTACT)	RA: Top.Bottom Vertical: single

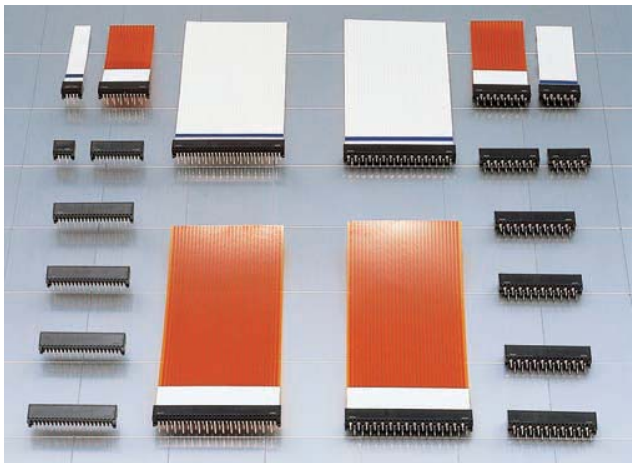

Series 6216

这是间距1.25mm的LIF型连接器，备有垂直型和直角型（上触点、下触点）两种型号。小型而节省空间，备有扭折加工和无扭折加工两种类型。可进行自动装载，收存在料盒中。

Series 6216 is 1.25mm pitch, Through Hole, LIF connector with both Vertical and Right Angle options. The Right Angle style has both Top and Bottom contact versions available. A Kinked Leg option is also offered.

1.25mm Spacing 1.25mm间距（FPC/FFC 连接器）

Series 5062

サポーティングウェハー
Supporting Wafer

系列名称(SERIES)	5062
极数(NO. OF POSITIONS)	5～23
高度(PROFILE HEIGHT)	5.0mm
间距(PITCH)	1.25mm
额定电流(CURRENT)	AC/DC 1A CONTACT
额定电压(VOLTAGE)	AC/DC 125V CONTACT
耐压值(D.W. VOLTAGE)	500 Vrms/min
适用FPC厚度(APPLICABLE FPC THICKNESS)	0.3mm
触点(CONTACT)	*

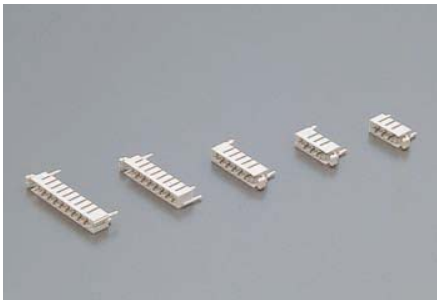

Series 5062

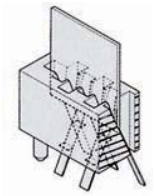

只需要轻轻插入FFC，间距为1.25mm，打开交错型板，在电路板上很容易进行焊接作业。与过去的直接焊接接线方法相比，可以大幅度节省工时。

Series 5062 is 1.25mm pitch, Vertical housing block for Through Hole type FFC Conductor.
FFC bare conductor will spread staggered position by insertion.
It is quite efficient solution for FFC direct soldering.

Series 6203

ボトムエントリー
Bottom Entry

系列名称(SERIES)	6203
极数(NO. OF POSITIONS)	5～15
高度(PROFILE HEIGHT)	5.5mm
间距(PITCH)	1.25mm
额定电流(CURRENT)	AC/DC 1A CONTACT
额定电压(VOLTAGE)	AC/DC 125V CONTACT
耐压值(D.W. VOLTAGE)	500 Vrms/min
适用FPC厚度(APPLICABLE FPC THICKNESS)	0.3mm
触点(CONTACT)	single

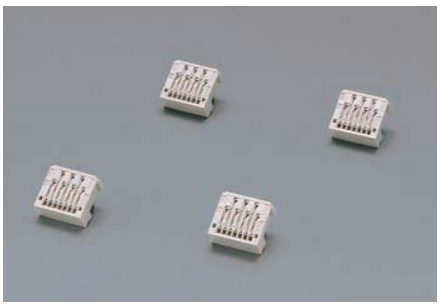

Series 6203

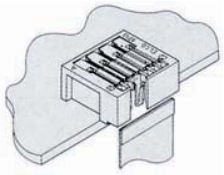

这是可以从电路板的下方插入并嵌合的连接器。不仅可以从电路板的边缘拔出，通过缝隙还可以从任何位置拔出。

Series 6203 is 1.25mm pitch, Right Angle, Through Hole, bottom entry LIF connector. This connector allows FPC / FFC to be inserted upward from bottom when mounted on the edge of the PCB or over a slot in the PCB.

Series 6205

系列名称(SERIES)	6205
极数(NO. OF POSITIONS)	8～40
高度(PROFILE HEIGHT)	8.9mm
间距(PITCH)	1.25mm
额定电流(CURRENT)	AC/DC 1A CONTACT
额定电压(VOLTAGE)	AC/DC 125V CONTACT
耐压值(D.W. VOLTAGE)	500 Vrms/min
适用FPC厚度(APPLICABLE FPC THICKNESS)	0.3mm
触点(CONTACT)	single

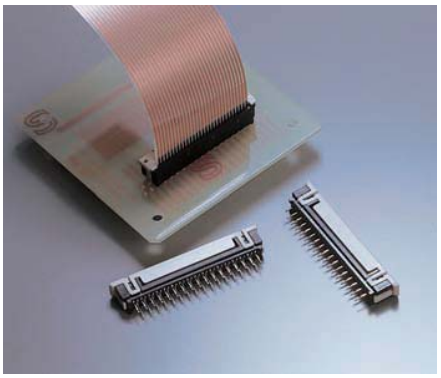

Series 6205

这是间距1.25mm、垂直型ZIF连接器，是可以广泛应用于汽车、工业设备、办公设备的高可靠性DIP型连接器。

Series 6205 is 1.25mm pitch, Through Hole, Vertical ZIF connector for a wide range in industries including Automotive, information equipment and peripherals. This is a high reliable robust connector.

Super Microleaf Connectors 超级MICROLEAF连接器

PRODUCT SELECTOR GUIDE

Series	Pitch	Height	10	12	14	16	18	20	22	24	26	28	30	32	34	36	38	40	42	44	46	48	50	52	54	56	58	60	70	80	90	100	110	120	130	140
5801	0.4	0.8mm			○	○		○		○			○		○			○		○			○		○			○	○								
5805	0.4	1.0mm				○		○		○			○		○			○		○			○		○			○	○								
5605	0.4	1.0mm				○		○		○			○		○			○					○					○	○	○							
5602	0.4	1.5mm				○		○		○	○		○	○	○	○		○		○			○		○			○	○	○							
		1.5mm																					○					○						○		○
		2.0mm																												○							
5604	0.5	2.4mm																										○						○			
5645	0.5	1.5mm						○					○					○					○					○	○	○							
		2.0mm	○					○					○										○					○		○						○
5087	0.5	2.5mm						○					○										○					○								
		3.0mm						○					○					○					○					○	○	○	○	○	○	○		
		3.5mm						○					○					○					○					○	○	○	○	○	○	○		
		4.0mm						○					○					○					○					○	○	○	○	○	○	○		
5046	0.5	4.5mm						○					○					○					○					○	○	○	○	○	○	○		
		5.0mm						○					○					○					○					○	○	○	○	○	○			
5047	0.5	7.0mm						○					○					○										○	○	○	○	○				
5603	0.5	10mm																																		○

有关极数和其他参数和特点，请与本公司营业部联系。

Super Microleaf Connectors 超小型连接器

Series 5801

系列名称(SERIES)	5801
极数(NO. OF POSITIONS)	10～80
嵌合高度(STACKING HEIGHT)	0.8mm
间距(PITCH)	0.4mm
额定电流(CURRENT)	AC/DC 0.3A CONTACT
额定电压(VOLTAGE)	AC/DC 50V CONTACT
耐压值(D.W. VOLTAGE)	250 Vrms/min

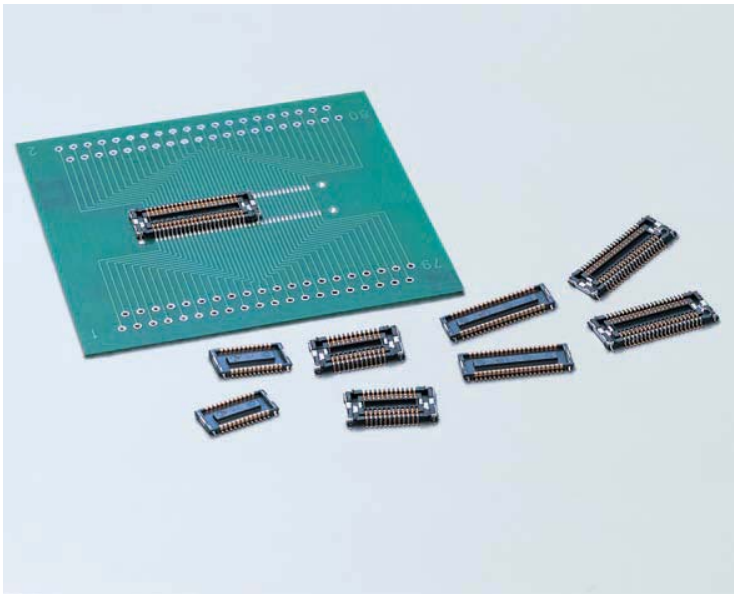

Series 5801

◆概要

根据市场上对手机、PHS、数码式影音设备的小型化、薄型化要求而开发的间距0.4mm、嵌合高度0.8mm的最低高度的板对板连接器。

◆特点

(1) 接点的弹簧结构采用了本公司独创的「S型弹簧」。并实现了全行业最低的嵌合高度H=0.8mm。

(2) 接点部采用了抗振动、抗跌落冲击的「夹子型接点结构」(双接点)。此外，插头侧的接点形状采用了「TWIN-RIB」 结构，能够排除飞溅上的助焊剂以及电路板碎屑等异物的影响，实现了高度的接触可靠性。

(3) 嵌合时的锁定构造采用了「FINE-LOCK」结构。在实现了低高度的同时具有良好的嵌合手感，此外还实现了在拔开时增强保持力的功能。

(4) 金属固定片不仅能够加强锁定强度，还能够导电。因此，可以灵活运用于如「GROUND」、「POWER」等新的功能及用途。

(5) 备有检测用连接器，用于和连接器嵌合，可以简单地测试导电、短路。

(6) 连接器背面没有金属外露，无效空间小。可在端子间的空间进行配线，是最适用于高密度安装的结构。

(7) 采用2000粒/卷的压纹带包装。

◆Outline

Series 5801 is a 0.4mm-pitch board to board connector with 0.8mm of the lowest profile designed to meet the market requirement for downsizing and thinner tendency in cellular phones, PHS, and digital AV apparatus.

◆Features

(1)KEC-unique S-shaped spring is adopted for the spring structure, which realizes the lowest profile of 0.8mm in this field.

(2)"Double-sided contact structure" is adopted to enhance the resistance to vibration or drop shock. The "Twin-rib" structure that is employed for the shape of contact on plug side, which eliminates foreign obstacles such as splash of the flux, chips of boards separation and so on, and ensures the high contact reliability.

(3)"Fine lock mechanism" is adopted for mating lock structure that realizes the firm clicking response and enhances the retention force when connectors unmated even with their low profile.

(4)The metal tab reinforces the locking strength and is utilized for electrical connection such as "Ground", "Power" line or so.

(5)The checker connector is also supplied to realize easy check on conductivity and short-circuit in connectors under mated condition.

(6)Pattern can be laid out between connector leads, which is suitable for high density package, because no metal is exposed on the bottom of connector, which generates the small dead space.

(7)Designed for automatic mounting machine, packaged in tape and reel. (2,000 pieces/reel)

Super Microleaf Connectors 超小型连接器

Series 5805

系列名称(SERIES)	5805
极数(NO. OF POSITIONS)	10～80
嵌合高度(STACKING HEIGHT)	1.0mm
间距(PITCH)	0.4mm
额定电流(CURRENT)	AC/DC 0.3A CONTACT
额定电压(VOLTAGE)	AC/DC 50V CONTACT
耐压值(D.W. VOLTAGE)	250 Vrms/min

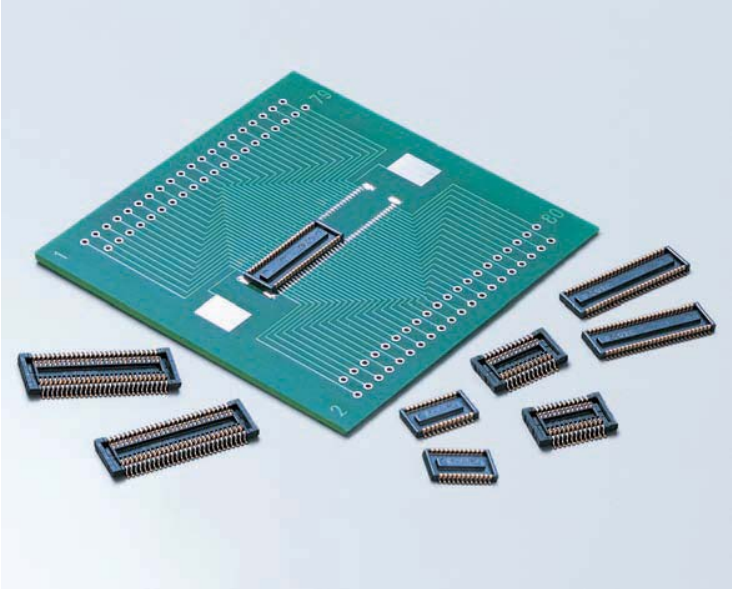

Series 5805

◆概要

根据市场上对手机、PHS、数码式影音设备的小型化、薄型化要求而开发的间距0.4mm、嵌合高度1.0mm的超低高板对板连接器。

◆特点

(1) 接点弹簧结构采用了本公司独创的「S型弹簧」。实现了低高度。

(2) 接点部采用了抗振动、抗跌落冲击的「夹子型接点结构」(双接点)。此外，插头侧的接点形状采用了「TWIN-RIB」 结构，能够排除飞溅上的助焊剂以及电路板碎屑等异物的影响，实现了高度的接触可靠性。

(3) 嵌合时的锁定构造采用了「FINE-LOCK」结构。在实现了低高度的同时具有良好的嵌合手感，此外还实现了在拔开时增强保持力的功能。

(4) 备有检测用连接器，用于和连接器嵌合，可以简单地测试导电、短路。

(5) 备有有定位柱/无定位柱的品种。

(6) 连接器背面没有金属外露，无效空间小。可在端子间的空间进行配线，是最适用于高密度安装的结构。

(7) 采用2000粒/卷的压纹带包装。

◆Outline

Series 5805 is a very low profile 0.4mm-pitch, 1.0mm stacking height board to board connector designed to meet the market requirement for downsizing and thinner tendency in cellular phones, PHS, and digital AV apparatus.

◆Features

(1)KEC-unique S-shaped spring is adopted for the spring structure, which realizes very low profile.

(2)Double-sided contact structure is adopted to enhance the resistance to vibration or drop shock. The Twin-rib structure that is employed for the shape of contact on plug side, which eliminates foreign obstacles such as splash of the flux, chips of boards separation and so on, and ensures the high contact reliability.

(3)Fine lock mechanism is adopted for mating lock structure that realizes the firm clicking response and enhances the retention force when connectors unmated even with their low profile.

(4)The checker connector is also supplied to realize easy check on conductivity and short-circuit in connectors under mated condition.

(5)Connectors with or without the boss are available.

(6)Pattern can be laid out between connector leads, which is suitable for high density package, because no metal is exposed on the bottom of connector, which generates the small dead space.

(7)Designed for automatic mounting machine, packaged in tape and reel. (2,000 pieces/reel)

Super Microleaf Connectors 超小型连接器

Series 5605

系列名称(SERIES)	5605
极数(NO. OF POSITIONS)	16～80
嵌合高度(STACKING HEIGHT)	1.0mm
间距(PITCH)	0.4mm
额定电流(CURRENT)	AC/DC 0.4A CONTACT
额定电压(VOLTAGE)	AC/DC 50V CONTACT
耐压值(D.W. VOLTAGE)	250 Vrms/min

Series 5605

◆概要

这是适应市场上蜂窝电话、PHS、数码AV设备的小型化、薄型化要求而开发的间距0.4mm、嵌合高度1.0mm的板对板连接器。

◆特点

(1) 触点的弹簧结构采用了利用弹簧材料压延面的“柔性弹簧”，具有高度的接触可靠性。
(2) 因插头端有凹孔，使嵌合牢固，同时可防止嵌合脱落。另外，通过与R形插座端触点的接触，提高擦拭作用，保证了接触可靠性。
(3) 采用插头端的嵌件成型和插座端的下壁（箱形）结构，防止了芯吸。同时插头触点在内壁端，能够耐受焊剂的飞溅。
(4) 连接器背面的无效空间小，可在产品端子面的对面空间进行型板布线，是最适于高密度安装的结构。
(5) 备有有金属件/无金属件、有定位头/无定位头的多种品种。

◆Outline

This is a board to board connector with 0.4mm pitch and 1.0mm stacking height, and was developed based on the request for downsizing of cellular phones, PHS, and digital AV apparatus in the market.

◆Features

(1)The bellows spring, for which rolled plane of the spring material is used, is employed to obtain high contact reliability.
(2)With dimples on the plug side, a nice clicking sound is obtained when the connectors are mated, preventing incomplete mating.
(3)Solder wicking is prevented by insert molding the plug and bottom wall (box-shaped) of the receptacle. There are plug contacts on the inside wall, which effectively protects against flux splash.
(4)The dead space behind the connector is small enough, and able to lay a wiring pattern between the pin lands of the connectors.
(5)It is offered with or without metal tabs and positioning boss.

Super Microleaf Connectors 超小型连接器

Series 5602

系列名称(SERIES)	5602
极数(NO. OF POSITIONS)	16～80
嵌合高度(STACKING HEIGHT)	1.5mm
间距(PITCH)	0.4mm
额定电流(CURRENT)	AC/DC 0.5A CONTACT
额定电压(VOLTAGE)	AC/DC 50V CONTACT
耐压值(D.W. VOLTAGE)	250 Vrms/min

Series 5602

◆概要

5602系列是适应市场上手持设备的小型化要求而开发的高度1.5mm、间距0.4mm的板对板连接器。

可以在移动PC、超薄型笔记本电脑、蜂窝电话、PHS、DVD（数码摄像机）、DSC（数码照相机）、MD及其组合设备的市场中具有广泛的销售前景。

◆特点

(1) 这是间距0.4mm、堆叠高度1.5mm的窄间距、低背型连接器。在全行业实现了最小的占用空间。
(2) 可防止嵌合时的脱落的结构设计，虽然间距狭窄，但仍可保证嵌合牢固。
(3) 备有有金属件/无金属件、有定位头/无定位头的多种品种。
(4) 防止芯吸的结构设计。
(5) 连接器背面的无效空间小，可在产品端子面的对面空间进行型板布线，是最适于高密度安装的结构。
(6) 适用于FPC的安装。
(7) 采用环保型无铅焊锡。
(8) 可自动装载，为2000粒／卷盘的压纹带捆扎品。

◆Outline

Series 5602 is 0.4mm pitch board to board connector with stacking height of 1.5mm. It is designed to meet the requirements of miniaturization in the market of portable equipment.
It applies to the cellular phone, mobile PC, slim Notebook-PC, DSC (Digital Still Camera), DVC (Digital Video Camera) and other complex equipments markets.

◆Features

(1)0.4mm fine pitch and low profile connector with a stacking height of 1.5mm, achieving one of the smallest spaces available in the industry.
(2)Structured to prevent the detachment of plug and receptacle after their mating, resulting in the good click feeling as with all small pitch board to board designs.
(3)Offered with and without metal retention tabs and positioning bosses.
(4)Designed to prevent solder wicking.
(5)The small dead space on the back side of connector makes it possible to form the wiring patterns between the opposed product terminal lands, which is advantageous for high density mounting.
(6)Structured to also mount on FPC cables.
(7)Environmentally-friendly lead free type available.
(8) Designed for the automatic mounting machine, packaged in tape and reel. (2,000 pieces/reel)

Super Microleaf Connectors 超小型连接器

Series 5604

系列名称(SERIES)	5604
极数(NO. OF POSITIONS)	50～140
嵌合高度(STACKING HEIGHT)	1.5mm、2.0mm、2.4mm
间距(PITCH)	0.5mm
额定电流(CURRENT)	AC/DC 0.5A CONTACT
额定电压(VOLTAGE)	AC/DC 50V CONTACT
耐压值(D.W. VOLTAGE)	250 Vrms/min

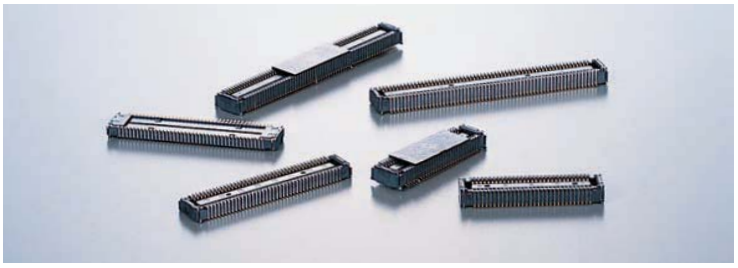

Series 5604

伴随市场上产品小型化、轻量化的需要，安装密度不断提高，本产品就是为满足此要求、特别是面向手持式小型设备而开发的间距0.5mm、SMT型、板对板连接器。

极数为从60极到120极。

备有嵌合高度1.5mm、2.0mm、2.4mm的多种品种，虽为低背性，但嵌合稳定性优异，提高了操作的牢固性，作业非常可靠。

Series 5604 is SMT type, board to board connector with 0.5mm pitch that was designed for compact equipment such as cellular phones that need the high density package accompanying the tendency of downsizing and light-weighting in products in the market.
Multiple contacts from 50 to 140 are available.
While it achieves very low profile, it assures stable mated condition and improves the clicking feeling, which can ensure the proper mating action work.

Series 5645

系列名称(SERIES)	5645
极数(NO. OF POSITIONS)	20～80
嵌合高度(STACKING HEIGHT)	1.5mm
间距(PITCH)	0.5mm
额定电流(CURRENT)	AC/DC 0.4A CONTACT
额定电压(VOLTAGE)	AC/DC 50V CONTACT
耐压值(D.W. VOLTAGE)	250 Vrms/min

Series 5645

5645系列是适应市场上高密度安装的要求、特别是薄型笔记本电脑等低背化的要求而开发的间距0.5mm、高度1.5mm的板对板连接器。

Series 5645 is 0.5mm pitch, 1.5mm stack height, low profile, board to board connector. It is designed for high density mounting, especially in slim Notebook-PC where the need for low profile solutions is critical.

Series 5087
Series 5046
Series 5047

系列名称(SERIES)	5087／5046／5047
极数(NO. OF POSITIONS)	5087 10～140 5046 20～120 5047 20～100
嵌合高度(STACKING HEIGHT)	5087=2.2.5mm 5046=3.3.5.4.4.5mm 5047=5.7mm
间距(PITCH)	0.5mm
额定电流(CURRENT)	AC/DC 0.4A CONTACT
额定电压(VOLTAGE)	AC/DC 50V CONTACT
耐压值(D.W. VOLTAGE)	500 Vrms/min

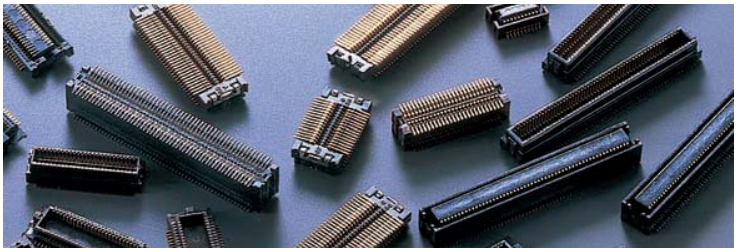

Series 5087/5046/5047

京瓷爱克超级MICROLEAF连接器系列，是为了满足市场上高密度安装的要求、特别是针对手持式小型设备而开发的板对板、窄间距、低背型连接器。嵌合时电路板间的间隔为2.0mm～7.0mm，采用了京瓷爱克独特的接插系统，超小型且嵌合牢固，提供高可靠性。结构保证可以自动装载，为1000粒／卷盘的压纹带捆扎品。同时，也可以选购带吸附带的型号。

本连接器适用于实现移动电话、PHS、摄录机等各种手持式电子设备的小型化。

Series 5046/5047/5087 are the Super Microleaf connector series, board to board, fine pitch and low-profile connector system that meets the need for high-density circuits in the market, and it is designed especially for the portable equipment. The stack height between boards can range from 2.0mm to 7.0mm. ELCO's original design concept of receptacle contact achieves fine click feeling at mating and extremely high reliability in the connection of these super micro sized connectors.
Designed for automatic mounting machine, packaged in tape and reel.(1,000 pieces/reel)

Super Microleaf Connectors 超小型连接器

Series 5603

系列名称(SERIES)	5603
极数(NO. OF POSITIONS)	140
嵌合高度(STACKING HEIGHT)	10mm
间距(PITCH)	0.5mm
额定电流(CURRENT)	AC/DC 0.4A CONTACT
额定电压(VOLTAGE)	AC/DC 50V CONTACT
耐压值(D.W. VOLTAGE)	150 Vrms/min

Series 5603

◆概要

5603系列是由T-Engine论坛所标准化的扩展总线用连接器。为间距0.5mm、140极、垂直型、SMT型板对板连接器。最适用于PDA等手持式终端设备。

◆特点

(1) 通过与外壳一体成型的可有数百种组合的嵌合键，可防止误嵌合。嵌合键的分配由T-Engine论坛设定。

(2) 触点的弹簧结构采用了“柔性弹簧”，增大了可动范围，可确保稳定的接触力，具有高可靠性结构。

◆Outline

Series 5603 is developed for expansion bus standardized in the T-Engine forum. It is 0.5mm pitch, Vertical, SMT type, board to board connector that contains 140 contacts. It is suited for ubiquitous equipment such as PDA.

◆Features

(1)Mating keys that have hundreds of combinations are integrally molded with the housing to prevent improper mating. The key code will be assigned by T-Engine forum.

(2)The bellows spring is equipped for the spring structure of the contacts, which obtains larger movable space, secures stable contact reliability, and possesses high reliability.

Microleaf Connectors 0.5mm MICROLEAF式连接器 0.5mm

Series 5607

系列名称(SERIES)	5607
极数(NO. OF POSITIONS)	30
嵌合高度(STACKING HEIGHT)	10mm
间距(PITCH)	0.5mm
额定电流(CURRENT)	AC/DC 0.4A CONTACT
额定电压(VOLTAGE)	AC/DC 50V CONTACT
耐压值(D.W. VOLTAGE)	150 Vrms/min

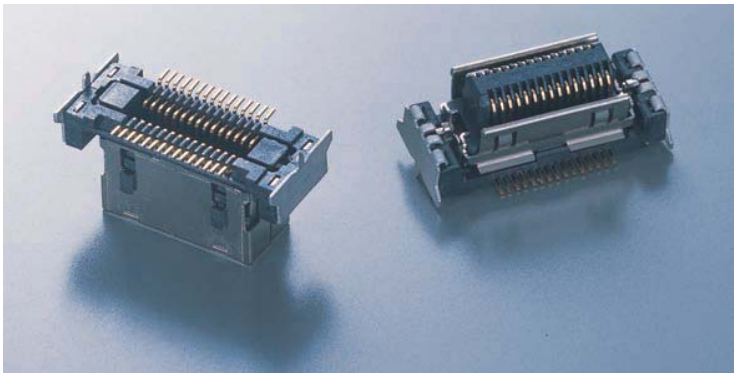

Series 5607

◆概要

这是间距0.5mm、高度10mm、30极的板对板浮动式连接器。适用于笔记本电脑的模块电路板（搭载USB、存储卡等）的连接。

◆特点

(1) 阴阳连接器的金属壳体分别通过金属固定件与各电路板接地区牢固接地，连接器的电磁兼容屏蔽极其可靠。同时，与金属固定件结构为一体的定位头通过浸焊、回流焊予以固定，抵销了扭曲、冲击等负荷对引线部的影响，保证了超群的固定强度和连接可靠性。

(2) 利用浮动结构，在嵌合连接器的状态下，可以使电路板在安装面的X、Y方向移动±0.2 mm，在嵌合方向移动0～1.00mm。

(3) “柔性弹簧”，利用这种“柔性弹簧”，增大了可动范围，并可确保稳定的接触力，获得高接触可靠性。

(4) 备有吸附夹，不需要特殊吸嘴即可进行稳定的自动装载。

◆Outline

The 5607 series is floating type board to board connector with 0.5mm pitch and a 1.0mm stacking height. It is designed for connections between module PCBs (on which USBs, memory cards, and so on are mounted) in Notebook-PC.

◆Features

(1)Shielding measurement against EMC shows that the metal shells of both the plug and receptacle are definitely connected to the ground pattern via each metal tab.
The mounting boss integrated with the metal tab is fixed by means of dip reflow, which shuts out any influence of twisting and/or impact on leads. Thus excellent fixing strength and connection reliability are assured.

(2)The floating structure enables the boards to move ±0.2mm in the X and Y direction along the component side of the board, 0 to 1.00mm in the mating direction while connectors are mated.

(3)The bellows spring, for which the rolled plane of the spring material is used, is utilized for the spring structure of the contacts to obtain high contact reliability by achieving stable contact-reliability with a wider movable range.

(4)The pick and place clip enables assured automatic mounting without the need for a special nozzle.

Series 5042

0.5mmPitch BtoB Floating Type

系列名称(SERIES)	5042
极数(NO. OF POSITIONS)	120
嵌合高度(STACKING HEIGHT)	16.0mm
间距(PITCH)	0.5mm
额定电流(CURRENT)	AC/DC 0.5A CONTACT
额定电压(VOLTAGE)	AC/DC 50V CONTACT
耐压值(D.W. VOLTAGE)	500 Vrms/min

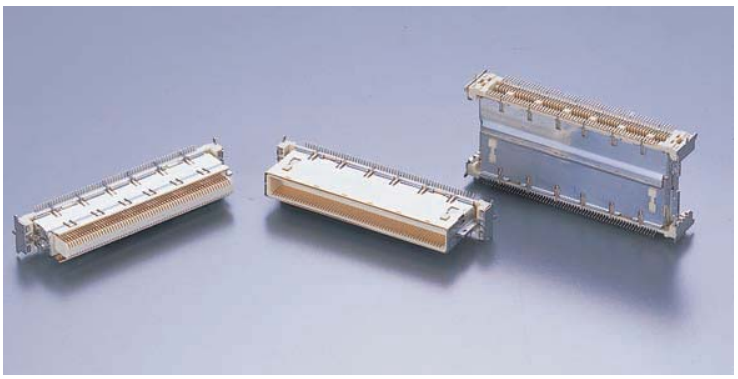

Series 5042

这是适应市场上高密度安装的要求、特别是针对薄型笔记本电脑、手持式小型设备而开发的间距0.5mm、板对板、浮动式连接器。虽然是0.5mm的窄间距，但在连接器上设置了±0.3mm的浮动机构，可以吸收安装位置的偏移。

Series 5042 is floating type board to board connector with 0.5mm pitch. It is designed for small sized applications such as slim Notebook-PC, Hand held PC, etc. Floating structure is able to accommodate ±0.3mm offset of mating position even it is 0.5mm of fine pitch.

Microleaf Connectors 0.8mm MICROLEAF连接器0.8mm

Series 5609

系列名称(SERIES)	5609
极数(NO. OF POSITIONS)	30
嵌合高度(STACKING HEIGHT)	3.0,4.2,5.0,7.0mm
间距(PITCH)	0.8mm
额定电流(CURRENT)	AC/DC 0.5A CONTACT
额定电压(VOLTAGE)	AC/DC 50V CONTACT
耐压值(D.W. VOLTAGE)	100 Vrms/min

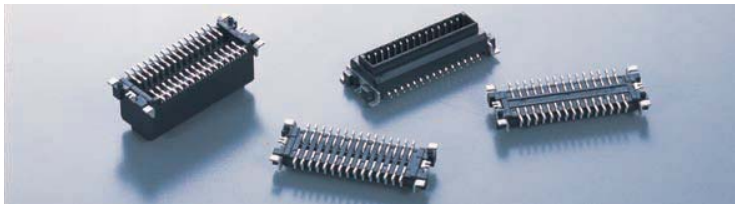

Series 5609

◆概要

这是间距0.8mm、高度3.0mm、4.2mm、5.0mm、7.0mm的板对板连接器，是针对笔记本电脑MDC（移动式子卡）的连接而开发的。

◆特点

(1) 采用阴接触件在绝缘体内被引导的结构，提高了嵌合时的贴合性，可以防止安装位置的偏移，同时改善了作业性能。

(2) 触点的弹簧结构采用了音叉状弹簧，由此而增大了可动范围，保证了稳定的接触力，可获得高接触可靠性。

(3) 通过独特的接触件尾部形状，可防止在产生振动或坠落冲击时发生的焊点断裂。

◆Outline

Series 5609 is board to board connector with 0.8mm pitch, H=3.0mm, 4.2mm, 5.0mm, 7.0mm, and was designed for connection of MDC (Module Daughter Cards) used in Notebook-PC.

◆Features

(1)Plug contact is guided into the groove of receptacle contact, which improve mating function, also prevents displacement in the mounting process.

(2)Tuning-folk-shaped spring is equipped for the spring structure of the contacts to obtain high contact reliability by achieving stable contact-ability with the wider movable range.

(3)Solder cracks caused by vibration and/or dropping impact, is prevented by its original tail shape of contacts.

Series 5608

系列名称(SERIES)	5608
极数(NO. OF POSITIONS)	50,80
嵌合高度(STACKING HEIGHT)	5.0mm(50極),9.0mm(80極)
间距(PITCH)	0.8mm
额定电流(CURRENT)	AC/DC 0.5A CONTACT
额定电压(VOLTAGE)	AC/DC 50V CONTACT
耐压值(D.W. VOLTAGE)	500 Vrms/min

Series 5608

◆概要

这是间距0.8mm、高度5.0mm（50极）、9.0mm（80极）的板对板浮动式连接器，最适于汽车导航等车载设备。

◆特点

(1) 通过插头端的浮动结构（双片），在连接器嵌合的状态下，在电路板安装面的X、Y方向可移动±0.4mm，在嵌合方向可移动0～1.0mm，可以容许安装等时产生的误差。

(2) 通过设置“插入导向键”，提高了嵌合时的贴合性，安装位置有偏移时也比较容易插入，改善了作业性能。

(3) 采用了“柔性弹簧”，增大了可动范围，确保稳定的接触力，实现了平滑而强固的接触状态。

◆Outline

Series 5608 is floating type board to board connector with 0.8mm pitches, the height of 5.0mm for 50pins and 9.0mm for 80 pins, designed for use in car navigation systems.
Although there are two types of number of pins, 50 pins and 80 pins so far, any pin number connectors are available as required.

◆Features

(1)With the introduction of floating structure to plug side, mated connector can be moved ±0.4mm in X, Y directions, 0 to 1.0mm in mating direction, which allows the tolerance in mounting.

(2)"Mating guide key" improves the guiding performance when mated, which also contributes to the enhancement of work ability even in the case of misalignment of connectors on the board.

(3)"Bellows spring" realizes the wide movable range, stable contact-ability, and pliable and strong contact condition.

Series 5600

系列名称(SERIES)	5600
极数(NO. OF POSITIONS)	30～50
间距(PITCH)	0.8mm
额定电流(CURRENT)	AC/DC 0.5A CONTACT
额定电压(VOLTAGE) AC/DC	AC 200V CONTACT DC 300V CONTACT
耐压值(D.W. VOLTAGE)	500 Vrms/min

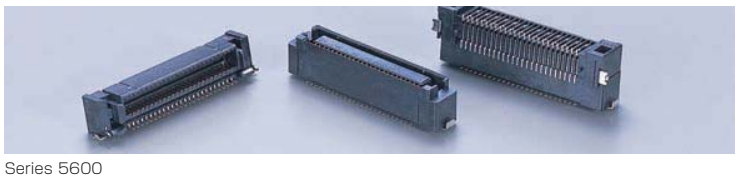

Series 5600

这是适应市场上高密度安装的要求、特别是用于CD-ROM的I/O而开发的间距0.8mm、双片型板对板连接器。

插头端为直角型，插座端为垂直型。电路板间垂直连接。

Series 5600 is two-piece board to board connector with 0.8mm pitch, SMT, designed for high-density applications like CD-ROM I/O. It connects the PCB vertically with Right Angle (horizontal) plug and vertical receptacle.

Microleaf Connectors 1.0mm MICROLEAF连接器1.0mm

Series 5078

系列名称(SERIES)		5078
极数(NO. OF POSITIONS)		30,40,50,60,80,100,120
嵌合高度(STACKING HEIGHT)		5.0mm
间距(PITCH)		1.0mm
额定电流 (CURRENT)	Vertical 30～120P AC/DC 0.5A	CONTACT
	RA 30～60P AC/DC 0.5A	CONTACT
	RA 80～120P AC/DC 0.3A	CONTACT
额定电压(VOLTAGE)	AC/DC 100V	CONTACT
耐压值(D.W. VOLTAGE)	500	Vrms/min

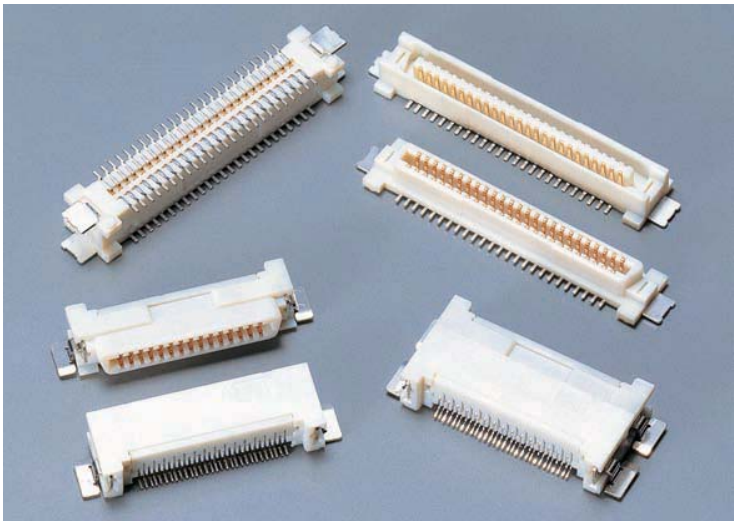

Series 5078

这是瞄准电子设备的进一步紧凑化和高密度化而开发的间距1.0mm、SMT型双片板对板连接器。插头和插座均有直角型和垂直型，嵌合时的电路板间高度5mm，为低背型。触点具有独特的簧片结构，确保了高可靠性。带有金属保持件，免受机械应力损害。可以自动装载，包装存放，在节省人力、降低成本方面具有突出优越性。

Series 5078 is 1.0mm pitch, two-piece board to board, SMT type connector. Variations of Right Angle and Vertical are provided. Board to board stacking height is designed to achieve as low profile as 5.0mm. And, it is protected against the physical stress by the metal tab, tape and reel package in available for automatic mounting machine for 30 positions to 60 positions and hard tray for 80 positions to 120 positions, Also, they are available with vacuum pick up clip

Series 5077

系列名称(SERIES)		5077
极数(NO. OF POSITIONS)		30～80
嵌合高度(STACKING HEIGHT)		8,9,10,11,12mm 13.5,14.5,15.5,19mm
间距(PITCH)		1.0mm
额定电流(CURRENT)	AC/DC 0.5A	CONTACT
额定电压(VOLTAGE)	AC/DC 100V	CONTACT
耐压值(D.W. VOLTAGE)	500	Vrms/min

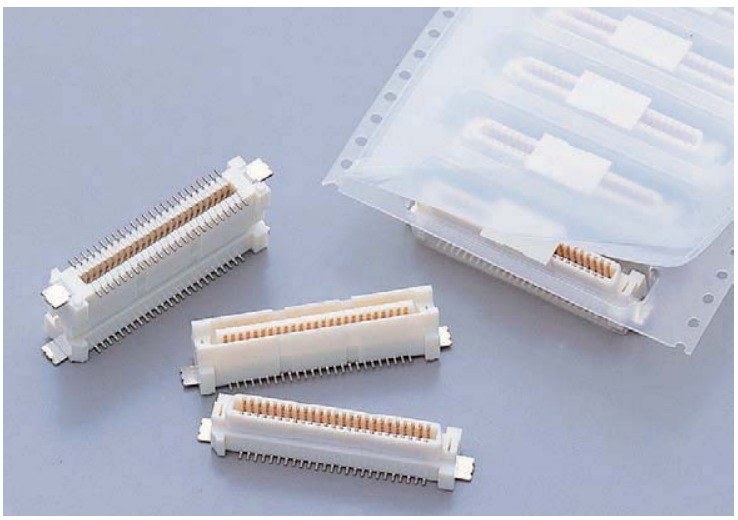

Series 5077

采用与5078系列同样的概念设计，堆叠高度扩大到了8mm～19mm。

Series 5077 is designed to have 8.0mm-19.0mm of extended stacking height based on the same design concept with 5078 series.

Microleaf Connectors 1.27mm MICROLEAF连接器1.27mm

Series 5061
Series 5072

插座
卧式
Receptacle
Right Angle

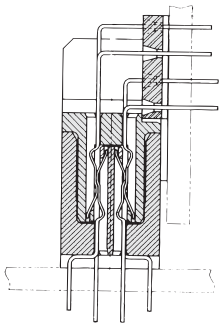

插头
立式
Plug
Vertical

插头
卧式
Plug
Right Angle

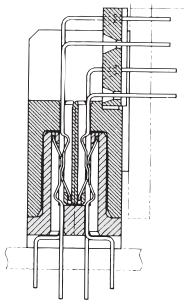

插座
立式
Receptacle
Vertical

插头
卧式
Plug
Right Angle

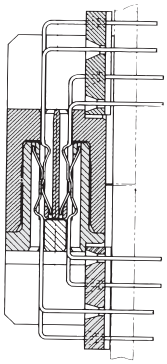

插座
卧式
Receptacle
Right Angle

5061系列
插座
立式
Series 5061
Receptacle
Vertical

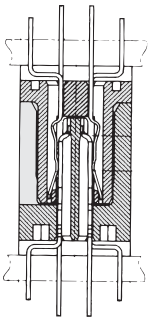

5072系列
插头
立式
Series 5072
Plug
Vertical

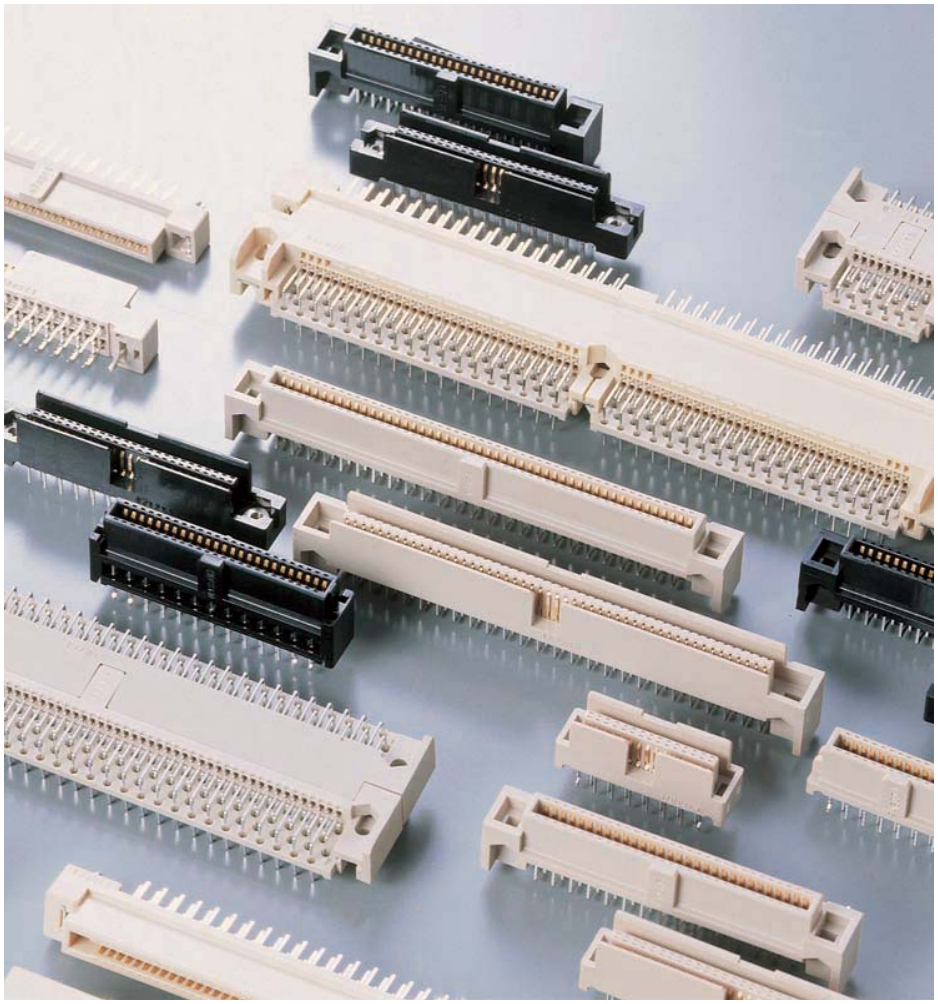

Series 5061、5072

这是瞄准电子设备的进一步紧凑化和高密度化而开发的间距1.27mm的小型双片MICROLEAF连接器。阴阳同型，单面两点接触的簧片结构，嵌合牢固。5072系列是作为与5061系列插座连接器嵌合的低插拔型而开发的。与原有的5061系列插头嵌合时，插入力约减少了10%，具有高达200的极数，具有较长的接触长度，可实现连续接触。

The Microleaf connector is 1.27mm spacing two-piece board to board connector.
The leaf style design provides two points of contact with a positive snap-action and an audible click when fully engaged. The plugs of the 5072 series are compatible with a receptacle of the 5061 series. Owing to the development of new contacts, the insertion force required for mating has been decreased by approximately by 10% in comparison with the conventional 5061 plugs, and as many as 200 contacts have been achieved. This makes a long mating length and sequential contacts possible.

系列名称(SERIES)	5061／5072
极数(NO. OF POSITIONS)	20～200
间距(PITCH)	1.27mm
额定电流(CURRENT)	AC/DC 0.5A CONTACT
额定电压(VOLTAGE)	AC/DC 250V CONTACT
耐压值(D.W. VOLTAGE)	650 Vrms/min

Mezzanine Card Connectors 夹层卡连接器

Series 5015

系列名称(SERIES)	5015
极数(NO. OF POSITIONS)	64
嵌合高度(STACKING HEIGHT)	8.0mm~15.0mm
间距(PITCH)	1.0mm
额定电流(CURRENT)	AC/DC 1A (5Contacts)
额定电压(VOLTAGE)	AC/DC 250V CONTACT
耐压值(D.W. VOLTAGE)	250 Vrms/min

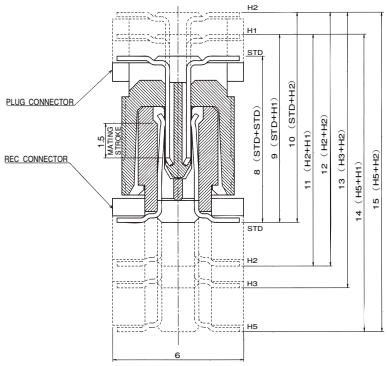

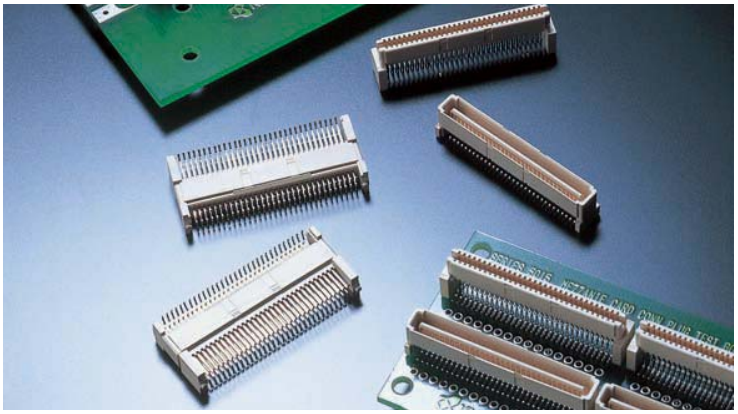

Series 5015

5015系列是支持工业控制计算机、工业设备所搭载的VME总线、主机电路板应用软件的标准IEEE P-1386普通夹层卡标准的板对板连接器。间距1.0mm、64极、SMT型。通过插头和插座的组合，堆叠高度可达8.0mm～16.0mm。由于IEEE P-1368标准的发展，为VME总线系统附加功能性的模块板（＝夹层卡）目前已非常普及。基于PCI标准的芯片、构成要素、软件的环境已经广泛推广到PC的市场。

Series 5015 is board to board connector system which support the IEEE P1386 standard for magazine card installation in industrial computer applications including VME bus, Future bus, Compact-PCI bus and other host systems. This is 1.0mm pitch, 64position, SMT connector capable mezzanine card as 8 to 15mm stacking height.
The IEEE P1386 standard was developed to facilitate the use of modular boards (called mezzanine cards)to add functionality to VME bus systems, typically used in real time systems and industrial computers. PCI was selected as the new auxiliary bus structure because of its higher bandwidth, speed, and flexibility for handling I/O functions. In addition, the chips, components, and software for implementing the PCI standard were already in wide use by the personal computer marketplace.

Post and Box Connectors 插针和插孔连接器

Series 9072

系列名称(SERIES)	9072
极数(NO. OF POSITIONS)	20、30、40、50、60
间距(PITCH)	2.54mm
额定电流(CURRENT)	AC/DC 3A CONTACT
额定电压(VOLTAGE)	AC/DC 300V CONTACT
耐压值(D.W. VOLTAGE)	650 Vrms/min

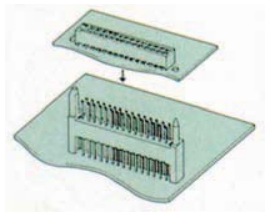

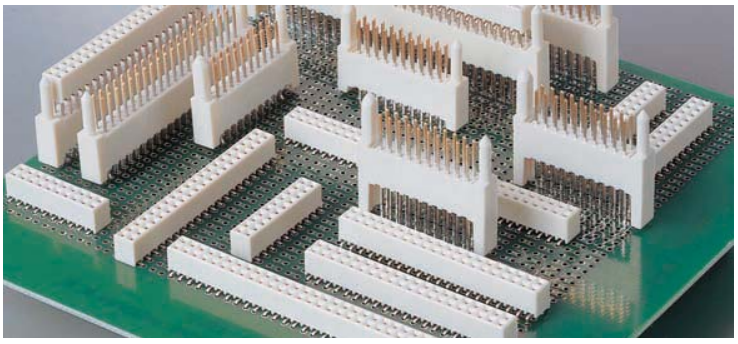

Series 9072

这是作为电路板相互的堆叠而开发的连接器，由插头和插座构成。电路板间的长度可从12/15/18/20mm进行选择。插座为底部接入结构。对插头进行了扭折加工，同时还带有防止误嵌合的定位机构。

Developed for use in stacking the boards, consisting of a header and a receptacle. The height between adjacent boards can be set at 12,15,18 or 20 mm. The receptacle is of bottom entry construction, and the header is kinked. Equipped with guides to prevent incorrect fitting.

Tin Plated Board to Board Connectors 镀锡板对板连接器

Series 5082

系列名称(SERIES)	5082
极数(NO. OF POSITIONS)	5～21
间距(PITCH)	1.25mm
额定电流(CURRENT)	AC/DC 1A CONTACT
额定电压(VOLTAGE)	AC/DC 125V CONTACT
耐压值(D.W. VOLTAGE)	500 Vrms/min

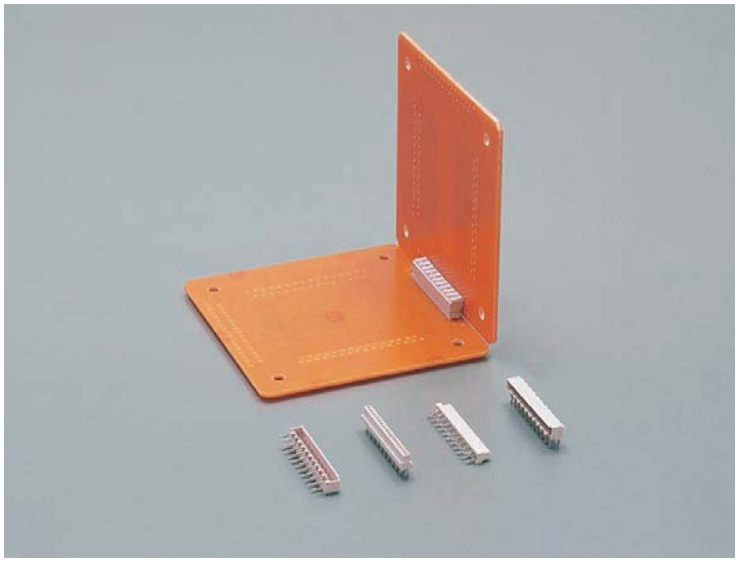

Series 5082

这是电路板和电路板以直角连接时使用的双片型板对板连接器。结构设计追求插入和拔出的作业性能，具有双片型连接器特有的性能稳定性。

A two-piece type to connect boards at Right Angle. Featuring design to maximize efficiency of insertion and separation, with high reliability as the two-piece type.

Series 8283BtoB

系列名称(SERIES)	8283 BtoB
极数(NO. OF POSITIONS)	2～16
间距(PITCH)	2.0mm
额定电流(CURRENT)	AC/DC 1A CONTACT
额定电压(VOLTAGE)	AC/DC 125V CONTACT
耐压值(D.W. VOLTAGE)	500 Vrms/min

插座
直角型
Receptacle Right Angle

并列式
Parallel

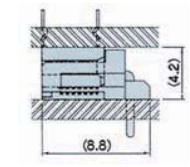

插头 直角型
Plug Right Angle

插座
直角型
Receptacle Right Angle

立式
Vertical

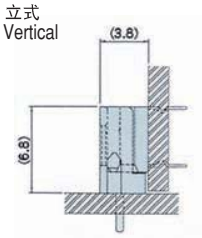

插头 垂直型
Plug Straight

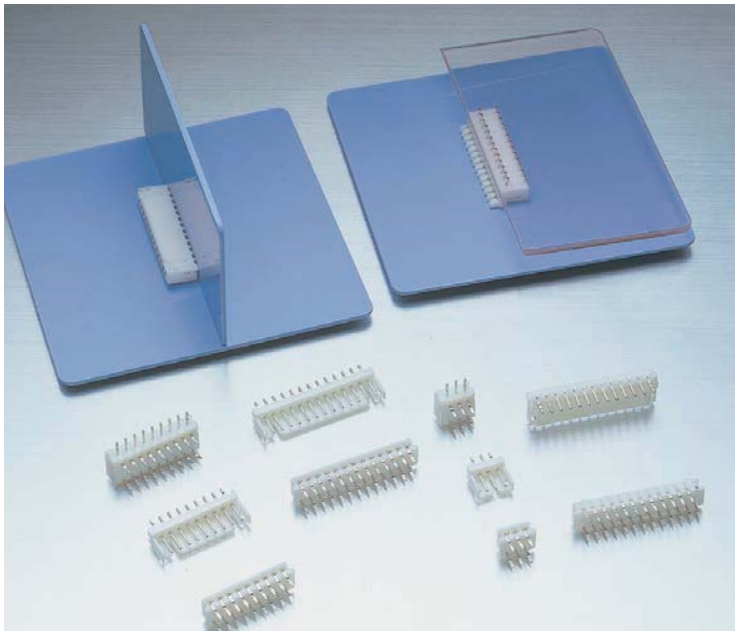

Series 8283 B to B

这是原有8283系列压接型和绝缘刺破压接型的追加系列，系板对板连接器。通过与8283系列的插头组合，可以实现板对板连接。

This new 8283 Series of board-type receptacle connectors includes a crimp and IDC type in addition to the conventional 8283 series. An existing plug of 8283 series as board-to-board connector.

Switching Connectors 电路切换用连接器

Series 8261

标准型切换连接器
EL BIT

系列名称(SERIES)	8261 DIP Throug Hole
极数(NO. OF POSITIONS)	1～10(1列1row) 2～20(2列2row) 3～24(3列3row)
间距(PITCH)	2.54×2.54mm
额定电流(CURRENT)	AC/DC 3A CONTACT
额定电压(VOLTAGE)	AC/DC 200V CONTACT
耐压值(D.W. VOLTAGE)	750 Vrms／min

系列名称(SERIES)	8261 SMT
极数(NO. OF POSITIONS)	2～20(2列2row)
间距(PITCH)	2.54×2.54mm
额定电流(CURRENT)	AC/DC 3A CONTACT
额定电压(VOLTAGE)	AC/DC 200V CONTACT
耐压值(D.W. VOLTAGE)	750 Vrms／min

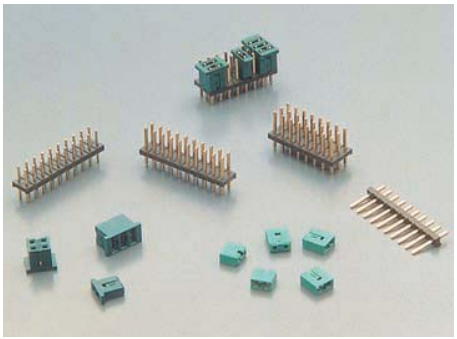

Series 8261

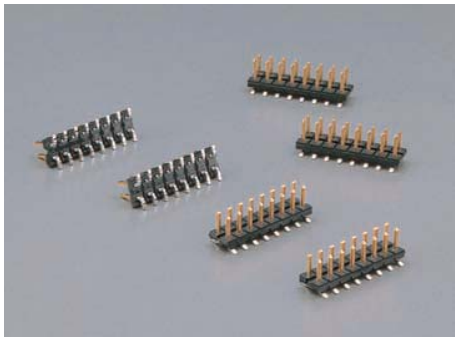

Series 8261 SMT

由插头和插座构成的切换连接器。很容易利用它们的嵌合和分离形成和变更电路。插头有方柱、圆柱、1列、2列、3列，插座有单插座、双插座和三插座等，品种齐全。插头备有垂直型（DIP/SMT）和直角型（DIP）。

The EL-BIT connector consisting of a header and receptacle can be mated or unmated to establish or modify circuits very easily. Various types are provided, rectangular post, round post, single row, dual row, and triple row types for header and single, double, triple types of receptacle. The header is provided for Vertical (Through Hole/SMT) and Right Angle (Through Hole) type.

Series 9067

小型切换连接器
MINI BIT

系列名称(SERIES)	9067
极数(NO. OF POSITIONS)	1～10(1列1row) 2～20(2列2row) 3～30(3列3row)
间距(PITCH)	2.54×2.54mm
额定电流(CURRENT)	AC/DC 3A CONTACT
额定电压(VOLTAGE)	AC/DC 250V CONTACT
耐压值(D.W. VOLTAGE)	650 Vrms／min

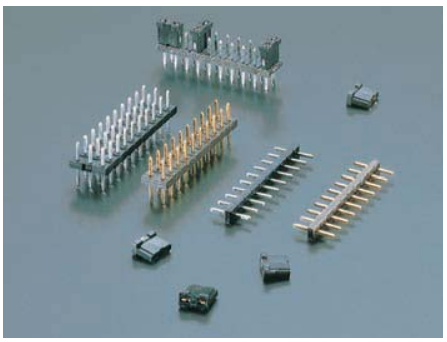

Series 9067

高度仅为5.9mm。插针的电路板端和插座端均为同一尺寸，不分上下方向，大大提高了安装作业性能。插头有1、2、3列，插针为0.5mm方形，适应0.8mm的通孔。

Series 9067 is only 5.9mm height and its header post has the same length on both board and receptacle sides without directivity upwards or downwards. This greatly improves workability in mounting. The header is provided for single, dual, and triple row and the post is 0.5mm square corresponding to through holes 0.8mm in diameter.

Series 8387

微型切换连接器
MICRO BIT

系列名称(SERIES)	8387
极数(NO. OF POSITIONS)	2～16
间距(PITCH)	2.0mm
额定电流(CURRENT)	AC/DC 1A CONTACT
额定电压(VOLTAGE)	AC/DC 125V CONTACT
耐压值(D.W. VOLTAGE)	650 Vrms／min

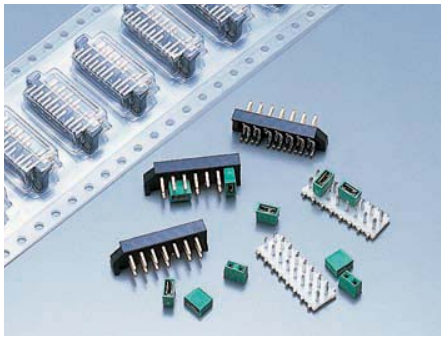

Series 8387

间距2.0mm的SMT，嵌合时电路板上的高度为4.6mm，为超低背型。插头由0.5mm方柱型插针，镀焊锡加工，备有垂直型和直角型品种。

Series 8387 is 2.0mm pitch SMT connector designed to enable the circuit change with the height of 4.6mm on the substrate achieving a very low profile. Header is solder plated with 0.5mm square post. Variations of Vertical and Right Angle are available.

DIN Connectors DIN连接器

Series 8272
Series 8331
Series 8332
Series 8345

系列名称(SERIES)	8272/8331/8332/8345
极数(NO. OF POSITIONS)	20～100(2列,2row) 32～96(3列,3row) 128(4列,4row)
间距(PITCH)	2.54×2.54mm
额定电流(CURRENT)	AC/DC 3A CONTACT(IEC/DIN Standards) AC/DC 1.5A CONTACT(UL Standards)
额定电压(VOLTAGE)	AC/DC 250V CONTACT
耐压值(D.W. VOLTAGE)	1000 Vrms/min
適用基板厚 (Applicable PCB thickness)	1.6mm Max or 2.4mm Max
UL FILE No.	E67646

DIN连接器符合德国工业标准DIN41612。这种连接器具有金属对金属接触的可靠性和效率，它不仅在德国，在以欧洲为首的全世界也是广泛采用。双片型、2/3列，具有高密度和低嵌合力等特性，消除了安装电路板时的故障，结构上可以实现完全的嵌合和正确的接触。京瓷爱克的连接器包括DIN－B、C、Q、R和自主开发的扩展DIN－N型，以及压接、绝缘刺破压接、同轴和高电流用的类型，品种齐全堪称行业第一。

ELCO's DIN connectors conform to German industrial Standard DIN 41612, and with high reliability and efficiency in contact, they are increasingly accepted by users in Europe and other markets in addition to Germany. Featuring high-density, small force required for mating 2piece type, availability as 2 and 3-row types, with construction to ensure tight fit and perfect contact through smooth mounting on printed circuit boards. The DIN connectors are available in a variety of types which are DIN-B,C,Q and R expanded DIN-N (developed by ELCO), crimp type, IDC type, and coaxial cable/high current carrying type, offering largest choice for users.

京瓷爱克的DIN连接器由DIN－B、C、Q、R和扩展DIN－N型构成，8272系列为插头，8345系列为插座。两个系列均备有2列/3列/4列、垂直型/直角型，极数：2列为20～100极，3列为32～96极，4列为128极，品种齐全。接触方式有焊接/绕接型和压配型。尾部长度备有各种尺寸，以适应各种电路板厚度。8331、8332系列是作为8345系列的低嵌合型而开发的，与8345系列同样，可与8272系列插头嵌合。

Available in DIN-B, C, Q, R, and expanded DIN-N types, The 8272 consists of plugs and receptacles, and the 8345 receptacles only.
Both offered in 2/3-row type as well as Vertical and Right Angle types, with the number of positions ranging from 20 to 100 for the 2-row type, and 32 to 96 for the 3-row type.
Contacts are of solder/wire wrap type and press fit type, with a variety of tail lengths to accommodate a wide range of board thickness.
The receptacle of 8331 and 8332 are compatible with a plug 8272.

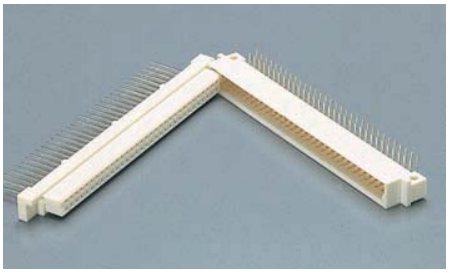

DIN-B型，插头/插座（2列）
DIN-B type plug / receptacle (2row)

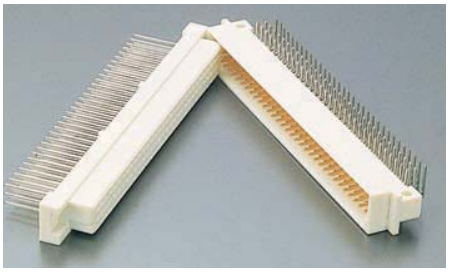

DIN-C型，插头/插座（3列）
DIN-C type plug / receptacle (3row)

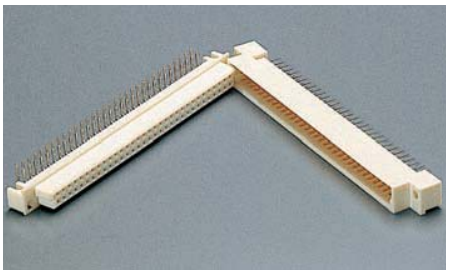

DIN-Q型，插头/插座（2列）
DIN-Q type plug / receptacle (2row)

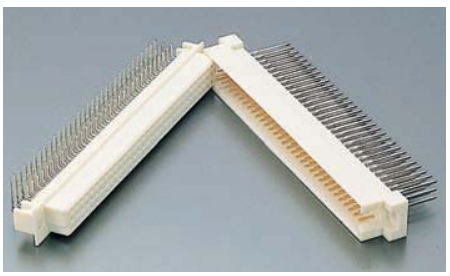

DIN-R型，插头/插座（3列）
DIN-R type plug / receptacle (3row)

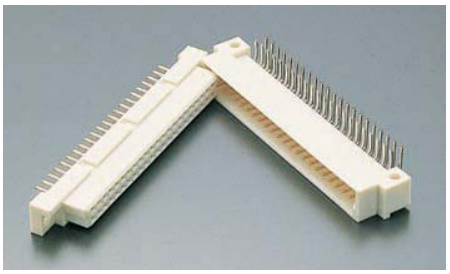

扩展DIN-N型，插头/插座
Expanded DIN-N type plug / receptacle.

DIN Connectors DIN连接器

Series 8455

系列名称(SERIES)	8455
極数(NO. OF POSITIONS)	20.64(2row) 48.96(3row)
间距(PITCH)	2.54×2.54mm
额定电流(CURRENT)	AC/DC 3A CONTACT(IEC/DIN Standards) AC/DC 1.5A CONTACT(UL Standards)
额定电压(VOLTAGE)	AC/DC 250V CONTACT
耐压值(D.W. VOLTAGE)	1,000 Vrms/min
适用电线范围 (Applicable wire sizes)	AWG #22～28
电线套管直径 (Insulation Diameter)	φ1.5mm Max

Series 8455

这是压接型的插座，可与带弹出器的插头等其他DIN系列插头嵌合，备有2列和3列的类型。

Series 8455 is the crimp type receptacle connector being connectable with DIN series plugs, including the ejector-equipped plugs. Available in 2 and 3-row types.

Hard Metric Connectors 硬性公制连接器

Series 8071

Standard
A,B,C,CR,ABtype

系列名称(SERIES)	8071
极数(NO. OF POSITIONS)	35～175
间距(PITCH)	2.0mm Grid
额定电流(CURRENT)	AC/DC 1.0A CONTACT
额定电压(VOLTAGE)	AC/DC 250V CONTACT
耐压值(D.W. VOLTAGE)	750 Vrms/min

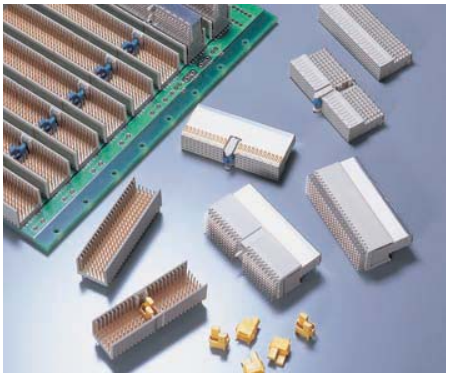

Series 8071

Series 8071 ABtype

8071系列是京瓷爱克为适应计算机、大型网络服务器、通信设备信号的高速化和防止电磁波噪音的要求而开发的符合IEC 1076-4-101标准的间距2.0mm、板对板、硬性公制连接器。备有A、B、C、D等各种类型。

本产品能够适应1994年由PICMG（PCI工业计算机制造商协会）所标准化的Compact PCI总线系统，作为这些工业单板机的标准总线，将成为在全世界广泛普及的下一代连接器。

Series 8071 is 2.0mm pitch board to board hard metric connector developed for high speed signals and EMI-protection in computers, large network server and telecommunication equipments, conforming to IEC1076-4-101.
It supports Compact-PCI Bus system that was standardized by PICMG (PCI Industrial Computer Manufacturers Group) as the standard bus for industrial board computers.

◆AB型

这是最适用于传送系统等高密度安装（多极化）的带定位导向件的125极、AB型连接器。在规格等方面，则基于现有的多线模块连接器。

以A型（110极）的编码键安装部作为信号线，可以在维持定位导向功能的基础上实现多极化。

Series 8071 is a 125 positions connector, which can offer AB Type as one of it's option, designed to have the location guide optimized for high-density mounting (multi-positionization) of transmission system etc.. Its specification is compliant with the that of current multi-line module connector.
Allocation of coding key attachment area in A type (110 positions) to signal line achieved multi-positioning keeping the function of location guide

Hard Metric Connectors 硬性公制连接器

Series 8072

Plug Reverse A,Btype

系列名称(SERIES)	8072
极数(NO. OF POSITIONS)	95,110,125
间距(PITCH)	2.0mm Grid
额定电流(CURRENT)	AC/DC 1.0A CONTACT
额定电压(VOLTAGE)	AC/DC 250V CONTACT
耐压值(D.W. VOLTAGE)	750 Vrms/min

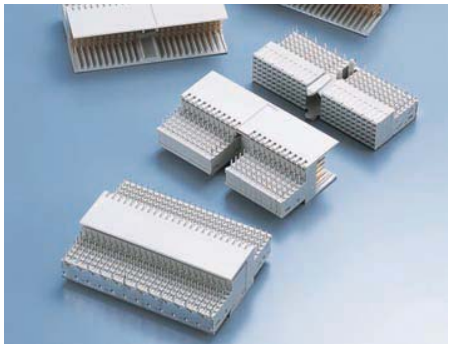

Series 8072

8072系列卧式安装型连接器用于构成扩展卡，与8071系列插座连接器组合使用。连接器为5列，备有如下的品种。

- A型连接器：110线带编码键的压入式连接器。
- B型连接器：95、110、125线无编码键的压入式连接器。

Series 8072 horizontal type plug connector is used along with Series 8071 receptacle connector in order to make up the extender card. The connector consists of five rows and offers the following variation. Series 8072 also have a Vertical type receptacle.

- Type A Connector----110 lines press-in connector with coding key
- Type B Connector----95,110,125 lines press-in connector without coding key

◆带牛角

将多线模块连接器系列的电缆连接器“8073系列”的信号线由子板端拉出时使用。

This connector is designed for the extension of signal line from Series 8073, cable connector of multi-line module connector family, mounted on the daughter board.
Latch attachment structure additionally built into the existing Series 8072 Plug Right Angle connector.

Series 8073

Cable Connector

系列名称(SERIES)	8073
极数(NO. OF POSITIONS)	10,15,20,25,30
间距(PITCH)	2.0mm
额定电流(CURRENT)	AC/DC 1.0A CONTACT
额定电压(VOLTAGE)	AC/DC 250V CONTACT
耐压值(D.W. VOLTAGE)	750 Vrms/min
适用电线范围 (Applicable wire sizes)	AWG #26～30

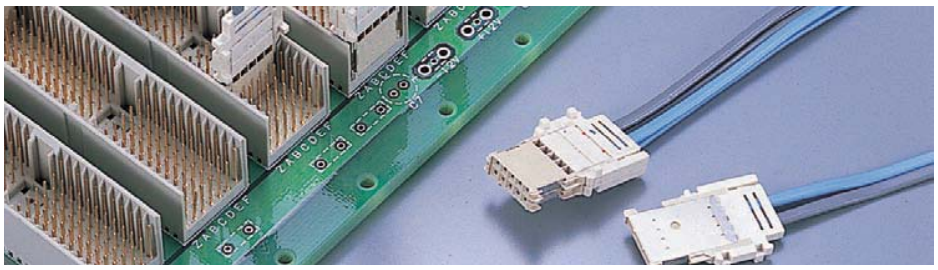

Series 8073

这是由8071系列连接器的背板处高效取出信号线的电缆连接器。连接器的种类有采取电磁干扰（EMI）和电磁兼容性（EMC）对策的屏蔽型和非屏蔽型两种。按照京瓷爱克独特的概念，分别堆叠了5极单一模块，以5极的倍数加以扩展。

Series 8073 is a cable connector designed to catch the signal emitted from the back plane of connector effectively. Shielded type for EMI and EMC control and Non-Shielded type are available. ELCO's original design concept enables the expansion of position in multiples of five by stacking each unit of five position modules.
Consequently this structure can also achieve the free combination of circuits in the field between the concentrating side and the branching side in multiples of five.

Hard Metric Connectors 硬性公制连接器

Series 8074
Series 8075

系列名称(SERIES)	8074/8075
高电流接触(High Power Contact)	
额定电流(CURRENT)	信号(Signal):0.7A 電源(Power supply): 20A
接触电阻(Contact Resistance)	1m Ω Max
插拔周期(Performance Class)	500 Max
同轴接触(Coax Plug/Receptacle Contact)	
特性阻抗 (Characteristic Impedance)	50Ω
使用频率范围 (Frequency Range)	30GHz Max
适用电线范围 (Applicable wire sizes)	2.5D-2V,1.5D-2V,0.8D
插拔周期(Performance Class)	500 Max

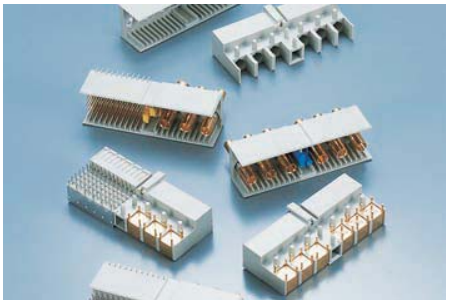

Series 8074、8075

8074系列是装填6个符合DIN41626标准的高电流、同轴接触件的L型插头绝缘体。在背板上安装时，将与绝缘体整体一体化的定位头压入适合的孔中即可实现固定。8075系列是混装55条信号线和3个高电流或同轴接触件的M型插头连接器。在背板上安装时，将压配接触件和与绝缘体整体一体化的定位头同时压入固定即可实现。

Series 8074 conforming to DIN41626 is L type plug insulator with 6 pieces of coaxial or 6 pieces of high current contacts. It's mounting on the backboard requires the press fitting of the insulator boss into the applied hole.
Series 8075 is M type plug connector with both signal 55 lines and high current (or 3 pieces of coaxial contacts) mounted. Its mounting on the backboard requires the simultaneous press fitting of the press-fit contact and insulator boss.
Series 8489 contact conforming to DIN41626 and designed for high current or coaxial is attached on Series 8074 and 8075.
In the case of Series 8489, "cable to cable" and "cable to board" type contact are prepared. Two types (solder cup for soldering and crimping) are offered for the attachment of contact cable for high currency. Also the contact extracting tool for the crimping operation and maintenance is prepared.

Series 8077

系列名称(SERIES)	8077
极数(NO. OF POSITIONS)	D Type 220P(receptacle:176P) E Type 250P(receptacle:200P)
间距(PITCH)	2.0mm
额定电流(CURRENT)	AC/DC 0.75A CONTACT
额定电压(VOLTAGE)	AC/DC 250V CONTACT
耐压值(D.W. VOLTAGE)	750 Vrms/min

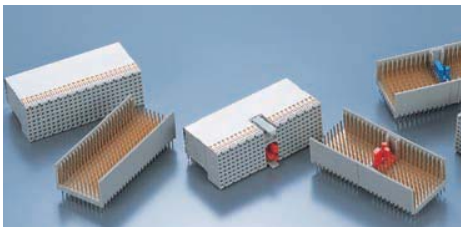

Series 8077

8077系列是适应传送系统等的高速化和防止电磁波噪音的要求而开发的2.0mm 硬性公制多线模块连接器，是8071、8072、8073、8074、8075系列的追加产品，也是最适于高密度安装（多极化）的B＋2列型。关于规格等，基于多线模块连接器。带有编码键的为D型，无编码键的为E型。

Series 8077 is the additional version to series 8071.8072.8073.8074 and 8075 of 2.0mm hard metric multi-line module connector which have been developed based on the requirement of electric transmission system etc., for high speed and EMI control.
This connector is a 8+2 rows type optimized for high-density high pin count and is designed following same with multi-line module connector.
It is offered in two types, D type with coding key and E type without coding key.

Series 9203

系列名称(SERIES)	9203
极数(NO. OF POSITIONS)	4
额定电流(CURRENT)	DC 35A CONTACT
额定电压(VOLTAGE)	DC 250V CONTACT
耐压值(D.W. VOLTAGE)	750 Vrms/min

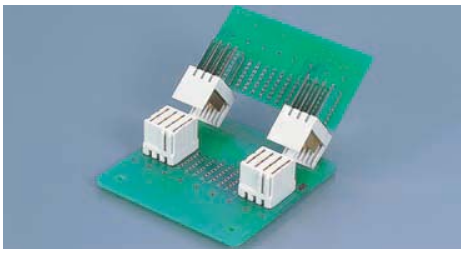

Series 9203

9023系列是为了给plug-in-board电源装置以及大型机器系统的系统卡提供电源而开发的电源用连接器。与原有产品相比，端子使用了高导电率材料，实现了大电流通电。

采用了以4极为一个连接器单位连续搭配的累积构造，可以组合成一个以4为倍数极的连接器使用。

由于插座侧的接点弹簧采用了分散式接点，从而减轻了与插头侧嵌合时的阻力。

Series 9203 is a power supply connector designed for the plug-in-board unit or the system card of the large-scale system. Different from existing power supply connectors, a new material that has a high electric conductivity is adopted to enable a large current to be carried.
It is stackable to be used in numbers of connectors in a unit of 4 positions to provide larger-scale system.
The split-type spring contact used in the receptacle connector reduces the force to mate and unmate.

High Density Connectors 高密度多极连接器

Series 8378

2.0mm GRID METRIC DIN

系列名称(SERIES)	8378
极数(NO. OF POSITIONS)	246
间距(PITCH)	2.0×2.0mm
额定电流(CURRENT)	AC/DC 1A CONTACT
额定电压(VOLTAGE)	AC/DC 250V CONTACT
耐压值(D.W. VOLTAGE)	1,000 Vrms/min
压配方法 (PRESS-FIT)	$0.8^{+0.025}_{-0.02}$mm(下孔径) (Prepared hole diameter) $0.7^{+0.07}_{-0.05}$mm(完成径) (Finished diameter)

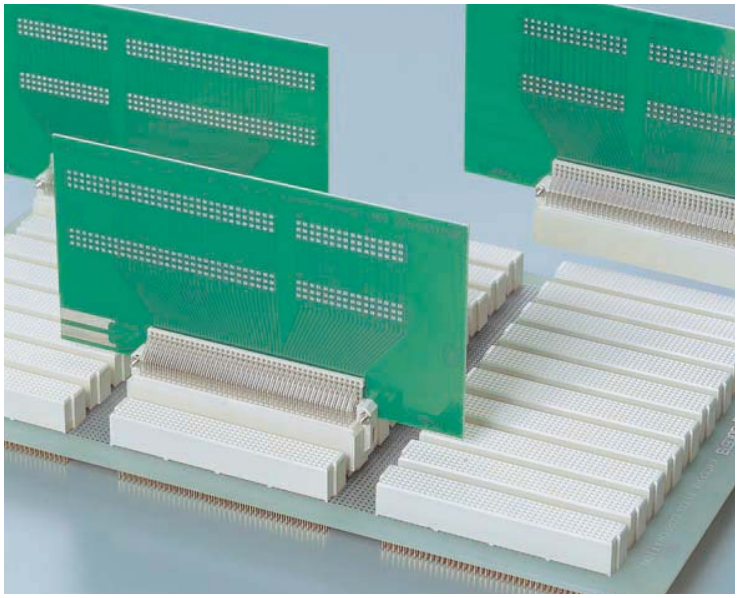

Series 8378

这是与工业和办公设备的信号高速化相对应的超高密度多极连接器，与过去的DIN128极连接器尺寸相同，但却达到246极，间距为2mm。可以在使用DIN的原有系统中混合使用。

Series 8378 is 2.0mm pitch of high-density and multiple contact connector designed to meet the trend of higher signal speed in industrial, information equipments and peripheral achieving 246 positions by the same size with the current 128 positions DIN connector.
The use in the current system for DIN connector is possible.

Series 8377

系列名称(SERIES)	8377
极数(NO. OF POSITIONS)	162
间距(PITCH)	2.54×1.905mm
额定电流(CURRENT)	AC/DC 1.5A CONTACT
额定电压(VOLTAGE)	AC/DC 250V CONTACT
耐压值(D.W. VOLTAGE)	1,000 Vrms/min

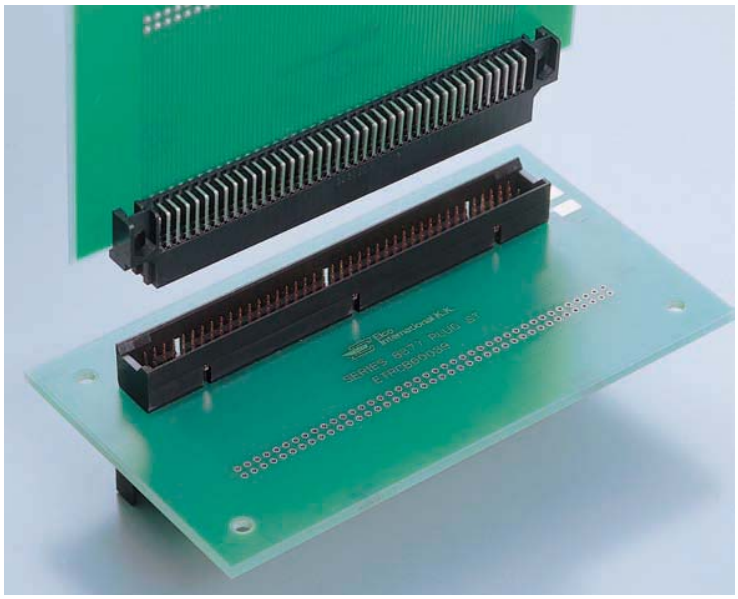

Series 8377

这是高密度、多极连接器，连接器本身是具有LIF结构的低差拔型。插头端为压配型，可在电路板的两侧连接子卡。

Series 8377 is high-density and multiple contact LIF connector. Plug side is a press-fit type enabling the connection of daughter board on both sides of substrate.

Power Supply Connectors 电源连接器

Series 9110

BtoB
SMT TYPE

系列名称(SERIES)	9110
极数(NO. OF POSITIONS)	8
嵌合高度(PROFILE HEIGHT)	2.0mm
间距(PITCH)	2.2mm
额定电压(VOLTAGE)	AC 250V CONTACT
耐压值(D.W. VOLTAGE)	500 Vrms/min

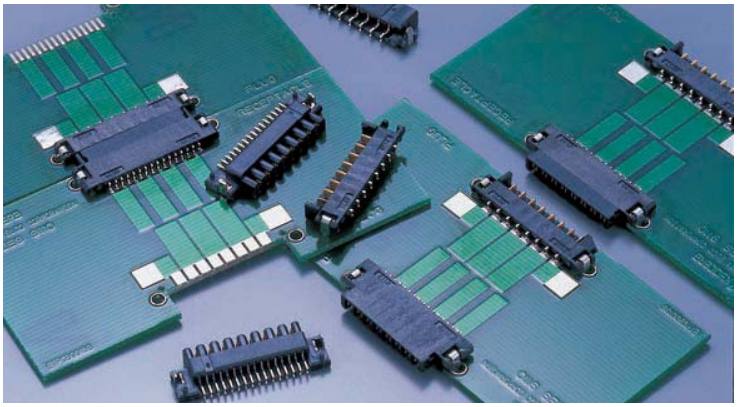

Series 9110

9110系列是适应薄型笔记本电脑、移动PC等电源连接器的小型化、低背化、高电流容量化的要求而开发的板对板SMT型电源连接器。

Series 9110 is a board to board SMT type power connector designed to comply with the market requirements of high space performance, low-profile and high current voltage of Slim Notebook-PC,Mobile PC and so on.

Series 9090

系列名称(SERIES)	9090
极数(NO. OF POSITIONS)	1,2,3,4,5,6,9,12,15
间距(PITCH)	6.35mm
额定电压(VOLTAGE)	AC 600V CONTACT
耐压值(D.W. VOLTAGE)	
(转播用 for repeater)	5,000 Vrms/min
(基板用 for board)	2,500 Vrms/min

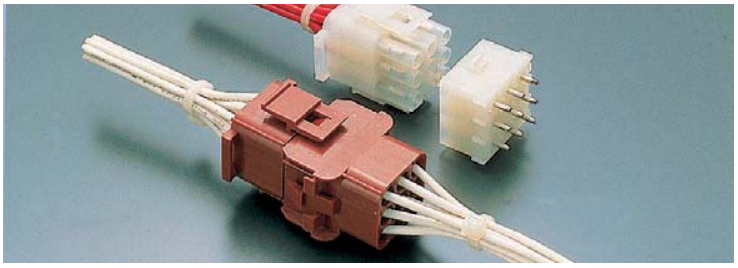

Series 9090

这是作为中继器进行线对线或板对线、面板装配等具有多种应用的系列。触点为压接用，备有插针型和插座型等产品。

Series 9090 is power connector, crimp type contact.
It can be applied to many applications including cable to cable, board to cable and panel mounting.
It is available to pin type and socket type.

Series 5090

系列名称(SERIES)	5090
极数(NO. OF POSITIONS)	2,4,9
间距(PITCH)	9.0mm
额定电压(VOLTAGE)	AC 600V CONTACT
耐压值(D.W. VOLTAGE)	5,000 Vrms/min

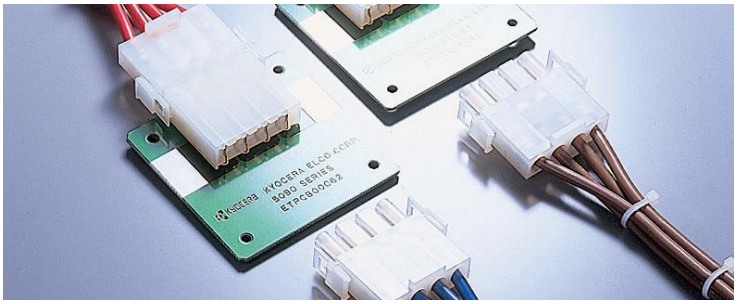

Series 5090

这是大电流用电源连接器，有中继用（2极、9极）和电路板用（4极）产品。基本设计系基于本公司的可变电容器，最大额定电流30A，可满足基于UL498的试验电压280V、试验电流45A、功率因数0.75的开关试验250次。

Series 5090 is the power connector designed for high current applications. It is available for both cable-to-cable combination (9 and 2 positions) and board to cable (4 positions). Basic design is based on ELCO's VARICON, maximum rated current 30A, product are passed 250 times switching test under UL498, which is test voltage 280V, test current 45A and power factor 0.75.

Rack and Panel Connectors 机柜连接器

Series 8016
Series 8017
Series 8026

系列名称(SERIES)	8016
极数(NO. OF POSITIONS)	20、38、56、90、120
间距(PITCH)	3.81×3.81/3.81×3.30mm
额定电流(CURRENT)	AC/DC 8.5A(10Contacts)
额定电压(VOLTAGE)	AC 250V CONTACT
耐压值(D.W. VOLTAGE)	1,250 Vrms／min

系列名称(SERIES)	8017
极数(NO. OF POSITIONS)	75、100、130
间距(PITCH)	1.91×3.81mm
额定电流(CURRENT)	AC/DC 8.5A(10Contacts)
额定电压(VOLTAGE)	AC 250V CONTACT
耐压值(D.W. VOLTAGE)	1,500 Vrms／min

系列名称(SERIES)	8026
极数(NO. OF POSITIONS)	33、117、165
间距(PITCH)	2.54×2.54/3.18×3.18mm
额定电流(CURRENT)	AC/DC 5A CONTACT
额定电压(VOLTAGE)	AC 125V CONTACT
耐压值(D.W. VOLTAGE)	1,000 Vrms／min

这是具有高可靠性的I/O用矩形连接器，使用了京瓷爱克自主开发的阴阳同型可变电容接触件。其特点在于，一对同型的接触件以十字形接触，以产生很大的擦拭作用。机柜连接器的结构具有利用螺钉旋转进行嵌合的驱动螺杆机构、嵌合时连接器具有方向性、同时具有防止误嵌合的导向销插座等独特的设计。接线方法可以选择压接、焊接或绕接。同时也可提供MIL认定产品。

ELCO's rack and panel connectors are highly reliable I/O rectangular type, using VARICON hermaphroditic contacts (developed by ELCO) in both plug and receptacle. The VARICON contact features a cross-shaped four-face contact structure using a pair of balanced spring beams, thereby producing smooth multipoint contacts and wide wiping action surfaces. The structure is uniquely designed to contain the actuating screw mechanism to ensure tight fit by screw thread, and the guide pin and socket to provide the connector with orientation after fitting and to prevent incorrect fitting. Offered in the crimp, tab soldering, and wire wrapping types. Also, those with MIL-conformed specifications are available.

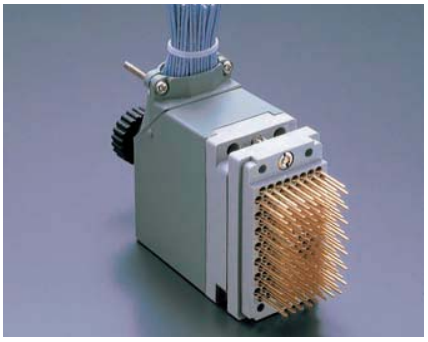

Series 8016

Series 8017

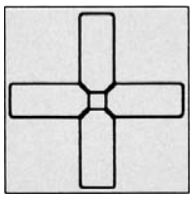

接触截面 Contact Profile

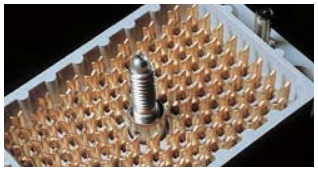

Series 8026

Series 8027

系列名称(SERIES)	8027
极数(NO. OF POSITIONS)	30
间距(PITCH)	6.35×6.35mm
额定电流(CURRENT)	AC/DC 6A/CONTACT
额定电压(VOLTAGE)	AC 500V CONTACT
耐压值(D.W. VOLTAGE)	2,500 Vrms／min

Series 8027

这是将阴阳同型的概念扩大到绝缘体而开发的连接器。用于大电流和高耐电压电路。

Series 8027 applies the hermaphroditic concept to insulator. It is developed for use in high current and high withStanding voltage circuits.

Rack and Panel Connectors 机柜连接器

Series 8014

系列名称(SERIES)	8014
极数(NO. OF POSITIONS)	50,64
间距(PITCH)	4.0×4.0mm(8.0)
额定电流(CURRENT)	AC/DC 2A CONTACT
额定电压(VOLTAGE)	AC 125V DC 110V CONTACT
耐压值(D.W. VOLTAGE)	2,000 Vrms/min

Series 8014

这是针对车辆、电力和化学等设备控制所开发的带金属壳、公制型、直接式I/O连接器，具有高密度、高可靠性、大处理容量、易于维护检查等性能。

ELCO original invented VARICON of metric type direct I/O connector covered with metal shell developed for use in vehicles and control operations of power and chemical plants featuring high density, high reliability, large capacity and high maintainability.

Series 8024
Series 8029

系列名称(SERIES)	8024/8029
极数(NO. OF POSITIONS)	72
间距(PITCH)	8024：3.81×3.81mm 8029：5.08×5.08mm
额定电流(CURRENT)	8024：AC/DC 6.5A CONTACT 8029：AC/DC 6A CONTACT
额定电压(VOLTAGE)	—
耐压值(D.W. VOLTAGE)	1,500 Vrms/min

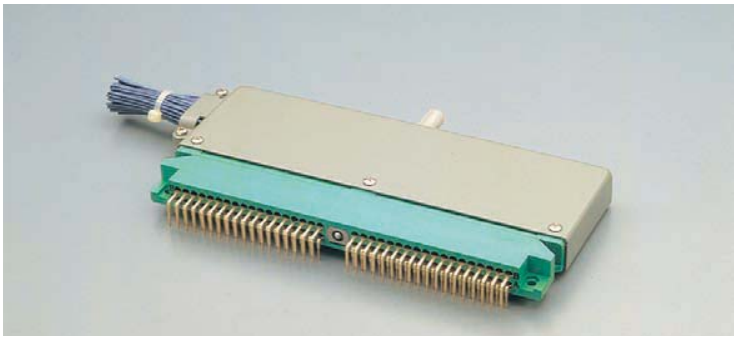

Series 8024

这是针对电力、化学和钢铁等设备控制所开发的大电流、直接式I/O连接器，使用可变电容接触件，具有高密度、高可靠性、大处理容量、易于维护检查等性能。

Series 8024/8029 are high currency carrying direct I/O connector developed for use in control operations of power, chemical and steel plants. These are using VARICON contacts and featuring high-density, high reliability, large capacity, and high maintainability.

Series 8223

系列名称(SERIES)	8223
极数(NO. OF POSITIONS)	24.48.72.96
间距(PITCH)	2.54mm
额定电流(CURRENT)	AC/DC 3A CONTACT
额定电压(VOLTAGE)	AC 125V CONTACT
耐压值(D.W. VOLTAGE)	1,000 Vrms/min

Series 8223

这是具有丰富品种的双片、P.C.连接器的典型系列，系使用微型可变电容接触件的小型、高密度产品。

Typical series of two pieces P.C.connector offered in a wide variety of variation.Mini-VARICON contacts are applied to this small and high density connector.

Wire to Wire/Board (Gold plated) Connectors

Series 9021

系列名称(SERIES)	9021
极数(NO. OF POSITIONS)	2~20(Single) 14、20、26、30、36、40(Dual)
间距(PITCH)	2.54mm
额定电流(CURRENT)	AC/DC 2.5A CONTACT
额定电压(VOLTAGE)	AC/DC 250V CONTACT
耐压值(D.W. VOLTAGE)	750 Vrms/min

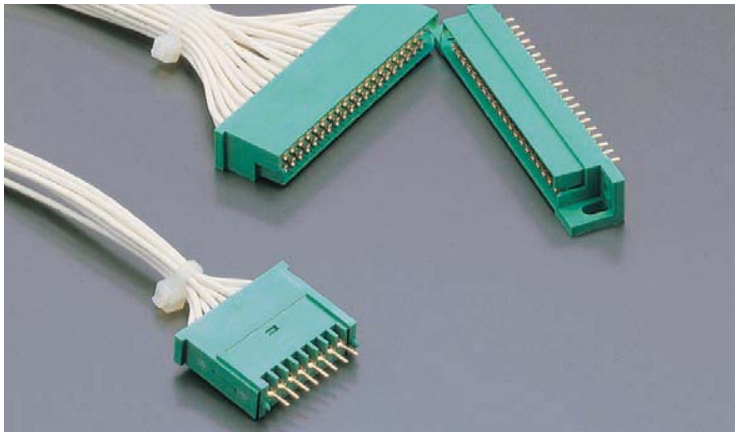

Series 9021

这是京瓷爱克以在高温潮湿的严酷气象条件下能够受用为目的而自主开发的连接器，它具有高密度、高可靠性、多样性等特性。采用了抗腐蚀性气体能力强、耐振性、耐冲击性优异的具有柔软弹簧特性的双弹簧和多点接触。由于是阴阳同型、金属对金属的接触，不受塑料的变形和尺寸精度的影响,实现了长寿命和高可靠性。采用耐扭曲设计，可防止插拔时的过载，具有优异的耐久性。

A high density, multi-purpose, versatile model developed by ELCO to withstand severe operating environment under high temperature and humidity. Newly employed characteristic is a double spring mulitipoint contact stronger than ever corrosive atmosphere and having pliable spring characteristic against vibration and shock. Because of hermaphroditic metal-to-metal contact, the connector is free from plastics deformation and not affected in dimensional accuracy, hence a long-life and high reliability. Overload in insertion and drawout is prevented because it is of anti-forcing design. It has outstanding endurance.

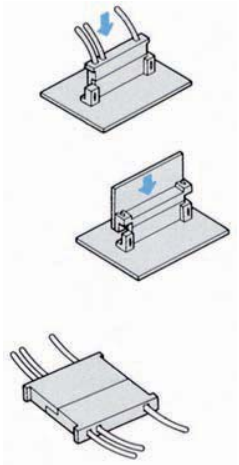

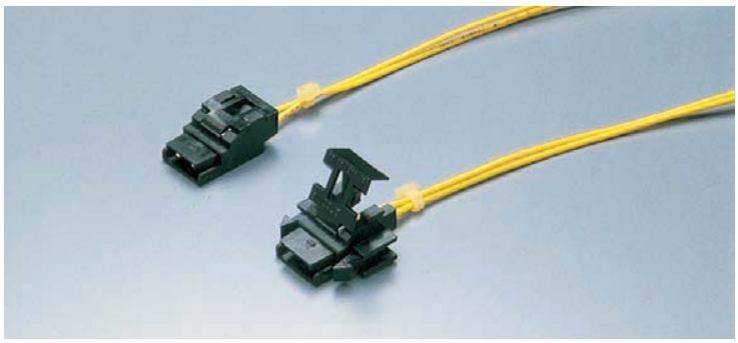

Series 9021 浪涌限止器

◆浪涌限止器

能够内装阻断反电动势二极管的浪涌限止器连接器。用于防止发生电子仪器的噪声干扰。为小型、简便的面板安装型。具有插座接触件、铰链盖结构。由于将引线插座设置在中央部,容易进行二极管的安装和交换。与9021系列的连接器具有兼容性。

◆SURGE ARRESTER

A surge arrester connector capable of incorporating diode(s) that cuts a counter e.m.f.to prevent occurence of noise trouble in electronic equipment. The connector is of socket contact and hinged cover construction. Since a lead socket is placed at the center of the connector, mounting and replacement of the diode are carried out very easily. The connector is interchangeable with Series 9021 connectors.

Wire to Wire/Board (Tin plated) Connectors 线对线/线对板连接器

Series 8083

系列名称(SERIES)	8083
极数(NO. OF POSITIONS)	2～20
间距(PITCH)	1.5mm
额定电流(CURRENT)	AC/DC 1.0A CONTACT(AWG#28) AC/DC 2.0A CONTACT(AWG#26)
额定电压(VOLTAGE)	AC/DC 50V CONTACT
耐压值(D.W. Voltage)	500 Vrms/min
适用电线范围 (Applicable wire sizes)	

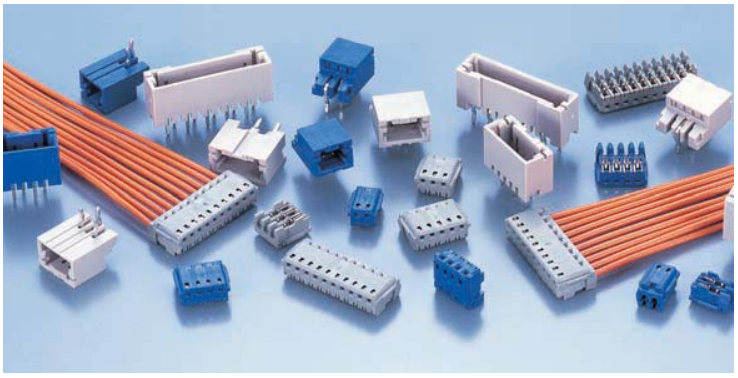

Series 8083

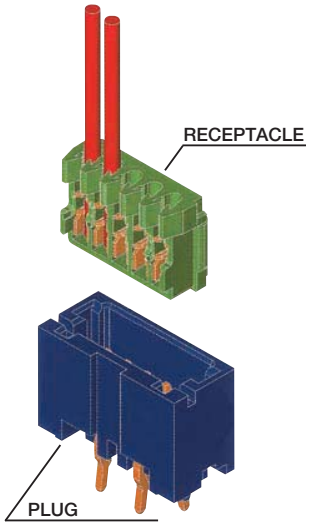

◆概要

808 3系列主要是针对民用设备而开发的间距1.5 mm、超小型板对线（B to W）连接器。插头端为针式端板连接器，备有垂直型和直角型。插座端为无需剥除导线绝缘外皮即可整体接线的IDC（绝缘刺破压接）型，可以用自动压接进行线束生产。

可在设备的小型化、提高作业性能方面发挥作用。

◆特点

(1) 适用导线为AWG #26_#28。是间距1.5 mm的超小型板对线连接器。
(2) 接触部采用了高可靠性的多点接触结构，可防止磨损腐蚀。
(3) 备有蓝色、灰色两种颜色的品种。

◆Outline

Series 8083 is 1.5mm pitch board to wire connector developed especially for the commercial equipment use. Plug is the post type header connector supplied by both Vertical and Right Angle type. Receptacle is the IDC type for easy wire connection, by which harness production of auto IDC machine can be achieved. It contributes to the miniaturization of equipment and the improvement of operability.

◆Features

(1) Micro-miniaturized board to wire connector with the applicable wire of AWG#26-#28.
(2) Contact area is designed to have the high-reliable multi-contact structure with preventing from fretting corrosion.
(3) Offered in blue and gray color.

Series 8263

微型ELMEC
MINI-ELMEC

系列名称(SERIES)	8263
极数(NO. OF POSITIONS)	2～15
间距(PITCH)	2.5mm
额定电流(CURRENT)	AC/DC 3A CONTACT
额定电压(VOLTAGE)	AC/DC 250V CONTACT
耐压值(D.W. VOLTAGE)	1000 Vrms/min
适用电线范围 (Applicable wire sizes)	AWG #20～28
UL FILE No.	E67646

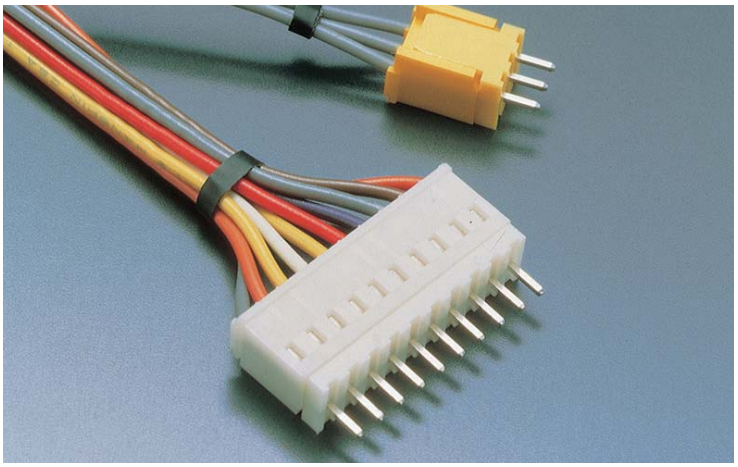

Series 8263

这是间距为2.5 mm的镀锡连接器，有垂直型和直角型。插座接触件和公插针的触点为6点接触结构，可以防止磨损腐蚀。

A 2.5mm pitch, tin-plated connector of Vertical and Right Angle type. Concept of receptacle contact with plug pin is 6-point contact structure witch prevents fretting corrosion.

Wire to Wire/Board (Tin plated) Connectors 线对线/线对板连接器

Series 8263

中继连接器
INTER CONNECTION

系列名称(SERIES)	8263
极数(NO. OF POSITIONS)	2,3,4,6,8,10(free hunging type) 2,3,4,6,8,10,11(panel mounting type)
适用电线范围 (Applicable wire sizes)	AWG #22～28

其它说明与8263系列相同
Other specifications are the same for series 8263.

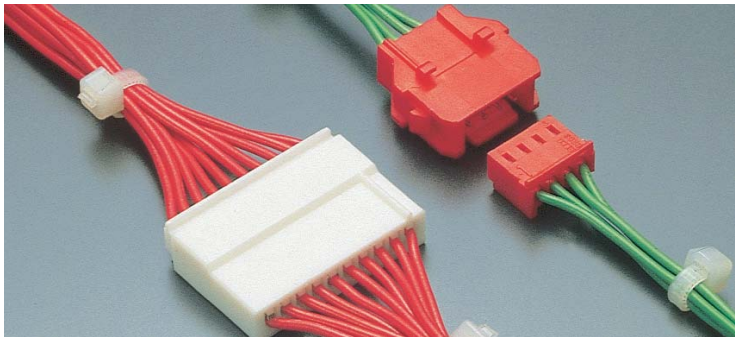

Series 8263 中继连接器

8263系列是与微型ELMEC的插座嵌合的线对线插头，有自由悬吊型和面板安装型两种。

A plug is for cable-to-cable connection to fit in a receptacle of 8263 MINI-ELMEC.It includes two types of free hanging and panel mounting types.

Series 8283

超微型ELMEC
SUPER MINI-ELMEC

系列名称(SERIES)	8283
极数(NO. OF POSITIONS)	2～16
间距(PITCH)	2.0mm
额定电流(CURRENT)	AC/DC 3A CONTACT
额定电压(VOLTAGE)	AC/DC 125V CONTACT
耐压值(D.W. VOLTAGE)	1000 Vrms/min
适用电线范围 (Applicable wire sizes)	AWG #22～30
UL FILE No.	E67646

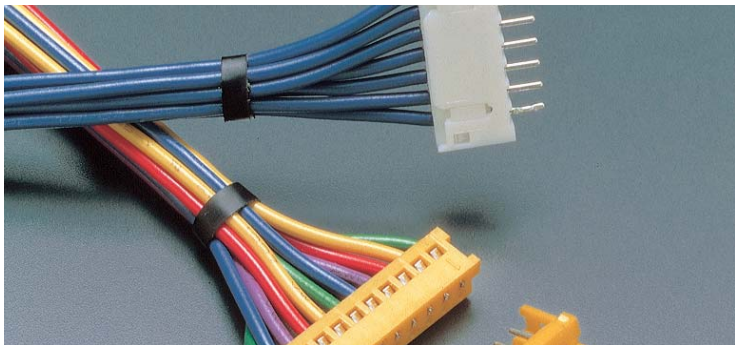

Series 8283

这是间距2.0 mm的镀锡连接器，有垂直型和直角型。插座接触件和公插针的触点为具有高度可靠性的多点接触结构，可以防止磨损腐蚀。

A 2.0mm pitch, tin-plated connector of Vertical and Right Angle type. Contact of receptacle contact with plug pins has high reliability multicontact structure preventing fretting corrosion.

Series 8283IDC

系列名称(SERIES)	8283 IDC
极数(NO. OF POSITIONS)	2～13
间距(PITCH)	2.0mm
额定电流(CURRENT)	AC/DC 1A CONTACT
额定电压(VOLTAGE)	AC/DC 125V CONTACT
耐压值(D.W. VOLTAGE)	1000 Vrms/min
适用电线范围 (Applicable wire sizes)	AWG #26,#28

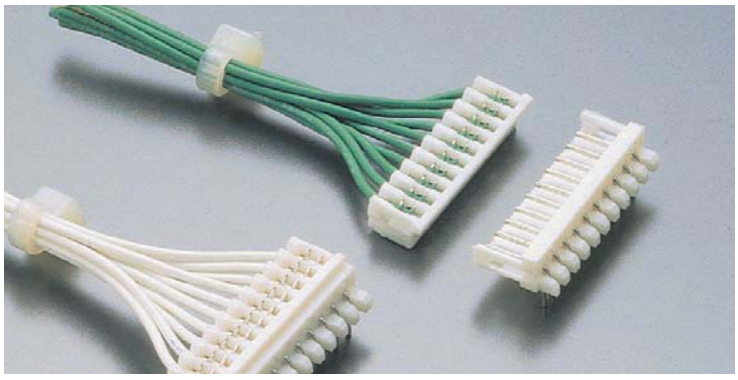

Series 8283 IDC

这是无需剥除导线绝缘外皮即可整体接线的IDC（绝缘刺破压接）型插座连接器，插头使用8283系列。导线可使用分立导线和带形电缆。

An IDC (Insulation Displacement Connector) type is receptacle connector of making gang termination without removing insulation. Plug uses the one for Series 8283. Discrete wire and ribbon cables can be used as lead wires.

Wire to Wire/Board (Tin plated) Connectors 线对线/线对板连接器

Series 9073

系列名称(SERIES)	9073
极数(NO. OF POSITIONS)	2～16
间距(PITCH)	2.0mm
额定电流(CURRENT)	AC/DC 1A CONTACT
额定电压(VOLTAGE)	AC/DC 125V CONTACT
耐压值(D.W. VOLTAGE)	1000 Vrms/min
适用电线范围 (Applicable wire sizes)	AWG #24～30

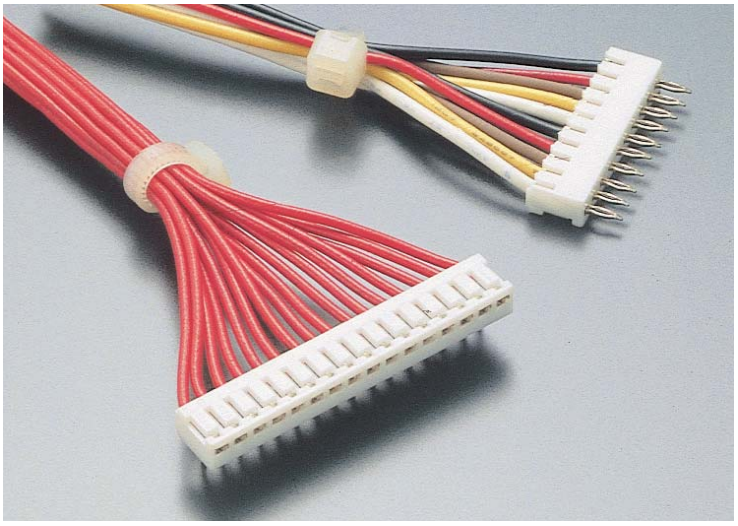

Series 9073

这是在电路板上直接插入接触件的直接接板式连接器，有垂直型和直角型两种类型。其一大特点是这两种类型的连接器均可以使用同一绝缘体。

Series 9073 is a board-in type connector for inserting contacts directly into a board. The connector includes both types of Right Angle mounting and Vertical mounting. The connector features the use of the same insulator either for Vertical type or for Right Angle type.

Series 9073IDC

系列名称(SERIES)	9073 IDC
极数(NO. OF POSITIONS)	2～12
间距(PITCH)	2.0mm
额定电流(CURRENT)	AC/DC 1A CONTACT
额定电压(VOLTAGE)	AC/DC 125V CONTACT
耐压值(D.W. VOLTAGE)	1000 Vrms/min
适用电线范围 (Applicable wire sizes)	AWG #26、#28

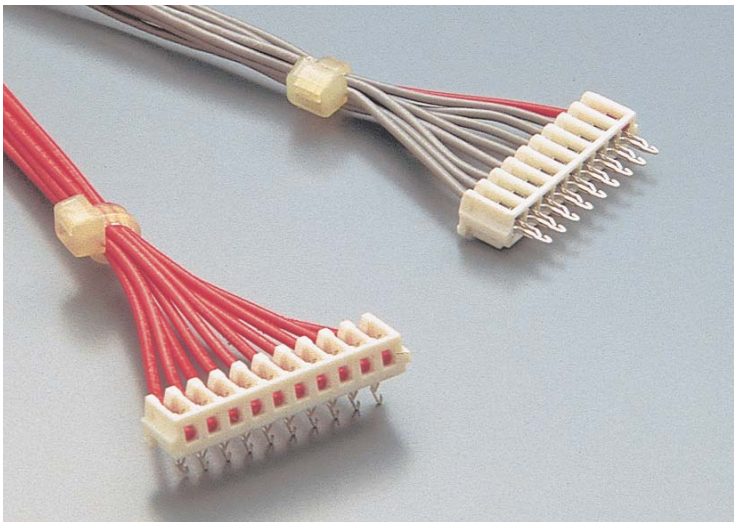

Series 9073 IDC

这是无需剥除导线绝缘外皮即可整体接线的IDC（绝缘刺破压接）型直接接板式连接器，导线可使用分立导线和带形电缆。

Series 9073 (IDC) is a board-in type connector for inserting contacts directly into a board. This is an IDC termination using discrete wires or ribbon cables.

Miniature Wire to Board Connectors 超小型线对板连接器

Series 8040

系列名称(SERIES)	8040
极数(NO. OF POSITIONS)	2
间距(PITCH)	1.0mm
额定电流(CURRENT)	AC/DC 1A CONTACT
额定电压(VOLTAGE)	AC/DC 30V CONTACT
耐压值(D.W. VOLTAGE)	500 Vrms/min

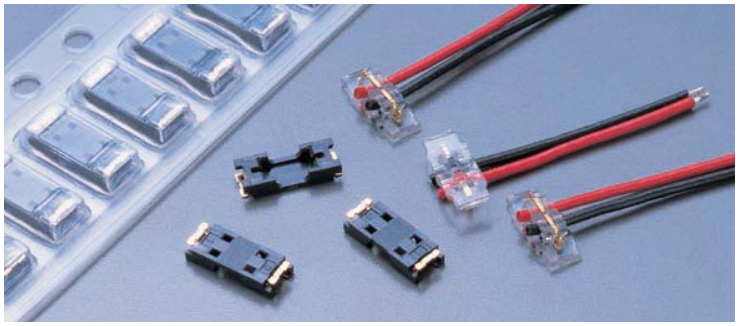

Series 8040

◆概要

8040系列是适应市场上高密度安装的要求，特别是针对便携式小型设备而开发的间距1.0mm、嵌合高度1.4mm、极数2极的超小型、超低高型线对板连接器。

◆特点

(1) 实现了全行业最低高H=1.4mm。与本公司原有产品（8000系列）相比，体积约为38.5%，大大节省了空间。

(2) 采用了抗振动、抗跌落冲击的「双接点结构」，具有高度的接触可靠性。此外还采用了与原有产品相同的AWG32#电线。

(3) 采用了抗冲击、抗振动的胶座锁定构造。在实现了低高度的同时具备良好的嵌合手感以及保持力。

(4) 采用了本公司独创的端子形状，具有防止爬锡的作用。

◆Outline

Series 8040 is a super small and low-profile wire to board type connector of 1.0mm-pitch, 1.4mm of mating height with two-contact to meet the market requirement for high density package especially designed for small type of mobile devices.

◆Features

(1)1.4mm height of the lowest profile in the field is achieved. Also approximately 38.5% of space saving in volume is realized as compared with our conventional product (Series 8000).

(2)Double-sided contact structure is adopted to enhance the resistance to vibration or drop shock, also to ensure the high contact reliability. AWG#32, a wire of the standard type, is applicable as ever.

(3)Insulator locking structure is adopted to ensure the tolerance of impact and vibration, which enables the firm clicking response and the assured retention force in mating even with its low profile.

(4)The KEC-unique tail shape is very effective in protecting the solder wicking.

Miniature Wire to Board Connectors 超小型线对板连接器

Series 8000

系列名称(SERIES)	8000
极数(NO. OF POSITIONS)	2
间距(PITCH)	1.0mm
额定电流(CURRENT)	AC/DC 1A CONTACT
额定电压(VOLTAGE)	AC/DC 30V CONTACT
耐压值(D.W. VOLTAGE)	100 Vrms/min

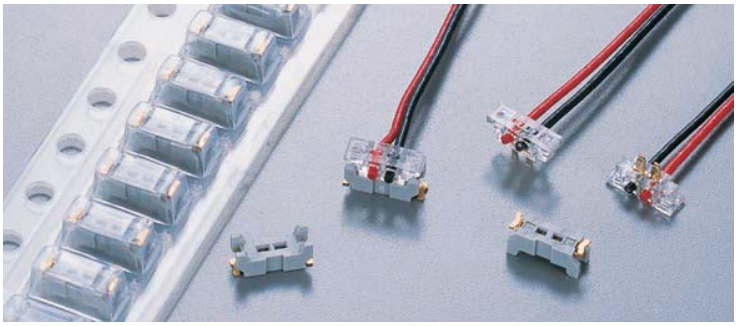

Series 8000

◆概要

8000系列是适应市场上高密度安装的要求、特别是针对手持式小型设备而开发的间距1.0 mm、嵌合高度2.79 mm、极数为2极的超小型、超低背型线对板连接器。

◆特点

(1) 与本公司的原有产品（8005系列）相比，体积约为27%，大大节省了空间。

(2) 采用了抗冲击和抗振动的绝缘体锁紧结构，可牢固嵌合。

(3) 插头连接器采用了无需剥除导线绝缘外皮即可整体接线的IDC（绝缘刺破压接）型，虽然是AWG #32的细线，通过在绝缘体穿通导线而压接，可以获得牢固的连接和高可靠性。

◆Outline

Series 8000 is 1.0mm pitch, super small and low-profile of wire to board type connector, 2.79mm of mating height with two contacts to meet the market requirement for high density package especially designed for small type of mobile devices.

◆Features

(1)It is realized that space saving by 27% in volume as compared with our conventional product (Series 8005).

(2)Insulator locking structure that is tolerant of dropping impact and vibration is adopted taking account of its mounting style, which assures its mating with a firm clicking response.

(3)IDC plug connector enables a bundle of connection with non-strip wires. Crimping the wire of AWG#32 through the insulator attains secure connection and high reliability.

Series 8005

系列名称(SERIES)	8005
极数(NO. OF POSITIONS)	2
间距(PITCH)	1.27mm
额定电流(CURRENT)	AC/DC 1A CONTACT
额定电压(VOLTAGE)	AC/DC 30V CONTACT
耐压值(D.W. VOLTAGE)	500 Vrms/min

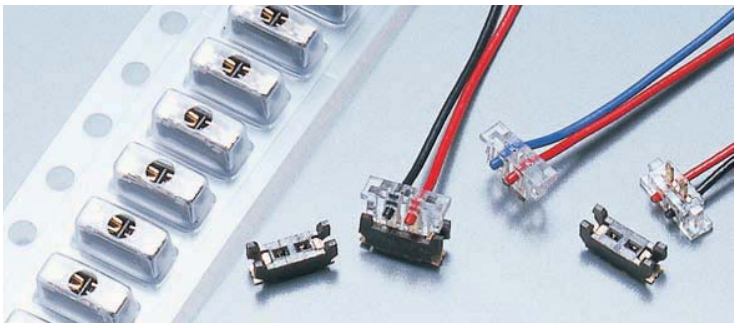

Series 8005

8005系列是适应市场上高密度安装的要求、特别是针对手持式小型设备而开发的超小型线对板连接器。

这种连接器可在PHS、移动电话、笔记本电脑、PDA等各种手持式电子设备的紧凑化方面发挥作用。

Series 8005 is a super compact 2-pin **W**ire to board connector, designed for high density mounting. This is the most suitable for miniaturization of such hand-held devices as mobile phones, Notebook-PC, PDA's equipment, etc.

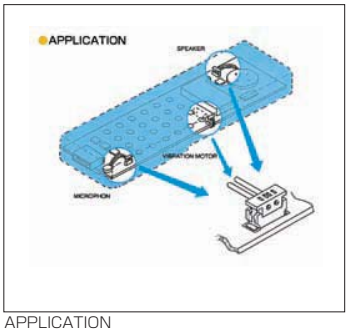

APPLICATION

Miniature Wire to Board Connectors 超小型线对板连接器

Series 8015

系列名称(SERIES)	8015
极数(NO. OF POSITIONS)	2
间距(PITCH)	1.27mm
额定电流(CURRENT)	AC/DC 1A CONTACT
额定电压(VOLTAGE)	AC/DC 30V CONTACT
耐压值(D.W. VOLTAGE)	500 Vrms/min

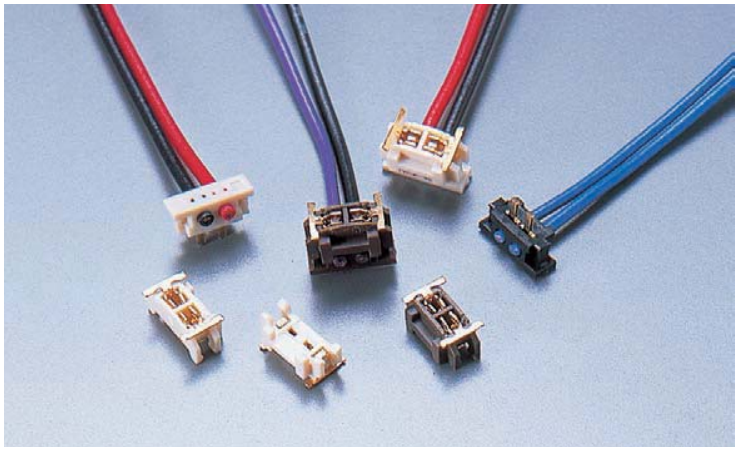

Series 8015

这是以与8005系列相同的概念开发的、适应AWG #30的超小型2极线对板连接器。

Series 8015 is a super compact 2-way wire to board connector with a polarization key that accommodates the wire size AWG #30, based on the same concept as series 8005. Recommending application is for longer wire length.

Memory Card Connectors 存储卡连接器

Series 5025

PCMCIA

系列名称(SERIES)	5025
极数(NO. OF POSITIONS)	68、136 (ESD附有接头) (with ESD terminal)
间距(PITCH)	1.27mm
额定电流(CURRENT)	AC/DC 0.5A CONTACT
额定电压(VOLTAGE)	AC/DC 5V CONTACT
耐压值(D.W. VOLTAGE)	500 Vrms／min

Series 5025

这是适应设备小型化要求的薄型连接器。宽度最大为10 mm，与本公司原有设备相比，面积减少23%，相当节省空间。同时，弹出器单件重量比原有类型少32%，大大减轻了重量。适用于PCMCIA TYPE Ⅰ、Ⅱ、Ⅲ。插头的上下段可实现DIP/SMT、DIP/DIP、SMT/SMT（带 TORSON）的组合。

Slim type product which is designed to accommodate the current trend of miniaturization in the equipment. This series conforms to meets the requirements of Ver.4.2./PCMCIA Type I, II and III specification.
Upper and lower stage of header enables the combination of Through Hole/SMT, Through Hole/Through Hole, SMT/SMT (with TORSON).

Memory Card Connectors 存储卡连接器

Series 5027

PCMCIA

系列名称(SERIES)	5027
极数(NO. OF POSITIONS)	68,136
间距(PITCH)	1.27mm
额定电流(CURRENT)	AC/DC 0.5A CONTACT
额定电压(VOLTAGE)	AC/DC 5V CONTACT
耐压值(D.W. VOLTAGE)	500 Vrms／min

Series 5027

这是适应市场对薄型的要求而开发的小型低重量SMT型IC卡连接器。高度5.0 mm、重量10 g以下（带单式弹出器），是全行业重量最轻的。双型是减小高度的两个并列型。可以选择有/无弹出机构。适用于PCMCIA TYPE Ⅰ、Ⅱ、Ⅲ。

Series 5027 is the small and SMT type PCMCIA header which conforms to PCMCIA specification. Profile height is 5.0mm, weight is under 10grams (with single ejector mechanism) the lightest in this industry.
Dual type is 2pieces, side-by-side configuration and you can choose "With Ejector type" or "Without Ejector type".
Also available 2.2mm stand off. Header connector keying is available 3.3V or 5.0V also normal and reverse.

Series 5069

PCMCIA

系列名称(SERIES)	5069
极数(NO. OF POSITIONS)	68
间距(PITCH)	1.27mm
额定电流(CURRENT)	AC/DC 0.5A CONTACT
额定电压(VOLTAGE)	AC/DC 5V CONTACT
耐压值(D.W. VOLTAGE)	500 Vrms／min

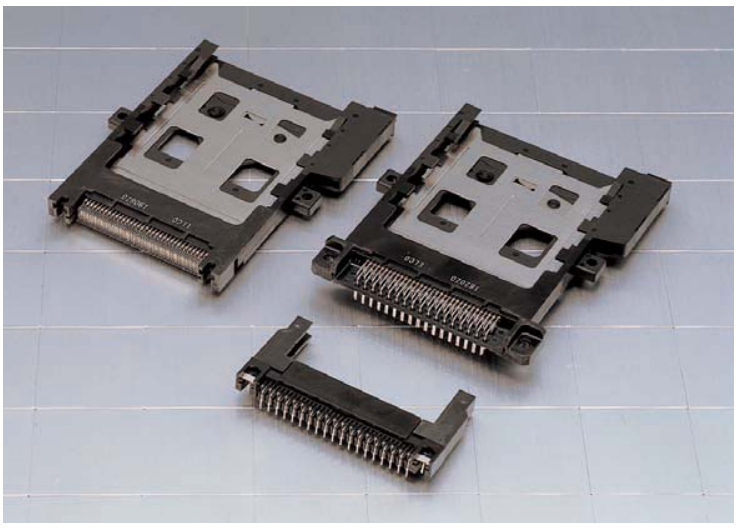

Series 5069

这是PC卡用的68极插头连接器，适用于JEIDA VER－4。

间距1.27 mm。卡端为2列配置，电路板端有DIP型和SMT型。同时还备有插座端（卡端）连接器。

Series 5069 is 1.27mm pitch 68 positions plug connector designed for PC card, conforming to JEIDA Ver-4. Contacts on the card side are arranged in two rows and the substrate side has Through Hole and SMT type. Receptacle (Card side) connector is also prepared.

Memory Card Connectors 存储卡连接器

Series 5610
Series 5620
Series 5611
Series 5612

闪存卡连接器
Compact Flash

系列名称(SERIES)	TYPE Ⅰ：5610 TYPE Ⅱ：5620
极数(NO. OF POSITIONS)	50
间距(PITCH)	1.27mmGrid Tail Pitch 0.635mm
额定电流(CURRENT)	AC/DC 0.5A CONTACT
额定电压(VOLTAGE)	AC/DC 5V CONTACT
耐压值(D.W. VOLTAGE)	500 Vrms/min

系列名称(SERIES)	5611/5612
极数(NO. OF POSITIONS)	50
间距(PITCH)	1.27mmGrid Tail Pitch Straddle：1.27mm Single Side：0.635mm
额定电流(CURRENT)	AC/DC 0.5A CONTACT
额定电压(VOLTAGE)	AC/DC 5V CONTACT
耐压值(D.W. VOLTAGE)	500 Vrms/min

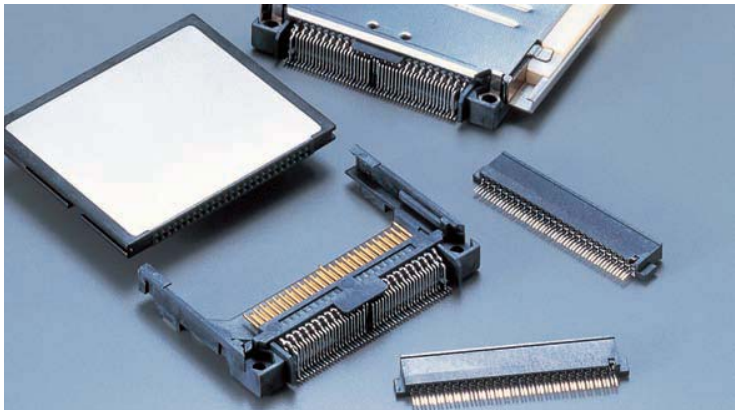

Series 5610/5611/5612

这是适用于数码相机、笔记本电脑、PDA等手持式小型设备所使用的闪存卡的存储卡连接器。备有插头连接器、弹出器（5610系列）和卡用插座连接器（5611系列）以及卡套件（5612系列）。

插头可以自动装载。按钮位置、定制设计等可灵活应对。同时，除普通规格（普通/双面）之外，还备有可在卡下方安装部件的元件离板型（H＝0/H＝2.2）。卡端连接器可以选择跨接型（夹住电路板）和单侧型的任何一种。

Series 5610, 5611 and 5612 are memory card connector supporting Compact Flash that is used for such small-sized devices as Digital Still Camera, Notebook-PC, PDA, etc.
Series 5610 and Series 5620 consisted of header connector and ejector, Series 5611 of card receptacle connector and Series 5612 of card kit are prepared.
The header supports auto-mounting processes. It flexibly complies with any kind of ejector-button position and customized design. In addition to the normal and reverse type, stand-off type (H=0 / H=2.2) can also be offered, which enables the components to be mounted on the back side of card. Series 5611 connector used for card side has optional variations of straddle mount type and single side mount type.

Series 5038

多媒体卡连接器
Multi Media Card

系列名称(SERIES)	5038
极数(NO. OF POSITIONS)	7
间距(PITCH)	2.5mm
额定电流(CURRENT)	AC/DC 0.5A CONTACT
额定电压(VOLTAGE)	AC/DC 5V CONTACT
耐压值(D.W. VOLTAGE)	500 Vrms/min

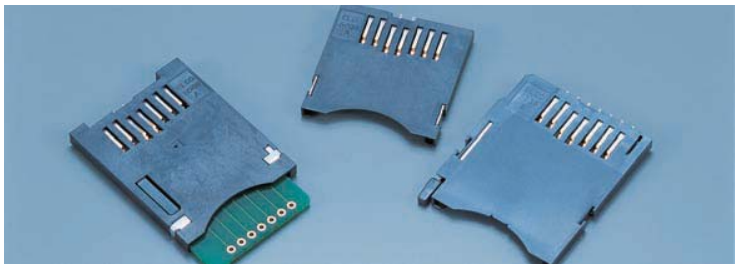

Series 5038

◆概要

5038系列是适应市场上高密度安装的要求、特别是针对薄型笔记本电脑、手持式小型设备而开发的MMC（多媒体卡）用连接器。

◆特点

(1) SMT、单面型、双面型
(2) 与MMC卡尺寸32 mm×24 mm×1.4 mm相对应
(3) 可以选择有/无弹出器机构，卡容易插拔，还备有带弹簧弹出器型号。
(4) 电路板上高度为2.6 mm，低背设计。
(5) 虽然是低背设计，但采用了卡不直接与电路板接触的导轨型。
(6) 插拔耐久性可达10,000次。

◆Outline

Series 5038 is the MMC(Multi Media Card)Connector developed to comply with the requirement of high-density mounting in the market and designed especially for the slim type Notebook-PC and Portable equipments.

◆Features

(1)High durability for 10,000 cycle mating.
(2)SMT, normal and reverse.
(3)Correspond to the size of MMC card (32mmx24mmx1.4mm).
(4)Both Ejector and Non-Ejector type offered and optional. Ejector type achieves easy insertion and separation of card.
(5)Low-profile of as much as 2.6mm
(6)Adoption of guide rail type which prevents the direct contact of card on the board for the low-profile design.

Memory Card Connectors 存储卡连接器

Series 5638

SDMC

系列名称(SERIES)	5638
极数(NO. OF POSITIONS)	9
高度(PROFILE HEIGHT)	H=2.9mm(3.0mmMAX)
间距(PITCH)	依据SDMC规格Conforming to SDMC standard
额定电流(CURRENT)	AC/DC 0.5A CONTACT
额定电压(VOLTAGE)	AC/DC 5V CONTACT
耐压值(D.W. VOLTAGE)	500 Vrms／min

Series 5638

◆概要

5638系列是作为手持式设备的记录介质而受到注目的SDMC(SECURE DIGITAL MEMORY CARD)用连接器。

它是PDA、MP3播放机、移动PC、蜂窝电话、PHS、汽车导航器、DVC（数码摄像机）、DSC（数码照相机）以及这些设备的组合设备所广泛使用的产品。

◆特点

(1) 记忆卡插拔保证次数：10,000次。
(2) 依据SDMC规格。
(3) 电路板上最大高度3.0 mm的低背设计。
(4) 备有弹簧弹出器型和无弹出器的普通型和双面型等品种。
(5) 还可以与MMC卡相对应。
(6) 虽然是低背设计，但采用了卡不直接与电路板接触的导轨型。
(7) 带有可以牢固安装的金属保持件。
(8) 卡检测开关使用了卡接触端子的独特设计结构。
(9) 可自动装载，压纹带包装。

◆Outline

Series 5638 is SDMC (Secure Digital Memory Card) connector as the recording medium of portable device, which can be widely introduced into the market of PDA, MP3 player, Mobile PC, Cellular Phone, PHS, Car Navigation System, DVC (Digital Video Camera), DSC (Digital Still Camera) and complex machine of these applications.

◆Features

(1)High durability for 10,000 cycle mating.
(2)Conforming to SDMC
(3)Low profile design 3.0mm maximum high on the board
(4)Both spring eject type and non-eject type offered in the normal and reverse structure
(5)Corresponding to MMC Card.
(6)Adoption of guide rail type to prevent the card from contacting the board directly despite the low profile design.
(7)Equipped with retention metal to meet the needs of secure mounting.
(8)Card detection switch of original design making use of card contact terminal.
(9)Designed for automatic mounting machine, packaged in tape and reel.

Series 5338

mini SD

系列名称(SERIES)	5338
极数(NO. OF POSITIONS)	11
间距(PITCH)	依据mini SD规格
额定电流(CURRENT)	AC/DC 0.5A CONTACT
额定电压(VOLTAGE)	AC/DC 5V CONTACT
耐压值(D.W. VOLTAGE)	500 Vrms/min

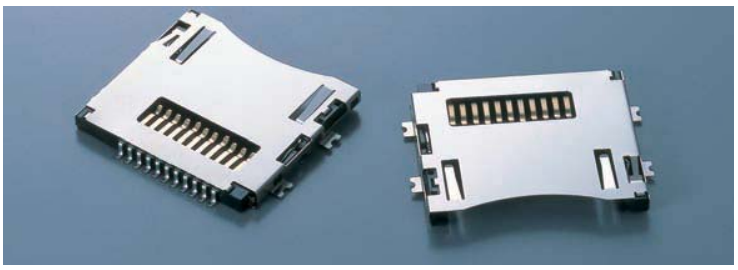
Series 5338

◆概要

5338系列是根据SD卡标准的标准化团体“SD卡协会”（SDA）所制定的miniSD标准而开发的连接器。

它是移动终端、下一代移动电话等市场所广泛使用的产品。

◆特点

(1) 根据SD卡标准的标准化团体“SD卡协会”（SDA）所制定的miniSD标准，保证卡的插拔次数达10,000次。
(2) 卡的押入方向为双面型，采用了易于操作的弹出机构，插拔操作更牢靠，用户友好设计。
(3) 比原有SD卡节省空间（与本公司原有5738系列相比）约52.2%以上。
(4) 带有miniSD卡的检测开关，能够检测是否插卡。
(5) 可自动装载。

◆Outline

Series 5338 conforms to the miniSD standard provided by "SD association"(SDA).
This product is able to use a wide range of applications in the market of hand-held equipment, cellular phones, and etc.

◆Features

(1)It conforms to the miniSD standard defined by "SD association" (SDA) that is the SD cards standards setting body. Guaranteed number of insertion and ejection of the card: 10,000 times.
(2)A miniSD card is turned upside down on being inserted. The user-friendly spring-eject mechanism is adopted to obtain the strong clicking feeling on insertion and ejection.
(3)It is downsized by 52.2% and more in volume as compared with the conventional SD card (Series5738).
(4)It is equipped with the card detection switch to check whether a card is inserted or not.
(5)Designed for automatic mounting machine, packaged in tape and reel.

Memory Card Connectors 存储卡连接器

Series 5036

SIM

系列名称(SERIES)	5036
极数(NO. OF POSITIONS)	6, 9
间距(PITCH)	1.27mm
额定电流(CURRENT)	AC/DC 0.5A CONTACT
额定电压(VOLTAGE)	AC/DC 5V CONTACT
耐压值(D.W. VOLTAGE)	500 Vrms/min

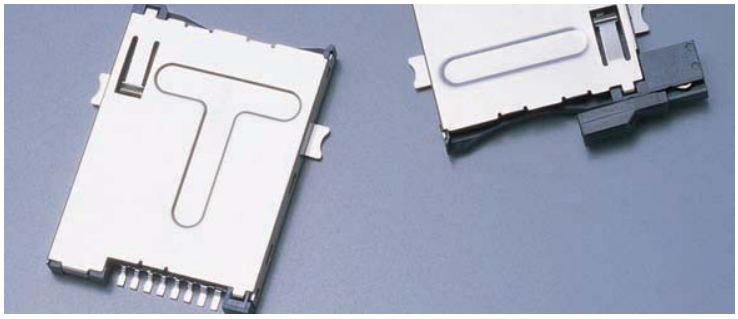

Series 5036

◆概要

5036系列是基于GSM（全球移动通信系统）标准（11.11）的SIM卡连接器。可用于ID卡、手持设备等。

◆特点

(1) 采用了易于操作的弹簧弹出机构，插拔操作更牢靠。

(2) 根据用途，备有6极或8极、装有防止SIM卡脱落的锁卡机构——带锁紧装置型和无锁紧装置型等丰富的产品。保证对严重振动或冲击具有耐久性，6极型还带有存储卡检测开关，能够检测是否插卡。

(3) 采用了金属壳，以作为EMI对策。

◆Outline

Series 5036 is a connector designed for SIM cards that conforms to the GSM standards (11. 11).
It has applicability to ID cards, portable devices and etc.

◆Features

(1)The spring-ejection mechanism obtains stronger clicking feeling on insertion and ejection.

(2) A wide range of variations are available such as 6 positions or 8 positions, with a lock or without a lock of the card retention mechanism that prevents SIM card coming off. The lock guarantees the durability against an excessive vibration or dropping impact, and 6 positions type services as a card detection switch that detects the existence of the card.

(3)Metal shell is adopted for EMI protection.

(4)High durability for 10,000 cycle mating.

Series 5738

SD-I/O

系列名称(SERIES)	5738
极数(NO. OF POSITIONS)	9
间距(PITCH)	2.5mm(1.7mm)
额定电流(CURRENT)	AC/DC 0.5A CONTACT
额定电压(VOLTAGE)	AC/DC 5V CONTACT
耐压值(D.W. VOLTAGE)	500 Vrms／min

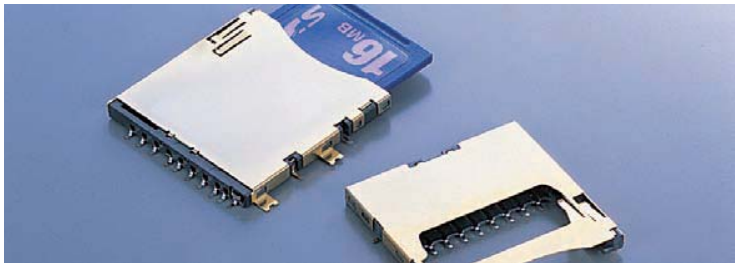

Series 5738

◆概要

5738系列是根据SD存储卡推荐团体SDA的I/O工作组所制定的SDIO标准而开发的SDIO存储卡连接器。

本产品可广泛应用于蜂窝电话、PHS、PDA、笔记本电脑、数字式AV设备的市场。

◆特点

(1) 基于SDA的I/O工作组所制定的SDIO标准而开发。保证卡的插拔次数达10,000次。

(2) 采用了易于操作的弹簧弹出机构，插拔操作更牢靠。

(3) 设置了开口部尺寸极小的屏蔽板，备有适用于笔记本电脑、数字式AV设备的外部端子和适用于移动电话或PDA的内部端子两种类型制品。

(4) 电路板上高度，外部端子型为2.8 mm，内部端子型为2.9 mm，低背设计。(一部分锁紧部除外)

(5) 带有SD卡的写入保护开关和检测是否插卡的检测开关。

◆Outline

Series 5738 is a SDIO connector complying with SDIO specifications defined by SDA I/O working group that recommends SD memory cards.
It provides a wide range of applications in the market of cellular phones, PHS, PDA, Notebook-PC and Digital AV apparatus.

◆Features

(1)It complies with SDIO specifications defined by SDA.

(2)High durability for 10,000 cycle mating.

(3)The spring-eject mechanism makes the clicking feeling in insertion and ejection strong.

(4)With the shield plate minimized in the size of opening, two-tail types are available, the outer tail type suitable for Notebook-PC and Digital AV apparatus, and inner tail type suitable for cellular phones and PDA.

(5)Low profile design on the board achieved with 2.8mm height of outer tail type and 2.9mm height of inner tail type. (The lock area excluded.)

(6)The write protection switch for SD card and the card detection switch to detect the existence of the card are equipped.

SO-DIMM Socket Connectors

SO-DIMM插座

Series 6402

系列名称(SERIES)	6402
极数(NO. OF POSITIONS)	144
高度(PROFILE HEIGHT)	4.0,5.2,5.6mm
间距(PITCH)	0.8mm
额定电流(CURRENT)	AC/DC 0.3A CONTACT
额定电压(VOLTAGE)	AC/DC 25V CONTACT
耐压值(D.W. VOLTAGE)	1,000 Vrms/min

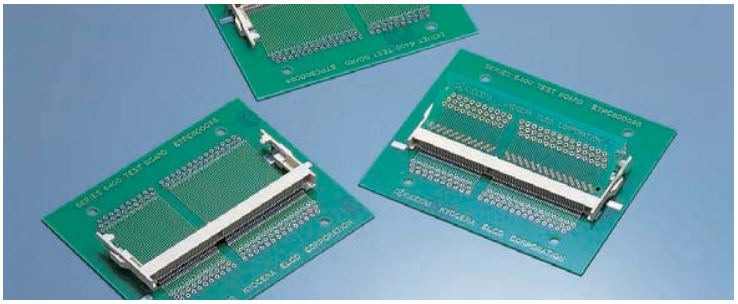

Series 6402

这是符合JEDEC标准8byte S.O.DIMM用直角型SMT、144极的连接器。电路板上高度H=4.0/5.2/5.6mm。采用了模塑牛角，成本较低。在插入存储模块时，先将电路板斜着插入后，再扳到水平位置即可完成，可牢固锁紧。

Series 6402 is Right Angle SMT connector, conforming to JEDEC standard of 8-byte S.O.DIMM. It is a low cost type connector with plastic latch and has a wide variety of stacking height (4.0/5.2/5.6mm). Memory modules are firmly inserted and locked by two simple actions.

Series 6401

系列名称(SERIES)	6401
极数(NO. OF POSITIONS)	72
高度(PROFILE HEIGHT)	5.5mm
间距(PITCH)	1.27mm
额定电流(CURRENT)	AC/DC 0.5A CONTACT
额定电压(VOLTAGE)	AC/DC 125V CONTACT
耐压值(D.W. VOLTAGE)	500 Vrms/min

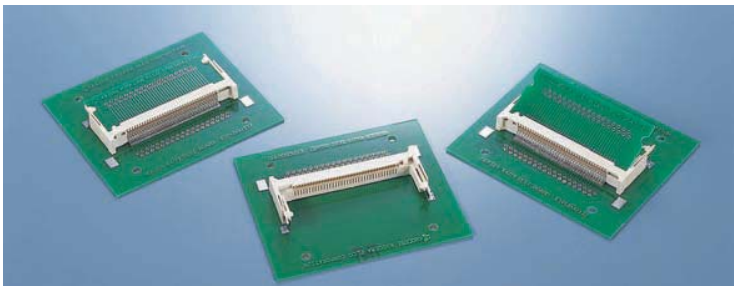

Series 6401

这是根据 JEDEC MO-160标准而用于S. O. DIMM的直角型SMT 72极的连接器。

Series 6401 is Right Angle SMT connector, conforming to JEDEC MO-160 standard of S.O.DIMM.

Series 6403

系列名称(SERIES)	6403
极数(NO. OF POSITIONS)	144
间距(PITCH)	0.8mm
额定电流(CURRENT)	AC/DC 0.3A CONTACT
额定电压(VOLTAGE)	AC/DC 25V CONTACT
耐压值(D.W. VOLTAGE)	1,000 Vrms/min

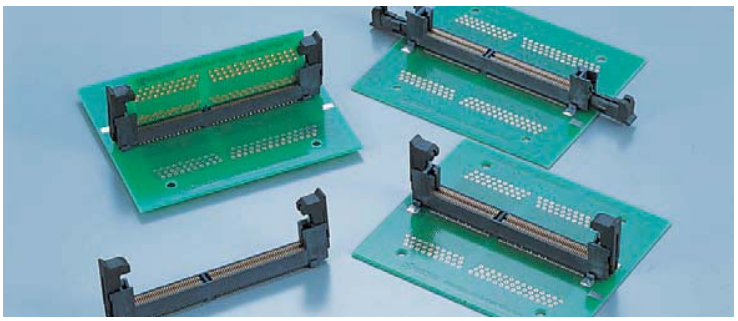

Series 6403

这是符合JEDEC标准8byte S.O.DIMM用垂直型SMT、144极的连接器。备有SMT型，DIP型（通孔金属型）两种。DIP/SMT分别有3.3 V和5.0 V类型，同时备有有定位头、无定位头的类型。

Series 6403 is 144positions Vertical connector conforming to JEDEC standard of 8-byte S.O.DIMM and by both SMT and Through Hole type.
SMT and Through Hole type are 3.3V and 5.0V type respectively. They are also available with and without boss.

DDR Socket Connectors DDR插座

Series 6406

系列名称(SERIES)	6406
极数(NO. OF POSITIONS)	200
间距(PITCH)	0.6mm
额定电流(CURRENT)	AC/DC 0.5A CONTACT
额定电压(VOLTAGE)	AC/DC 50V CONTACT
耐压值(D.W. VOLTAGE)	250 Vrms/min

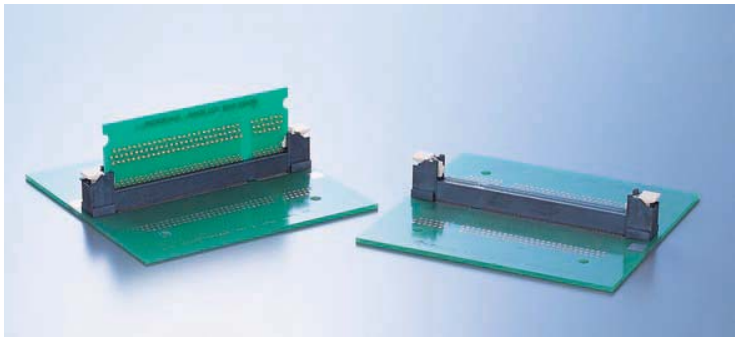

Series 6406

6406系列是适应市场上高速度、大容量存储器的要求而开发的间距0.6 mm、200极、SMT型、符合JEDEC MO224标准的DDR－S.O.DIMM连接器。

采用了立式结构，节省空间，可以在相邻部位搭载部件。

Series 6406 is a 0.6mm-pitch, 200-pin, SMT type DDR-S.O.DIMM connector conforming to JEDEC MO-224 that was developed based on the market requirements for memories with high-speed and large capacity.
Adopting the vertical type realizes space saving so that other components can be mounted on the adjacent area.

Mini-PCI Express Card Connectors Mini PCI Express卡连接器

Series 6407

系列名称(SERIES)	6407
极数(NO. OF POSITIONS)	52
间距(PITCH)	0.8mm
额定电流(CURRENT)	AC/DC 0.5A CONTACT
额定电压(VOLTAGE)	AC/DC 50V CONTACT
耐压值(D.W. VOLTAGE)	300 Vrms/min

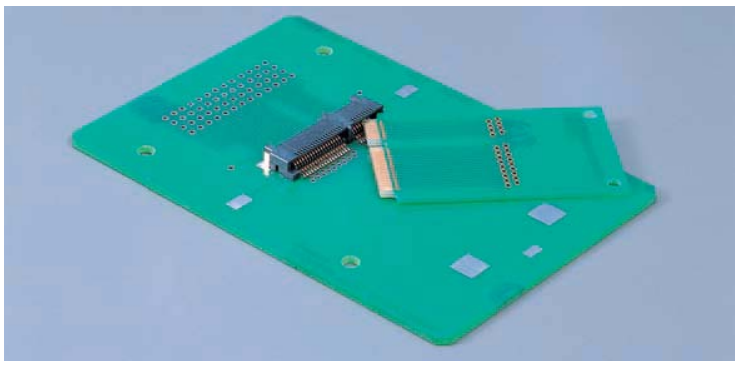

Series 6407

6407系列是根据行业团体PCI-SIG所规定的Mini PCI规格为基准开发的Mini PCI Express卡连接器。Mini PCI规格以能够最大限度发挥高速化CPU性能而倍受瞩目。PCI卡可在0到10度的范围内插入。接点部嵌合长度为1.5mm，具有高度的接触可靠性。

本产品备有用螺钉固定卡片方式，以及一个动作就可以将卡片固定的挂钩方式的两种类。

Series 6407 is a connector for Mini-PCI Express Card and fully compliant to Mini-PCI standards that is specified by PCI-SIG, the electronics industry consortium, and is familiar with the best usability of high-speed CPU performance. The card is able to be inserted at angles from 0 to 10 degrees. 1.5mm of the mating length realizes the high contact reliability.
The card is fixed by a screw through the stud or a latching mechanism that only requires an action.

Mini-PCI Type III Connectors 微型PCI型III连接器

Series 6405

系列名称(SERIES)	6405
极数(NO. OF POSITIONS)	124
间距(PITCH)	0.8mm
额定电流(CURRENT)	AC/DC 0.5A CONTACT
额定电压(VOLTAGE)	AC/DC 50V CONTACT
耐压值(D.W. VOLTAGE)	250 Vrms/min

Series 6405

◆概要

这是根据行业团体PCI-SIG所规定的微型PCI标准1.0所开发的微型PCI型III连接器。

◆特点

(1) 牛角部采用塑料，有效防止插拔微型PCI卡时卡端面被切削。同时由于内部加入了金属，插卡操作更牢靠。

(2) 产品品种丰富，高度有4 mm、5.2 mm、7.95 mm等。

(3) 这是无铅化的产品。

◆Outline

Series 6405 is Mini-PCI Type III connector complies with Mini-PCI standards 1.0 specified by PCI-SIG.

◆Features

(1)Adopting plastic for the latch part of the Mini-PCI card prevents the card edge from rubbing out when inserting and pulling out the card, and generates the sharp clicking response when inserting.

(2)Products of 4mm, 5.2mm and 7.95mm height are available.

(3)Applicable for lead free solder.

Interface I/O Connectors I/O接口连接器

Series 5123

移动电话

系列名称(SERIES)	5123
极数(NO. OF POSITIONS)	signal ; 18 power ; 1
间距(PITCH)	0.5mm
额定电流(CURRENT)	Signal Line ; AC/DC 1A/contact Power Line ; AC/DC 3A/contact
额定电压(VOLTAGE)	AC/DC 100V/contact
耐压值(D.W. VOLTAGE)	350 Vrms/min

Series 5123

◆概要

5123系列是作为与移动电话、汽车电话等外部设备连接接口用而开发的间距0.5 mm、SMT型18极I/O连接器。将可适合与天线等连接的同轴连接器1极、信号端子18极和电源端子一体化，该结构保证了优异的操作性能。同轴连接器带开关机构。

◆Outline

Series 5123 is SMT type connector developed as the interface with cellular phones and car-phones.
18 signal basic connector and 1 coaxial and/or power contacts as optional are integrated into this connector. It has excellent design for operability and its coaxial connector has switching function.

Interface I/O Connectors I/O接口连接器

Series 5124

移动电话

系列名称(SERIES)	5124
极数(NO. OF POSITIONS)	Signal:24
间距(PITCH)	0.5mm
额定电流(CURRENT)	Signal Line ; AC/DC 1A/contact
	Power Line ; AC/DC 3A/contact
额定电压(VOLTAGE)	AC/DC 100V CONTACT
耐压值(D.W. VOLTAGE)	350 Vrms/min

Series 5124

5124系列是作为与移动电话与外部设备的连接接口用而市场上广泛使用的间距0.5 mm、SMT型24极I/O连接器。符合TTA标准，插拔次数保证5000次。

将信号端子和电源端子一体化，是操作性能优异的设计结构。

Series 5124 is 0.5mm pitch, SMT type, 24pin I/O connector of which sales has been expanded in the market as an interface between cellular phones and peripheral equipment. Conforming to TTA standards, 5,000 cycle mating are guaranteed. The well-designed structure in which signal contacts and power contacts are integrated achieves the excellence in operation.

Series 5031

PHS

系列名称(SERIES)	5031
极数(NO. OF POSITIONS)	12
间距(PITCH)	0.8mm
额定电流(CURRENT)	AC/DC 0.5A CONTACT
额定电压(VOLTAGE)	AC/DC 125V CONTACT
耐压值(D.W. VOLTAGE)	300 Vrms/min

Series 5031

◆概要

5031系列是适应市场上手持设备小型化的要求、特别是用作PHS的接口而开发的符合RCRSTD.28标准的SMT12极 I/O连接器。

◆特点

(1) 极间距0.8 mm，非常小，对电路板的节省空间设计很有用。
(2) 与本公司同等产品相比，体积相当于约35％，可实现紧凑化。
(3) 可适用于PHS的高速数字通信。镀金触点保证了高可靠性。
(4) 接触部有壳体和模塑双重外罩，嵌合时抗扭性强，同时可防止焊剂飞溅。
(5) 可自动装载，为1000粒／卷盘的压纹带捆扎品。

◆Outline

Series 5031 is developed in order to comply with the market demand for the miniaturization of portable equipment, especially targeting the interface of PHS. It is SMT type 12positions I/O connector designed in conformity to RCR STD.28.

◆Features

(1)0.8mm narrow pitch contributing to the space-saving of board design.
(2)Designed for the high-speed digital communication by PHS securing the high reliability with the gold-plated contact.
(3)Contact area is covered by shell and molding effective against the twisting force during the mating and the flux wicking.
(4)Designed for automatic mounting machine, packaged in tape and reel.

Interface I/O Connectors I/O接口连接器

Series 5121

移动电话

系列名称(SERIES)	5121
极数(NO. OF POSITIONS)	signal;16 coaxial;1(with switch)
间距(PITCH)	1.0mm
额定电流(CURRENT)	AC/DC 1.0A CONTACT
额定电压(VOLTAGE)	AC/DC 125V CONTACT
耐压值(D.W. VOLTAGE)	350 Vrms／min

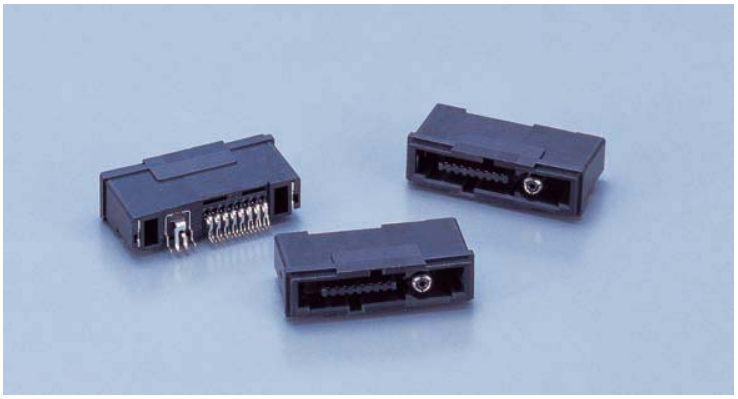

Series 5121

5121系列是作为与移动电话、汽车电话与外部设备的连接接口用而开发的SMT型连接器。将可适合与天线等连接的同轴连接器1极和信号端子16极一体化，该结构保证了优异的操作性能。同轴连接器带开关机构。

Series 5121 is SMT type connector developed as the interface with cellular phones and car-phones.
1 coaxial for antenna and 16 signal terminals are integrated into this connector. It has excellent design for operability and its coaxial connector has switching function.

Series 5141

mini-USB

系列名称(SERIES)	5141
极数(NO. OF POSITIONS)	5
间距(PITCH)	0.8mm
额定电流(CURRENT)	AC/DC 1.0A CONTACT
额定电压(VOLTAGE)	AC/DC 30V CONTACT
耐压值(D.W. VOLTAGE)	100 Vrms/min

Series 5141

◆概要

这是嵌合部、触点位置尺寸和性能符合USB标准的微型USB型B插座连接器。

◆特点

(1) 在壳体上设置背面屏蔽部分，提高EMI对策，同时将安装面积减小到最小。
(2) 给端子预加载，设置间隙，以防止插入插头时端子的弯曲破坏，同时在小行程下也可得到高接触压力，提高了接触可靠性。
(3) 触点部为点接触，去除了接触部的污染，从而产生擦拭作用，提高了接触可靠性。
(4) 为使连接器能够耐受坠落冲击，推荐壳体铆接部推荐采取焊接方式。

◆Outline

Series 5141 is mini-USB type B receptacle connector complied with USB standards for mating condition, position and dimensions of contacts, and its performance.

◆Features

(1)The rear shell is improved. The EMI shielding, also minimize the mounting area.
(2)The terminal is pre-loaded to obtain allowance, which prevents contacts from crashing, realizes high contact pressure by smaller strokes and improves the contact reliability.
(3)Point contact removes contamination on the contact by wiping effects to improve the contact reliability.
(4)It is recommended to solder the caulking part of the shell in order to resist dropping impact.

Automotive Connectors 汽车用连接器

Series 9215

系列名称(SERIES)	9215	
极数(NO. OF POSITIONS)		—
间距(PITCH)		—
额定电流(CURRENT)	AC/DC 10A	CONTACT
额定电压(VOLTAGE)	AC/DC 125V	CONTACT
耐压值(D.W. VOLTAGE)	1,000	Vrms/min

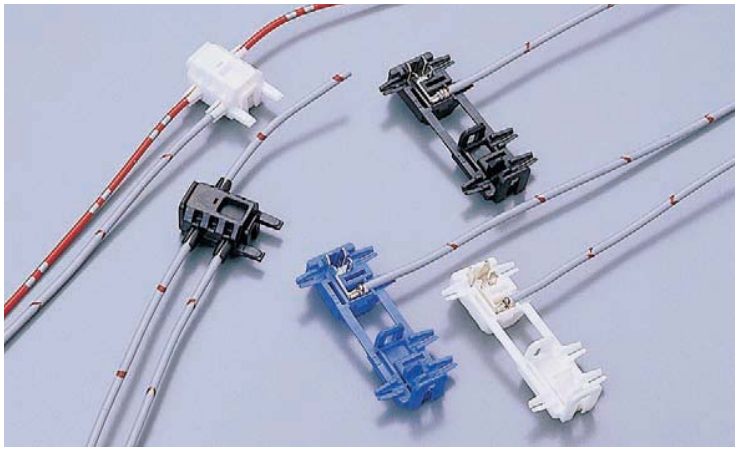

Series 9215

该系列为在增加汽车选购件时能够使用夹钳安装而开发的电路分路所用连接器。根据适用导线尺寸，以不同颜色加以区别。

Series 9215 is branch splice connector designed for easy attachment of additional option parts for automobile by use of pliers. Parts are color coded according to the applicable wire gauge.

Series 9515

系列名称(SERIES)	9515	
极数(NO. OF POSITIONS)		2,3,4
间距(PITCH)		2.8mm
额定电流(CURRENT)	AC/DC 3A	CONTACT
额定电压(VOLTAGE)	AC/DC 125V	CONTACT
耐压值(D.W. VOLTAGE)	1,000	Vrms/min

Series 9515

这是为汽车导线部件连接而开发的中继用防水连接器（根据使用状况防水效果有所不同）。

Series 9515 is water proof cable to cable connector developed for the door miller and/or connection of automobile electrical parts. (Water proof effect differs based on the condition of application.)

Microphone Holder 麦克风插座

麦克风插座是为提高用于移动电话的、直径为6 mm麦克风的安装效率而开发的。它可以简化过去的组装工序，使连接牢固。

麦克风插座本体的电路板上高度为2.5 mm，使用厚度1.3 mm的麦克风时，包括索环在电路板和外壳之间可留有3.0 mm的空间。

Microphone holder connector was developed to increase the mounting efficiency of microphone 6mm in diameter. It streamlines the current assembly process and also enables the firm connection.

The height of microphone holder body on the board is 2.5mm. The usage of microphone 1.3mm thick is able to have 3mm of space between board and case including grommet.

Series 9198

系列名称(SERIES)	9198
极数(NO. OF POSITIONS)	2
间距(PITCH)	1.75mm
额定电流(CURRENT)	AC/DC 1A CONTACT
额定电压(VOLTAGE)	AC/DC 30V CONTACT
耐压值(D.W. VOLTAGE)	500 Vrms/min

Series 9198

这是SMT型的麦克风插座。
可自动装载，压纹带捆扎包装。

Series 9198 is a SMT type microphone holder connector.
It is designed for automatic mounting machine, packaged in tape and reel.

Shield Lock 屏蔽锁

Series 8069

系列名称(SERIES)	8069
额定电流(CURRENT)	AC/DC 0.5A CONTACT
额定电压(VOLTAGE)	AC/DC 5V CONTACT

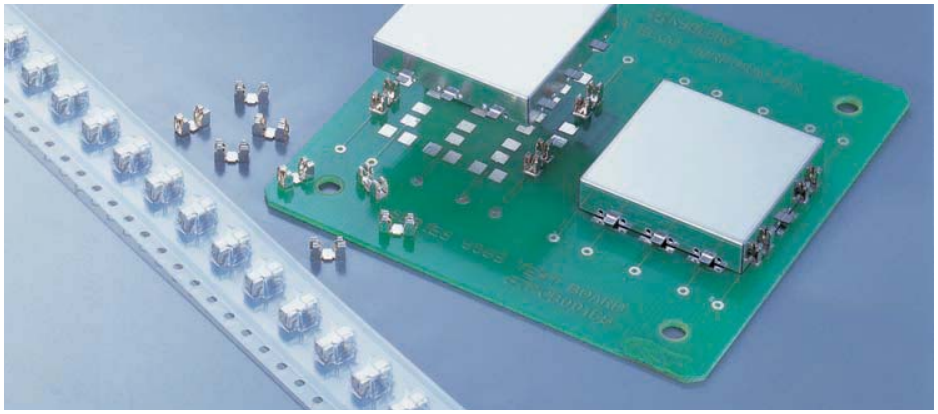

Series 8069

◆概要

8069系列“屏蔽锁”是为固定数字媒体产品的设备内部所使用的屏蔽罩而开发的小型端子。通过使用“屏蔽锁”，过去手工焊接安装屏蔽罩的作业，只需要一按即可完成。另外，屏蔽锁和屏蔽罩是可以装拆的。屏蔽罩内的部件更换和维修等作业效率得到了显著提高。

◆特点

(1) 本产品为可与屏蔽罩板厚0.2 mm相对应的产品。
(2) 屏蔽锁中接触部和锁定部的弹簧结构构成一对，设在点对称的两处，可以与屏蔽罩有牢固的接触和保持。
(3) 可自动装载，为3000粒／卷盘的压纹带捆扎品。

◆Outline

Series 8069 called "shield lock" is a small terminal developed for the fixation of shield case used inside of digital-media product equipement.
The use of "shield lock" simplifies the operation for the shield case attachment by the current manual soldering into one-touch operation.
Also, shield lock and shield case have a structure enabling the disconnection which drastically improves the operability of parts replacement and maintenance in shield case.

◆Features

(1)Corresponding to 0.2mm shield case.
(2)Shield lock can securely contact and hold shield case by one piece structure of contact area and lock area which is point-symmetrically located in two places.
(3)Designed for automatic mounting machine, packaged in tape and reel. (3,000 pieces/reel)

Press-Fit Connectors 压配连接器

压配系统
Press-Fit System

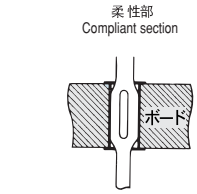

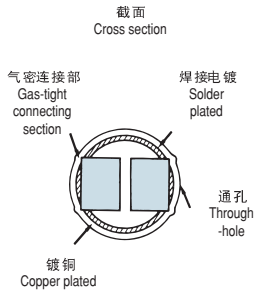

Total package system

压配连接器是向印刷电路板通孔压入接触件而不需要焊接的连接系统。其高可靠性和系统引进后总成本的降低，十几年来已经被客户的使用业绩所证实。

◆总封装系统

京瓷爱克正在进行从以DIN 41612标准连接器为中心的VME总线、多总线Ⅱ、经PICMG所标准化的紧凑型PCI总线标准的背板组装、子架安装、组装电源系统子架安装的系列化生产。在确认背板规格、连接器规格、电源规格、最终外径尺寸等之后，可提供总封装系统。对于客户来说，这一系统具有不需要进行安装设计和安装作业，不需要性能、质量等管理，不需要部件采购和保有库存等多种优点，可以降低总成本。

ELCO's press-fit card-edge connectors are a solderless connecting system in which contacts are press fitted into through holes of the printed circuit board. High reliability and cost saving effect of the system is supported by the consumers' application results well over a decade.

◆Total package system

ELCO conducts the continuous production of backboard assembly, sub-rack mounting and power built-in system sub-rack mounting, some of which are specified by VME BASS, Multi-BASS Ⅱ and COMPACT PCI BASS of PICMG standard. Backboard specification, connector specification, power specification, final outside dimension etc.can be confirmed and proposed/delivered to customer. This system holds following superior points and contributes to following merits at customer side. Free from mounting design and mounting process. Free from performance and quality control. Free from parts procurement and stock control.

Series 9069

电源插块
Power Insert

系列名称(SERIES)	9069
极数(NO. OF POSITIONS)	6.8.10
间距(PITCH)	3.18mm(6Contacts) 2.54mm(8.10Contacts)
额定电流(CURRENT)	AC/DC 18A (6Contacts) AC/DC 24A (8Contacts) AC/DC 30A (10Contacts)
适用螺钉(APPLICABLE SCREW)	M4

Series 9069

这是为向设备内各单元、特别是向电路板供给电源而开发的压配连接器的端子块，几乎无焊接固定方式所常见的热影响。

The press-fit terminal block is developed for power supply to P.C.boards and other individual units mounted in the equipment. There is no thermal effect like as soldering. 9069

Series 6330
Series 8242

柔性插针
Compliant Post

系列名称(SERIES)	6330/8242
间距(PITCH)	2.54mm

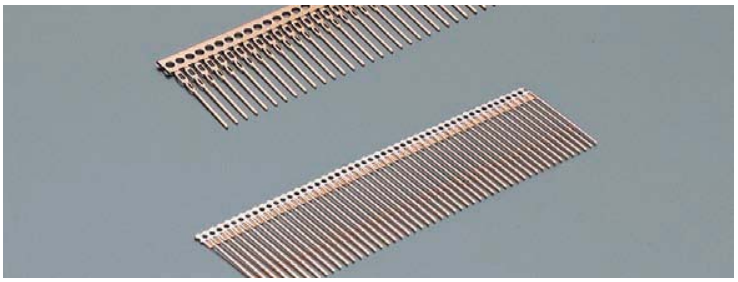

Series 6330、8242

6330系列有压配型、柔性插针，8242系列有同样的压配型和焊接型插针两种。

Series 6330 is a press-fit compliant post, and the Series 8242 consists of two types: the press-fit type and the soldering type Vari-post.

Coaxial Connectors 同轴连接器

Series 5367

系列名称(SERIES)	5367
极数(NO. OF POSITIONS)	5
间距(PITCH)	2.5mm
额定电流(CURRENT)	AC/DC 250mA CONTACT
额定电压(VOLTAGE)	AC/DC 250V CONTACT
耐压值(D.W. VOLTAGE)	250 Vrms/min
特性阻抗 (Characteristic Impedance)	50Ω
使用频率(Frequency Range)	DC～300MHz
插入损耗(Insertion Loss)	－0.3dB
VSWR(Voltage Standing Wave Ratio)	＜1.3

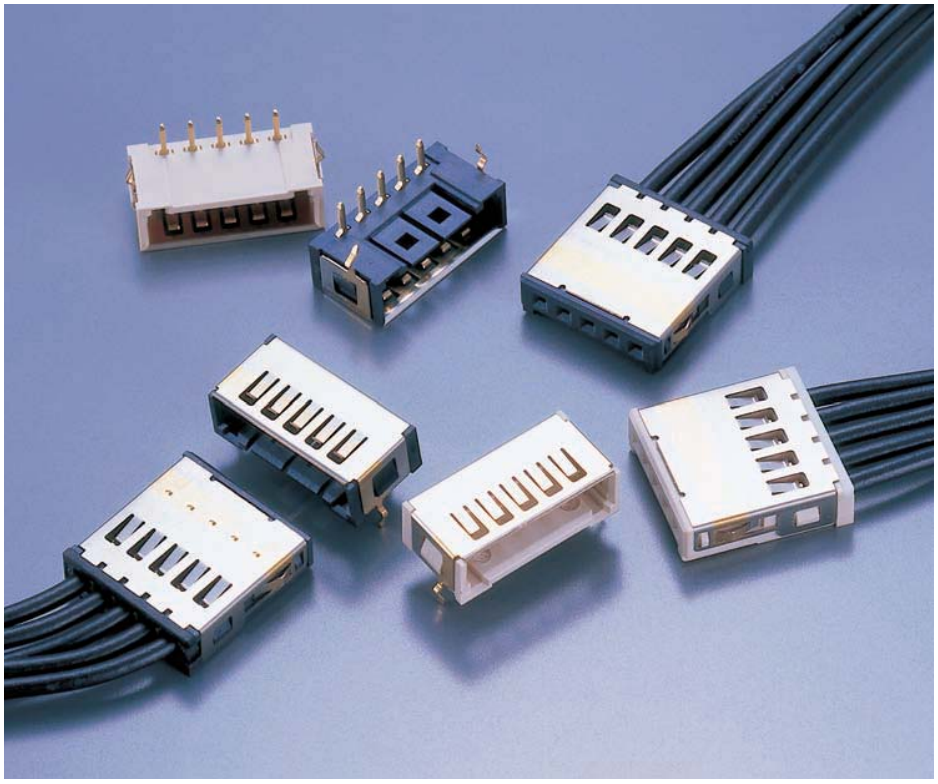

Series 5367

◆概要

5367系列是适用于同轴连接器的高频带（DC_300 MHz）的多联、同轴、5极、板对线连接器。小型、小空间设计，却可传送高频信号，同时采用了防止脱落的双重锁紧结构等，是小型而可靠性高的连接器。插头端为电路板型（直角型DIP型），插座端为线束型。

该连接器最适用于通信设备、传送设备、测量设备等设备内部的连接。

◆特点

(1) 这是小型5极、适宜细线同轴电缆所用的连接器。
(2) 可以进行高频传送。
(3) 为防止脱落，采用了掀盖式锁紧、外壳锁紧的双重锁紧机构，容易插入，不易拔出。
(4) 带有防止误嵌合功能。
(5) 具有使壳体间的连接牢固的5处独立弹簧结构。
(6) 插座提供线束品。
(7) 插头端进行了扭折加工，以防止DIP时的浮动。

◆Outline

Series 5367 is multi-positioned coaxial 5 positions board to wire connector designed to be applied to the high frequency domain of coaxial connector (DC-300MHz). Regardless of its small and space-saving design, it can transmit on high frequency. In addition, it is a small and highly reliable connector by adopting the dual locking structure to hold the wire firmly. Plug side is board type (Right Angle/Through Hole type) and receptacle side harness type.
It is the connector we recommend most for the use of internal connection of communication, transmission and measurement equipments.

◆Features

(1)Small, five positioned fine coaxial cable connector
(2)Able to transmit on high frequency
(3)Designed to have the dual locking structure like flip lock and housing lock in order to hold the wire firmly, which enabled the easy insertion and hard separation of wire
(4)Function to prevent the wrong mating
(5)Achieves firm connection of shells and designed to have the independent spring structures on five places
(6)Receptacle side offered with harness assembly
(7)Plug side to have kink in order to prevent the floating of Through Hole type

CONNECTORS GUIDE

INDEX

系列	类别	页码
5015	Mezzanine Card	33
5025	Memory Card	50
5027	Memory Card	51
5031	Interface-I / O	58
5036	Memory Card	54
5038	Memory Card	52
5042	Microleaf - 0.5mm	29
5046	Super Microleaf - 0.5mm	27
5047	Super Microleaf - 0.5mm	27
5061	Microleaf - 1.27mm	32
5062	FFC/FPC - 1.25mm	21
5069	Memory Card	51
5072	Microleaf - 1.27mm	32
5077	Microleaf - 1.0mm	31
5078	Microleaf - 1.0mm	31
5082	TIN Plated BtoB	34
5087	Super Microleaf - 0.5mm	27
5090	Power Supply	41
5121	Interface - I / O	59
5123	Interface - I / O	57
5124	Interface - I / O	58
5141	Interface - I / O	59
5338	Memory Card	53
5367	Coaxial Connector	64
5600	Microleaf - 0.8mm	30
5602	Super Microleaf - 0.4mm	26
5603	Super Microleaf - 0.5mm	28
5604	Super Microleaf - 0.5mm	27
5605	Super Microleaf - 0.4mm	25
5607	Microleaf - 0.5mm	29
5608	Microleaf - 0.8mm	30
5609	Microleaf - 0.8mm	30
5610	Memory Card	52
5611	Memory Card	52
5612	Memory Card	52
5620	Memory Card	52
5638	Memory Card	53
5645	Super Microleaf - 0.5mm	27
5738	Memory Card	54
5801	Super Microleaf - 0.4mm	23
5805	Super Microleaf - 0.4mm	24
6200	FFC / FPC - 1.0mm	16
6203	FFC / FPC - 1.25mm	21
6205	FFC / FPC - 1.25mm	21
6206	FFC / FPC - 0.8mm	15
6207	FFC / FPC - 1.25mm	20
6208	FFC / FPC - 1.0mm	18
6210	FFC / FPC - 0.5mm	12
6212	FFC / FPC - 0.5mm	12
6214	FFC / FPC - 0.5mm	13
6216	FFC / FPC - 1.25mm	20
6218	FFC / FPC - 0.8mm	15
6222	FFC / FPC - 0.5mm	12
6223	FFC / FPC - 0.5mm	12
6224	FFC / FPC - 1.0mm	16
6226	FFC / FPC - 1.0mm	18
6227	FFC / FPC - 1.0mm	16
6228	FFC / FPC - 1.0mm	17
6229	FFC / FPC - 1.0mm	19
6231	FFC / FPC - 1.0mm	19
6232	FFC / FPC - 1.0mm	17
6237	FFC / FPC - 1.0mm	16
6238	FFC / FPC - 0.5mm	09
6239	FFC / FPC - 0.5mm	11
6240	FFC / FPC - 0.5mm	11
6243	FFC / FPC - 0.3mm	06
6244	FFC / FPC - 0.5mm	13
6246	FFC / FPC - 0.2mm	02
6248	FFC / FPC - 1.0mm	19
6249	FFC / FPC - 0.5mm	09
6250	FFC / FPC - 0.5mm	08
6252	FFC / FPC - 0.5mm	08
6254	FFC / FPC - 0.5mm	10
6260	FFC / FPC - 0.5mm	12
6262	FFC / FPC - 0.5mm	12

系列	类别	页码
6266	FFC / FPC - 0.5mm	13
6267	FFC / FPC - 0.3mm	05
6268	FFC / FPC - 0.8mm	14
6269	FFC / FPC - 0.5mm	11
6270	FFC / FPC - 0.5mm	08
6272	FFC / FPC - 0.5mm	08
6274	FFC / FPC - 0.5mm	13
6277	FFC / FPC - 0.5mm	07
6278	FFC / FPC - 0.8mm	14
6281	FFC / FPC - 0.3mm	05
6283	FFC / FPC - 0.3mm	04
6284	FFC / FPC - 0.5mm	11
6285	FFC / FPC - 0.3mm	04
6286	FFC / FPC - 0.4mm	06
6292	FFC / FPC - 0.5mm	10
6295	FFC / FPC - 0.3mm	03
6296	FFC / FPC - 0.3mm	03
6298	FFC / FPC - 0.5mm	08
6299	FFC / FPC - 0.5mm	07
6330	Press - Fit Pin	63
6401	SO - DIMM SOCKET	55
6402	SO - DIMM SOCKET	55
6403	SO - DIMM SOCKET	55
6405	Mini - PCI	57
6406	DDR SOCKET	56
6407	Mini-PCI Express Card Connector	56
8000	Miniature Wire to Board	49
8005	Miniature Wire to Board	49
8014	Rack & Panel	43
8015	Miniature Wire to Board	50
8016	Rack&Panel	42
8017	Rack&Panel	42
8024	Rack&Panel	43
8026	Rack&Panel	42
8027	Rack&Panel	42
8029	Rack&Panel	43
8040	Miniature Wire to Board	48
8069	Shield Lock	62
8071	Hard Metric	37
8072	Hard Metric	38
8073	Hard Metric	38
8074	Hard Metric	39
8075	Hard Metric	39
8077	Hard Metric	39
8083	Wire to Wire / Board (TIN Plated)	45
8223	Rack & Panel	43
8242	Press - Fit Pin	63
8261	Switching	35
8263	Wire to Wire / Board (Tin plated)	45
8263（中継用）	Wire to Wire / Board (Tin plated)	46
8272	DIN	36
8283	Wire to Wire / Board (Tin plated)	46
8283（IDC）	Wire to Wire / Board (Tin plated)	46
8283（BtoB）	Board to Board (Tin plated)	34
8331	DIN	36
8332	DIN	36
8345	DIN	36
8370	FFC/FPC - 1.25mm	20
8377	High Density	40
8378	High Density	40
8387	Switching	35
8455	DIN	37
9021	Wire to Wire / Board (Gold plated)	44
9067	Switching	35
9069	Press - Fit Pin	63
9072	Post & Box	33
9073	Wire to Wire / Board (Tin plated)	47
9073（IDC）	Wire to Wire / Board (Tin plated)	47
9090	Power Supply	41
9110	Power Supply	41
9198	MicroPhone Holder	61
9203	Hard Metric	39
9215	Automotive	60
9515	Automotive	60

京瓷爱克股份有限公司　KYOCERA ELCO Corporation

总公司

横浜市都筑区加贺原2-1-1〒224-8512

国内经营部
(Domestic Sales Department)　TEL.045-943-2900　FAX.045-943-2910
TEL.045-943-2903

海外经营部
(Oversea Sales Department)　TEL.045-943-2907　FAX.045-943-2910

■KYOCERA ELCO Corporation（Japan）
12-1-1　Kagahara, Tsuzuki-ku, Yokohama, 224-8512, Japan
TEL.81-45-943-2907　FAX.81-45-943-2910

■KYOCERA ELCO Korea Sales Co., Ltd.
4th Floor, Gi-Im Building, 399, Sindorim-Dong, Guro-Gu, Seoul, Korea
TEL.82-2-868-0147　FAX.82-2-868-6600

■KYOCERA ELCO Singapore Pte. Ltd.
164 Kallang Way, #04-01/15, Kolam Ayer Industrial Park Singapore 349248
TEL.65-6744-8398　FAX.65-6744-1783

■KYOCERA ELCO Hong Kong Ltd.
香港九龙尖沙咀东部么地道七十五号 南洋中心第一座八〇一至二室
Room No.801, 802, Tower 1, South Seas Centre, 75 Mody Road, Tsimsha East, Kowloon, Hong Kong
TEL.852-2342-4395　FAX.852-2368-4068

■KYOCERA Electronic Devices LLC（US Head office）
4350 international Pkwy, SuiteC, Atlanta, GA 30354 USA.
TEL.1-404-477-2462　FAX.1-404-477-2466

■KYOCERA Electronic Devices（Sales office: Chicago office）
5105 Tollview Drive, Suite 130, Rolling Meadows, IL 60008, USA.
TEL.1-847-392-1077　FAX.1-847-392-1179

■KYOCERA Electronic Devices（Sales office: Santa Clara office）
2340-A Walsh Avenue, Santa Clara, CA 95051, USA.
TEL.1-408-988-4900　FAX.1-408-988-4901

■AVX Ltd.
Admiralhouse Harlington Way, Fleet Hampshire GU13 8BB, England
TEL.44-1252-770000　FAX.44-1252-770001

■AVX S.A.
Zone D'activites De Courtaboeuf Boite Postale 213 Miniparc-6AV. des Andes 91941 Les Ulis Cecex, France
TEL.33-169-184600　FAX.33-169-287387

■AVX GmbH
Benjamin Fox Strasse 1,D-57518 Betzdorh, Germany
TEL.49-2741-2990　FAX.49-2741-299133

■AVX S.R.L.
Via Galilei, 2 20091 Bresso, Milan, Italy
TEL.39-2-665-00116　FAX.39-2-614-2576

■KYOCERA Electronic Devices Hong Kong Ltd.
香港九龙湾常悦道9号企业广场第1期第3座18楼1801室
Unit 1801, 18/F., Tower III, Enterprises Square No.9, Sheung Yuet Road, Kowloon Bay, Kowloon. Hong Kong
TEL.852-2305-1080　FAX.852-2305-1405

■京瓷电子元件香港有限公司（深圳代表处）
KYOCERA Electronic Devices Hong Kong Ltd. (Shenzhen Rep. Office)
中国深圳福田区益田路与福华三路交界东北 深圳国际商会中心8楼13及15单元　邮编518048
Unit 13&15, 8/F., International Chmber Of Commerce Tower, Northeast Crossing of Yitian Road and Fuhua 3rd Road,
Futian District, Shenzhen 518048, China
TEL.0755-3398-9600　FAX.0755-3398-9601

■KYOCERA Electronic Devices Singapore Pte Ltd.
3 碧山坊，#05-07 CPF碧山大厦　邮区579838
3 Bishan Place #05-07 CPF Bishan Building Singapore 579838
TEL.65-6351-8392　FAX.65-6255-5092

■京瓷电子元件贸易（上海）有限公司
KYOCERA Electronic Devices Trading (Shanghai) Company, Ltd.
上海市华山路2号中华企业大厦1306-1310室，200040
1306-1310, China Enterprise Tower Complex, 2 Hua Shan Road, Shanghai, China 200040
TEL.0086-21-6217-1201　FAX.0086-21-6217-1002

■京瓷电子元件股份有限公司
KYOCERA Electronic Devices Taiwan Ltd.
台北县220板桥市民生路一段33号4楼（正隆广场）
4th Floor, No.33, Section 1, Mingsheng Road, Banciao City, Taipei, Taiwan
TEL.886-2-2950-0268　FAX.886-2-2950-0520

■京瓷（天津）商贸有限公司上海分公司
KYOCERA（Tianjin）Sales & Trading Corp.（Shanghai Branch）
上海市浦东新区世纪大道211号上海信息大楼十一层　邮编200120
Information Tower 11th Floor, 211 Century Avenue, Pudong New Area, Shanghai, P.R.China
TEL.0086-21-58775366　FAX.0086-21-58885096

●本产品目录的内容可能不经预告而加以修改，请予以谅解。
Specification in the catalogue might be changed without notice.
●使用本产品目录时，请在确认交货规格书的基础上，正确使用。
Please verify your design with our drawing and specification.

此说明书使用再生纸制成。

The catalogue is printed on recycled paper for nature.

JQA-0704
ISO-9001

Printed in Japan 2007・4・5K
网址 http://www.kyocera-elco.com/

AVX
A KYOCERA GROUP COMPANY

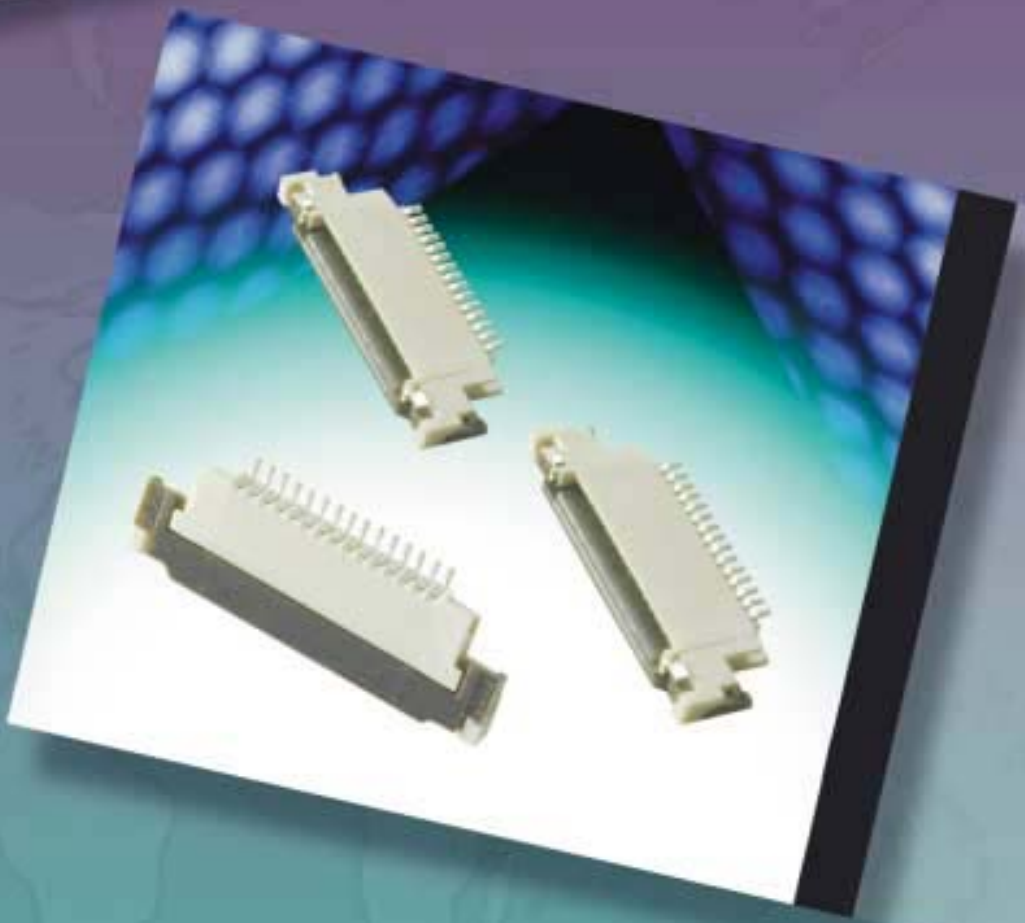

ELCO
FFC/FPC Connectors

FFC/FPC Connectors

Contents

Product Selection Guide 1

History of FFC/FPC 2

0.50mm Pitch Product Selector Guide 9
- Series 6249 11
- Series 6250/6270 13
- Series 6252/6272 15
- Series 6239/6269 17
- Series 6240 19
- Series 6210/6260 21
- Series 6212/6262 23
- Series 6254 25
- Series 6222 27
- Series 6223 29
- Series 6214 31
- Series 6274 33
- Series 6244 35
- Series 6266 37

0.80mm Pitch Product Selector Guide 39
- Series 6218 40
- Series 6206 41

1.00mm Pitch Product Selector Guide 43
- Series 6232 45
- Series 6200 53
- Series 6224 57
- Series 6208 59
- Series 6229 62
- Series 6248 64
- Series 6226 65
- Series 6227 67
- Series 6228 69

1.25mm Pitch Product Selector Guide 70
- Series 8370 71
- Series 6216 73
- Series 6205 78
- Series 6207 79
- Series 6203 81
- Series 5062 82

ELCO

FFC/FPC Connectors

Product Selection Guide

	SMT				DIP (Through Hole)					
	Vertical Type		Right Angle Type		Vertical Type		Right Angle Type		Bottom Entry	Direct
Series	ZIF	NON-ZIF (LIF)	ZIF	NON-ZIF (LIF)	ZIF	NON-ZIF (LIF)	ZIF	NON-ZIF (LIF)	NON-ZIF (LIF)	–
0.30mm pitch			6255							
0.50mm pitch	6214 6274	6244 6266	6249 6250 6270 6252 6272 6239 6269 6240 6210 6260 6212 6262	6222 6223 6254						
0.80mm pitch		6218		6206						
1.00mm pitch	6208 6229 6248	6226 6231 6232	6200 6224 6237	6227 6232	6229 6208	6232	6200	6232 6228		
1.25mm pitch		6207		6207	6205	8370 6216		8370 6216	6203	5062

ELCO

History of FFC/FPC

In the 1970's, Flat Flexible Cables (FFC) were adopted as a standard interface to jumper between printed circuit boards. While these cables provided design engineers significant packaging flexibility, the termination technology was limited to only two methods:

- Direct Solder: permanent connection for low cost applications.
- Crimped Contacts: separable connection for high end plugability.

Seeing the need for a cost effective termination solution, Elco developed the first card edge style connector in 1986 which would mate directly to the FFC. This Low Insertion Force (LIF) type connector provided simple and reliable mating and unmating of the cable to the printed circuit board. Elco's 8370 Series quickly became an industry standard for cost effective FFC terminations. In 1987, Elco introduced the first Zero Insertion Force (ZIF) connector, Series 6200, which provided increased mating and unmating (durability) cycles.

Since that time, Elco has continued to lead the industry with state-of-the-art products. Today we offer over 45 different product series for flex circuits ranging between 1.25mm and 0.30mm pitch.

FFC/FPC COMPOSITION

FFC

Flat Flexible Cable (FFC) is made up of thin rectangular copper conductors laminated between two layers of polyester insulation. These copper conductors are left uncovered on each end and then tin plated to make electrical contact with the connector. A stiffener is bonded to the cable end which provides mechanical stability for the exposed copper conductors during mating and unmating. This type of cable is used when a straight one-to-one connection is required.

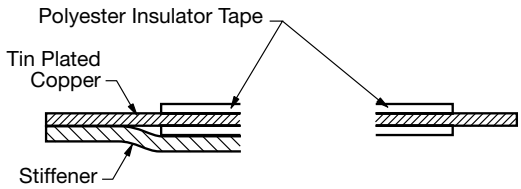

FPC

Flexible Printed Circuits (FPC) are similar in construction to the FFC except that copper film is chemically etched to produce a specific pattern. While these circuits are custom made for each application, various shapes and geometrics can solve the toughest packaging problems.

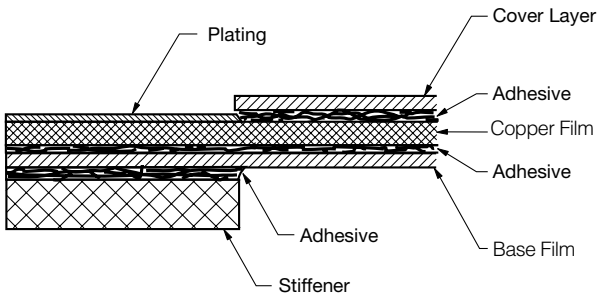

CARBON PASTE

Screen printing with conductive ink is the newest form of FPC (called membrane) being produced today. In this application, carbon/silver (C/Ag) paste replaces the traditional copper conductor. While very soft and easily damaged, these membrane circuits are cost effective to produce and are lightweight.

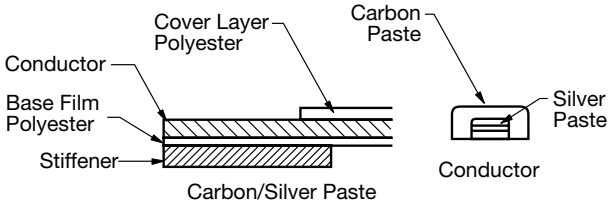

History of FFC/FPC

CONTACT DESIGN

In keeping pace with FFC/FPC Technology, Elco has developed two different contact geometrics to guarantee reliable gas tight connections. The standard contact, which is available in all series, was designed to mate with all copper based FFC/FPC. This initial contact system proved to be too damaging to the softer carbon silver paste. In 1985, Elco introduced the first contact specifically designed for this application. Incorporating a radiused point, this new contact provides the reliability needed to meet today's mechanical and environmental environments.

STANDARD CONDUCTOR

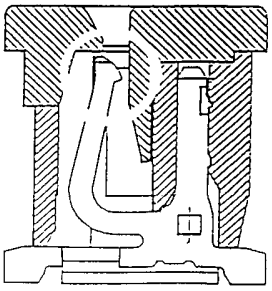

C/Ag CONDUCTOR

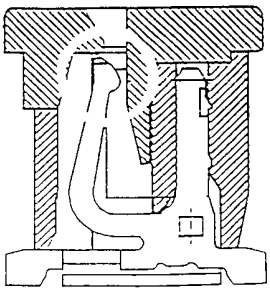

CONNECTOR TERMINOLOGY

ZIF (Zero Insertion Force)

This connector style allows the highest possible number of mating cycles (30) for FFC/FPC. This connector incorporates a mechanical slider mechanism which snaps down over the cable after it is inserted into the insulator body.

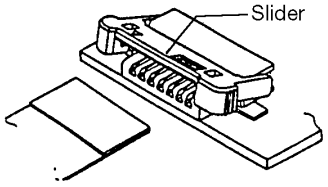

ZIF

LIF (Low Insertion Force) / NON ZIF

This style is the most cost effective FFC/FPC connector while still providing reliability. The prepared cable is gently pressed into the insulator slot. There are no moving parts, however, maximum durability is 10 mating cycles.

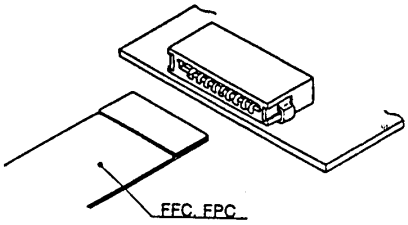

LIF

FUNCTIONAL COMPARISON OF ZIF AND LIF

	Durability	Reliability	Cost	Size
ZIF	Better	Better	Good	Good
LIF	Good	Good	Better	Better

PCB TERMINATION STYLE

THROUGH HOLE

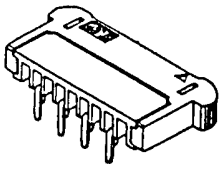

Right Angle

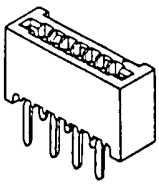

Straight

SURFACE MOUNT

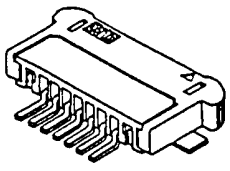

Right Angle

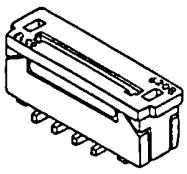

Straight

ELCO

History of FFC/FPC

PLACEMENT FEATURES

These help to position the connector on the printed circuit board and provide mechanical support, especially in SMT applications.

KINKED LEGS

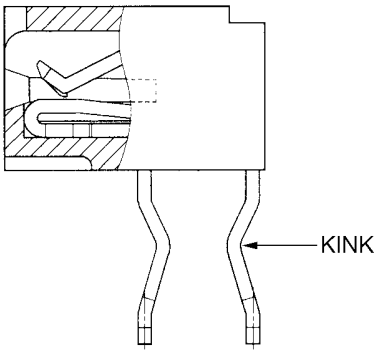

METAL TAB / STRAIN RELIEF

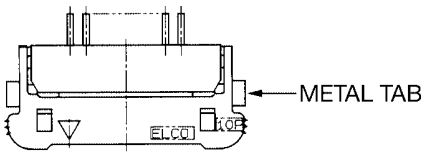

MOUNTING BOSS

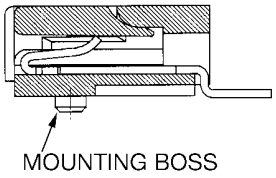

CONTACT ORIENTATION

Dual Sided Contacts (LIF Only): Cable orientation is not as critical.

Single Sided Contacts (Includes Top and Bottom): This style requires the FFC/FPC to be inserted into the insulator where by the exposed copper matches with the contact.

Choosing the correct connector eliminates flipping the FFC/FPC 180°. EXAMPLES:

		Bottom Contact	Top Contact
1.00mm	ZIF	6200	6224
0.50mm	ZIF	6210	6212
0.50mm	LIF	6222	6223

DUAL SIDED

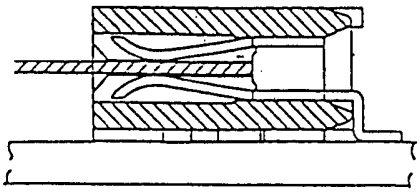

SINGLE SIDED-BOTTOM CONTACT

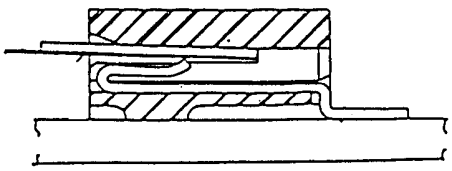

FUNCTIONAL COMPARISON OF DUAL AND SINGLE SIDED LIF CONTACTS

	Durability	Reliability	Cost	Orientation
Dual	Good	Better	Good	None
Single	Better	Good	Better	Yes

TYPICAL SINGLE SIDED CONTACT APPLICATION

6210 Series
Bottom Contact Type

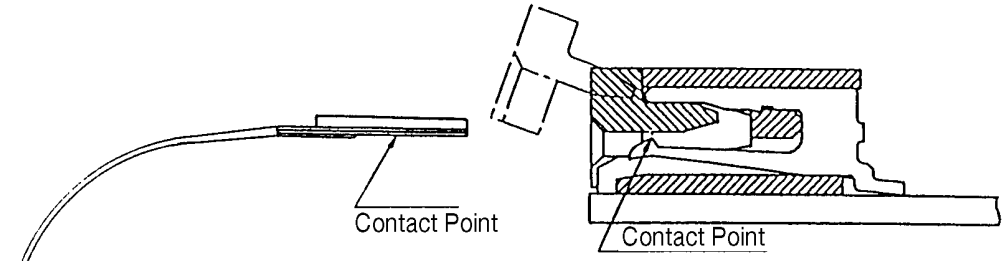

6212 Series
Top Contact Type

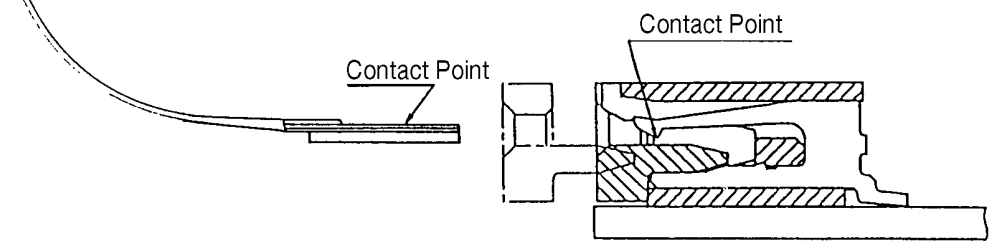

NEW FEATURES TO LOOK FOR:

- Standard 30-50 position 0.50mm pitch ZIF connectors (Series 6240)
- 0.90mm insulator height – lowest in the industry (Series 6250 and 6252)
- New cost effective 0.50mm LIF connectors (Series 6222 and 6223)
- Enhanced line of 1.00mm LIF connectors (Series 6226, 6227 and 6232)
- Integral pick and place flange (eliminates Kapton tape) for straight SMT application (Series 6232)
- New time saving flip-top ZIF (Series 6239 and 6240)
  The flip-top/one-touch lock saves time in inserting or withdrawing the cable. Additionally, it saves valuable PCB space as the lock does not extend outside the footprint profile of the connector when opened.

0.50mm Pitch

Product Selector Guide

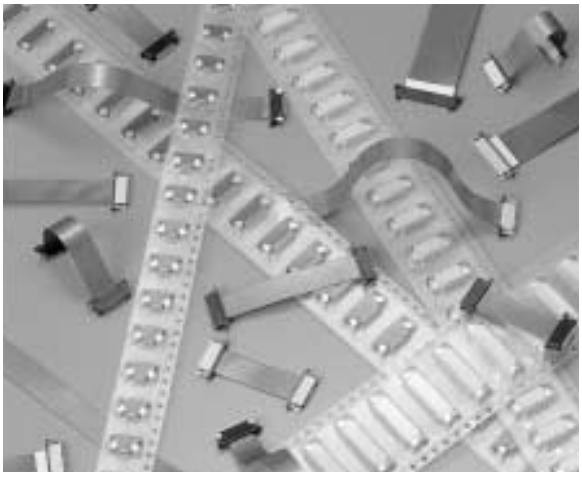

We also can supply C/Ag (Carbon Silver) type connectors.

ST (Vertical)	**ZIF**	**6214 6274**
	NON-ZIF (LIF)	**6244 6266**
RA Right Angle	**ZIF**	**6249 6250 6270 6252 6272 6239 6269 6240 6210 6260 6212 6262**
	NON-ZIF (LIF)	**6222 6223 6254**

millimeters (inches)

Series	**6249**	**6250**	**6270**	**6252**	**6272**	**6239**	**6269**	**6240**	**6210**	**6260**
Type	**ZIF RA SMT** One-Touch Lock	**ZIF RA SMT** Slide-Lock	**ZIF RA SMT** Slide-Lock	**ZIF RA SMT** Slide-Lock	**ZIF RA SMT** Slide-Lock	**ZIF RA SMT** One-Touch Lock	**ZIF RA SMT** One-Touch Lock C/Ag type	**ZIF RA SMT** One-Touch Lock	**ZIF RA SMT** Slide-Lock	**ZIF RA SMT** Slide-Lock C/Ag type
Contact	Bottom	Bottom	Bottom	Top	Top	Bottom	Bottom	Bottom	Bottom	Bottom
Profile Height in mm	1.20 (0.047)	0.90 (0.035)	0.90 (0.035)	0.90 (0.035)	0.90 (0.035)	1.50 (0.059)	1.50 (0.059)	2.00 (0.079)	2.00 (0.079)	2.00 (0.079)
Number of Contacts	5-30	5-30	5-30	5-32	5-32	5-30	5-30	30-50	5-30, 33, 34,35,36,40	5-30
Current Rating	0.4A Max.	0.4A Max.	0.4A Max.	0.4A Max.	0.4A Max.	0.4A Max.	5mA Max.	0.4A Max.	0.4A Max.	5mA Max.
Voltage Rating	50V Max.	50V Max.	50V Max.	50V Max.	50V Max.	50V Max.	15V Max.	50V Max.	50V Max.	15V Max.
Dielectric Withstanding Voltage	200Vrms	200Vrms	250Vrms	200Vrms	250Vrms	200Vrms	200Vrms	200Vrms	200Vrms	200Vrms
Contact Material	L Phosphor bronze Tin-Plated	L Phosphor bronze Tin-Plated	Phosphor bronze Gold-Plated	Phosphor bronze Tin-Plated	Phosphor bronze Gold-Plated	L Phosphor bronze Tin-Plated	L Phosphor bronze Tin-Plated	L Phosphor bronze Tin-Plated	L Phosphor bronze Tin-Plated	L Phosphor bronze Tin-Plated
Insulator Material	**Heat resistance plastic**									
Operating Temperature	-20ºC~+85ºC	-20ºC~+70ºC	-40ºC~+85ºC	-20ºC~+85ºC	-40ºC~+85ºC	-40ºC~+85ºC	-10ºC~+60ºC	-40ºC~+85ºC	-40ºC~+85ºC	-10ºC~+60ºC
FFC/FPC Thickness	0.2±0.03 (0.008±0.001)	0.2±0.03 (0.008±0.001)	0.2±0.03 (0.008±0.001)	0.2±0.03 (0.008±0.001)	0.2±0.03 (0.008±0.001)	0.3±0.05 (0.012±0.002)	0.3±0.05 (0.012±0.002)	0.3±0.05 (0.012±0.002)	0.3±0.05 (0.012±0.002)	0.3±0.05 (0.012±0.002)
Page	11-12	13-14	13-14	15-16	15-16	17-18	17-18	19-20	21-22	21-22

RA = Right Angle

0.50mm Pitch

Product Selector Guide

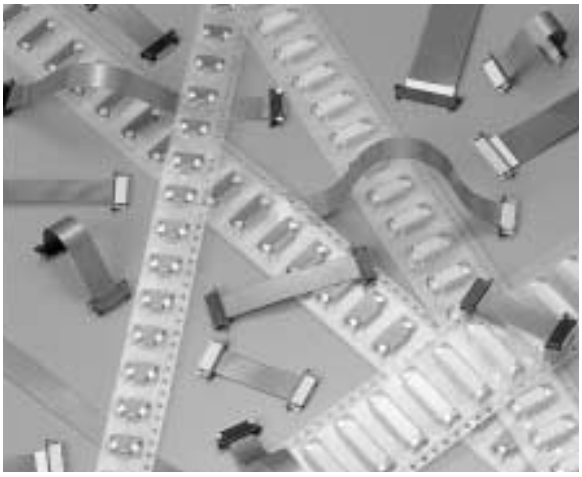

We also can supply C/Ag (Carbon Silver) type connectors.

ST (Vertical)	ZIF	6214 6274
	NON-ZIF (LIF)	6244 6266
RA Right Angle	ZIF	6249 6250 6270 6252 6272 6239 6269 6240 6210 6260 6212 6262
	NON-ZIF (LIF)	6222 6223 6254

millimeters (inches)

Series	6212	6262	6254	6222	6223	6214	6274	6244	6266	
Type	**ZIF RA SMT** Slide-Lock	**ZIF RA SMT** Slide-Lock C/Ag type	**NON-ZIF (LIF) RA SMT**	**NON-ZIF (LIF) RA SMT**	**NON-ZIF (LIF) RA SMT**	**ZIF ST SMT** Slide-Lock	**ZIF ST SMT** Slide-Lock	**NON-ZIF (LIF) ST SMT**	**NON-ZIF (LIF) ST SMT**	
Contact	Top	Top	Dual	Bottom	Top	Single	Single	Single	Dual	
Profile Height in mm	2.00 (0.079)	2.00 (0.079)	1.20 (0.047)	1.95 (0.077)	1.95 (0.077)	4.10 (0.161)	4.40 (0.173)	4.10 (0.61)	3.50 (0.138)	
Number of Contacts	5-30,33,34, 35,36,38,40	5-30	5-20	5-30	5-30	6-30	31-50	16,18,21, 23,24	5,10	
Current Rating	0.4A Max.	0.4A Max.	0.4A Max.	0.4A Max.	0.4A Max.	0.4A Max.	0.4A Max.	0.4A Max.	0.4A Max.	
Voltage Rating	50V Max.	50V Max.	50V Max.	50V Max.	50V Max.	50V Max.	50V Max.	50V Max.	50V Max.	
Dielectric Withstanding Voltage	200Vrms	200Vrms	200Vrms	200Vrms	200Vrms	200Vrms	200Vrms	200Vrms	200Vrms	
Contact Material	Phosphor bronze Tin-Plated	Phosphor bronze Tin-Plated	Phosphor bronze Tin-Plated	Phosphor bronze Tin-Plated	Phosphor bronze Tin-Plated	Phosphor bronze Tin-Plated	Phosphor bronze Tin-Plated	Phosphor bronze Tin-Plated	Phosphor bronze Tin-Plated	
Insulator Material	**Heat resistance plastic**									
Operating Temperature	-40ºC~+85ºC	-10ºC~+60ºC	-40ºC~+85ºC	-40ºC~+85ºC	-40ºC~+85ºC	-40ºC~+85ºC	-25ºC~+85ºC	-40ºC~+85ºC	-20ºC~+85ºC	
FFC/FPC Thickness	0.3±0.05 (0.012±0.002)	0.3±0.05 (0.012±0.002)	0.3±0.03 (0.012±0.001)	0.3±0.05 (0.012±0.002)	0.3±0.05 (0.012±0.002)	0.3±0.05 (0.012±0.002)	0.3±0.05 (0.012±0.002)	0.3±0.05 (0.012±0.002)	0.3±0.05 (0.012±0.002)	
Page	23 - 24	23 - 24	25 - 26	27 - 28	29 - 30	31 - 32	33 - 34	35 - 36	37 - 38	

RA = Right Angle ST = Straight

0.50mm Pitch

Series 6249 – Right Angle SMT One-Touch Lock
1.20mm Profile Height

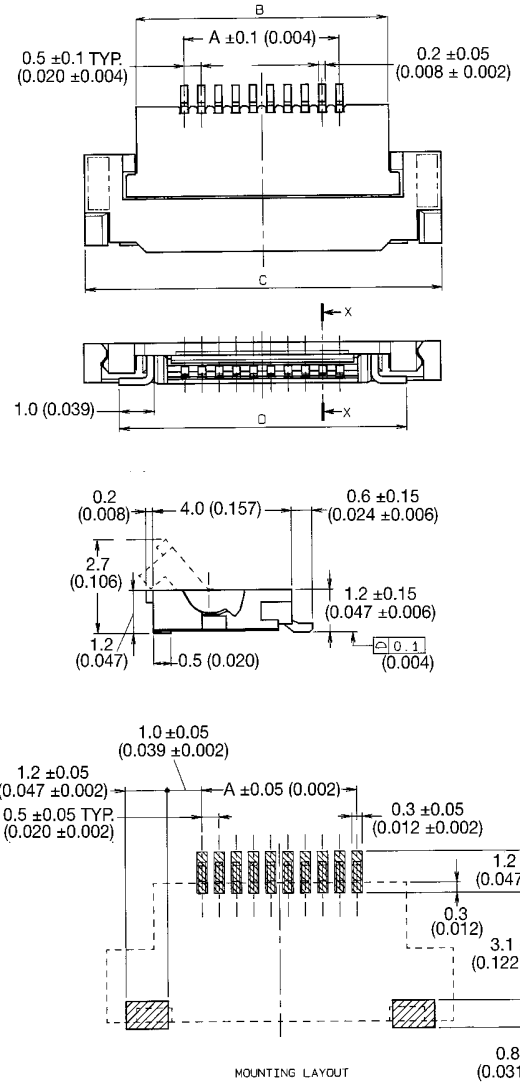

No. of Contacts	Dimension			
	A	B	C	D
05	2.0 (0.079)	4.8 (0.189)	7.8 (0.307)	5.8 (0.228)
06	2.5 (0.098)	5.3 (0.209)	8.3 (0.327)	6.3 (0.248)
07	3.0 (0.118)	5.8 (0.228)	8.8 (0.346)	6.8 (0.268)
08	3.5 (0.138)	6.3 (0.248)	9.3 (0.366)	7.3 (0.287)
09	4.0 (0.157)	6.8 (0.268)	9.8 (0.386)	7.8 (0.307)
10	4.5 (0.177)	7.3 (0.287)	10.3 (0.406)	8.3 (0.327)
11	5.0 (0.197)	7.8 (0.307)	10.8 (0.425)	8.8 (0.346)
12	5.5 (0.217)	8.3 (0.327)	11.3 (0.445)	9.3 (0.366)
13	6.0 (0.236)	8.8 (0.346)	11.8 (0.465)	9.8 (0.386)
14	6.5 (0.256)	9.3 (0.366)	12.3 (0.484)	10.3 (0.406)
15	7.0 (0.276)	9.8 (0.386)	12.8 (0.504)	10.8 (0.425)
16	7.5 (0.295)	10.3 (0.406)	13.3 (0.524)	11.3 (0.445)
17	8.0 (0.315)	10.8 (0.425)	13.8 (0.543)	11.8 (0.465)
18	8.5 (0.335)	11.3 (0.445)	14.3 (0.563)	12.3 (0.484)
19	9.0 (0.354)	11.8 (0.465)	14.8 (0.583)	12.8 (0.504)
20	9.5 (0.374)	12.3 (0.484)	15.3 (0.602)	13.3 (0.524)
21	10.0 (0.394)	12.8 (0.504)	15.8 (0.622)	13.8 (0.543)
22	10.5 (0.413)	13.3 (0.524)	16.3 (0.642)	14.3 (0.563)
23	11.0 (0.433)	13.8 (0.543)	16.8 (0.661)	14.8 (0.583)
24	11.5 (0.453)	14.3 (0.563)	17.3 (0.681)	15.3 (0.602)
25	12.0 (0.472)	14.8 (0.583)	17.8 (0.701)	15.8 (0.622)
26	12.5 (0.492)	15.3 (0.602)	18.3 (0.720)	16.3 (0.642)
27	13.0 (0.512)	15.8 (0.622)	18.8 (0.740)	16.8 (0.661)
28	13.5 (0.531)	16.3 (0.642)	19.3 (0.760)	17.3 (0.681)
29	14.0 (0.551)	16.8 (0.661)	19.8 (0.780)	17.8 (0.701)
30	14.5 (0.571)	17.3 (0.681)	20.3 (0.799)	18.3 (0.720)

Specifications

- Number of Contacts – 5-30
- 2000 Connectors per Tape & Reel
- Voltage – 50V
- Current Rating – 0.4 amp max.
- Dielectric Withstanding Voltage – 200V RMS min.
- Operating Temperature – (-20°C - +85°C)
- Contact Material – phosphor bronze (tin-lead plated)
- Insulator Material – LCP
- Slider Material – PPS, natural color
- FFC/FPC Thickness – 0.2 ±0.03mm (0.008 ±0.001")
- Profile Height – 1.20mm

0.2mm - FPC

	FPC	
	1	2
M	0.5±0.12	0.5±0.1
P	0.5±0.12	0.5±0.05
A	A±0.03	B±0.05
W	W±0.07	W±0.07
Wp	$0.35^{+0.04}_{-0.03}$	0.35+0.05

Applicable FPC

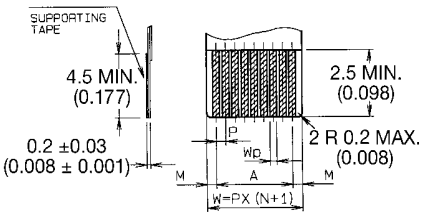

0.17mm - FPC

	FPC	
	1	2
M	0.5±0.12	0.5±0.1
P	0.5±0.02	0.5±0.05
A	A±0.03	B±0.05
W	W±0.07	W±0.07
Wp	$0.35^{+0.04}_{-0.03}$	0.35+0.05

Applicable FPC

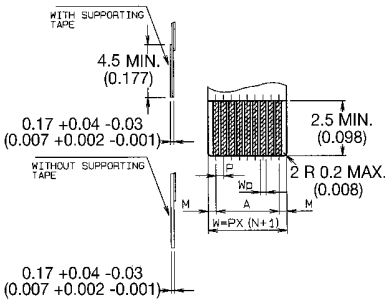

HOW TO ORDER

04 **6249** **0XX** **00X** **800**

Number of Contacts

Variation Code
0 = 0.2mm FPC
1 = 0.17mm FPC

2000 Connectors per Tape and Reel.

0.50mm Pitch

Series 6249 - Tape and Reel Package

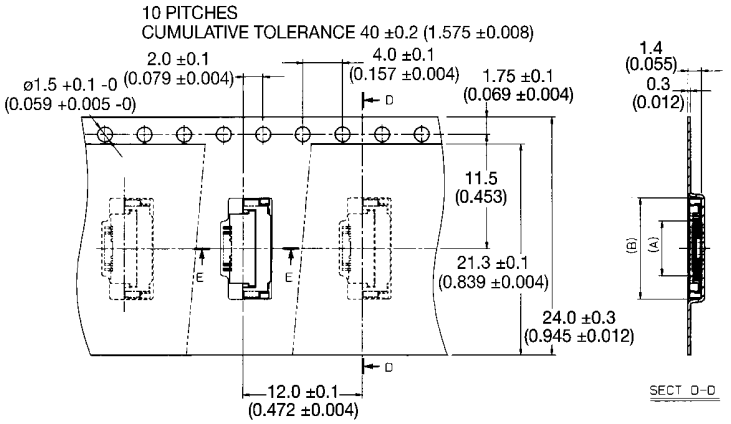

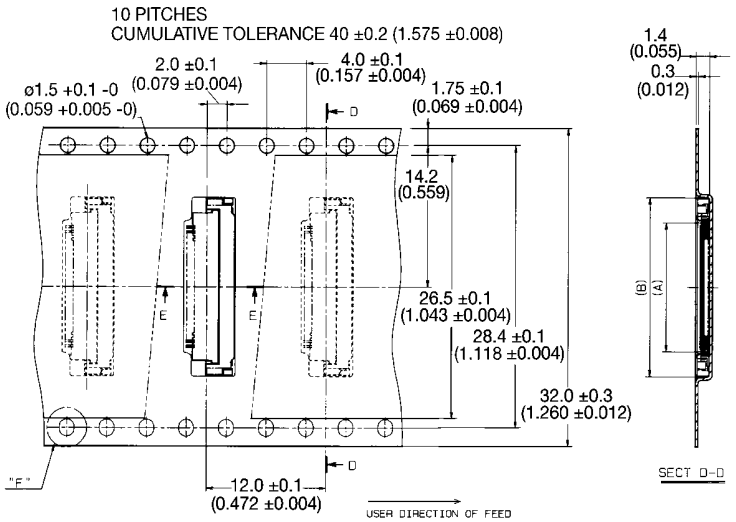

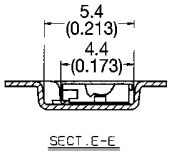

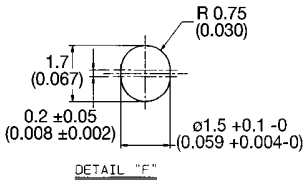

No. of Contacts	Dimension	
	A	B
05	3.0 (0.118)	8.0 (0.315)
06	3.5 (0.138)	8.5 (0.335)
07	4.0 (0.157)	9.0 (0.354)
08	4.5 (0.177)	9.5 (0.374)
09	5.0 (0.197)	10.0 (0.394)
10	5.5 (0.217)	10.5 (0.413)
11	6.0 (0.236)	11.0 (0.433)
12	6.5 (0.256)	11.5 (0.453)
13	7.0 (0.276)	12.0 (0.472)
14	7.5 (0.295)	12.5 (0.492)
15	8.0 (0.315)	13.0 (0.512)
16	8.5 (0.335)	13.5 (0.531)
17	9.0 (0.354)	14.0 (0.551)
18	9.5 (0.374)	14.5 (0.571)
19	10.0 (0.394)	15.0 (0.591)

No. of Contacts	Dimension	
	A	B
20	10.5 (0.413)	15.5 (0.610)
21	11.0 (0.433)	16.0 (0.630)
22	11.5 (0.453)	16.5 (0.650)
23	12.0 (0.472)	17.0 (0.669)
24	12.5 (0.492)	17.5 (0.689)
25	13.0 (0.512)	18.0 (0.709)
26	13.5 (0.531)	18.5 (0.728)
27	14.0 (0.551)	19.0 (0.748)
28	14.5 (0.571)	19.5 (0.768)
29	15.0 (0.591)	20.0 (0.787)
30	15.5 (0.610)	20.5 (0.807)

HOW TO ORDER

04	6249	0XX	00X	800
		Number of Contacts	Variation Code 0 = 0.2mm FPC 1 = 0.17mm FPC	

2000 Connectors per Tape and Reel.

0.50mm Pitch

Series 6250/6270 - ZIF Right Angle SMT (Bottom Contact Type) 0.90mm Profile Height

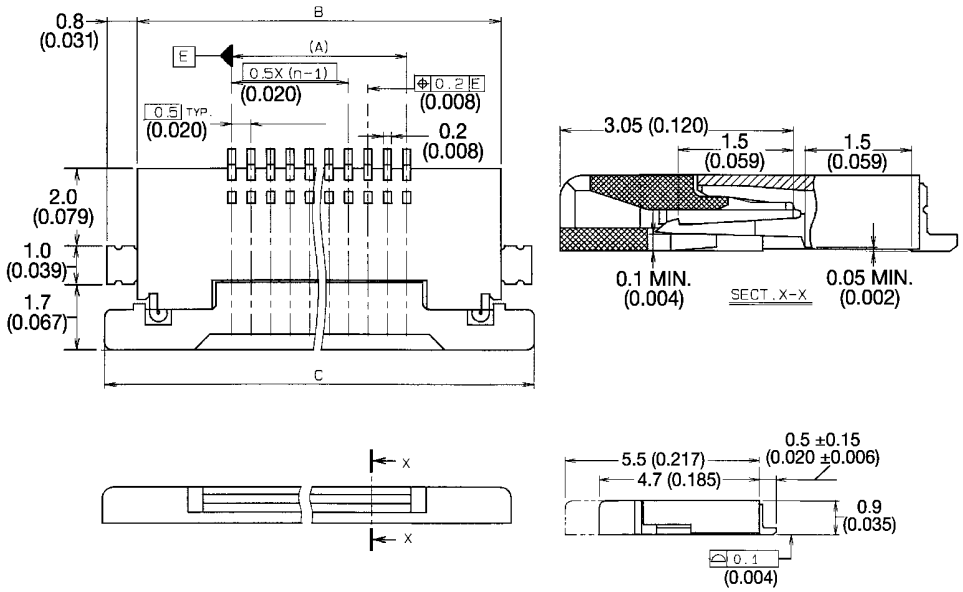

Specifications

- Number of Contacts – 5-30
- 2000 Connectors per Tape & Reel
- Voltage – 50V
- Current Rating – 0.4 amp max.
- Dielectric Withstanding Voltage – 200V RMS min.
- Operating Temperature – (-20°C - +70°C)
- Contact Material – phosphor bronze (tin-lead plated)
- Insulator Material – UL 94 V-O plastic
- Slider Material – plastic (UL 94 V-O)
- FFC/FPC Thickness – 0.2 ±0.03mm (0.008 ±0.001")
- Profile Height – 0.90mm
- Contact sales office for other available pin counts

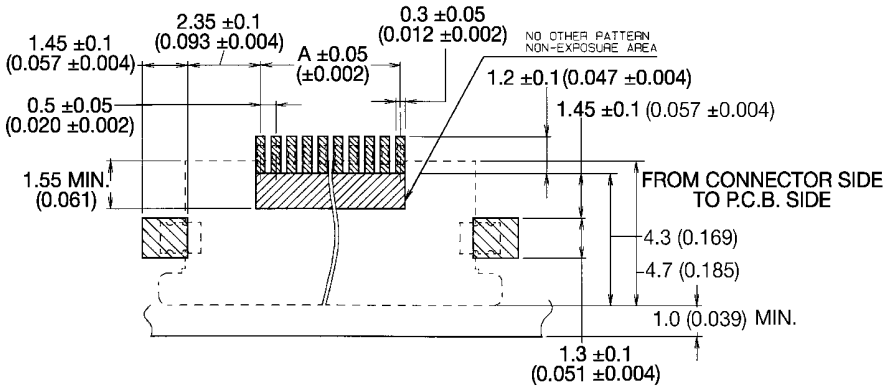

MOUNTING LAYOUT (CONN. MOUNTING SIDE)

No. of Contacts	Dimension		
	A	B	C
05	2.0 (0.079)	6.9 (0.272)	8.6 (0.339)
08	3.5 (0.138)	8.4 (0.331)	10.1 (0.398)
09	4.0 (0.157)	8.9 (0.350)	10.6 (0.417)
13	6.0 (0.236)	10.9 (0.429)	12.6 (0.496)
15	7.0 (0.276)	11.9 (0.469)	13.6 (0.535)
18	8.5 (0.335)	13.4 (0.528)	15.1 (0.594)
20	9.5 (0.374)	14.4 (0.567)	16.1 (0.634)

	FPC	
	1	2
M	0.5±0.12	0.5±0.1
P	0.5±0.02	0.5±0.05
A	A±0.03	A±0.05
W	W±0.07	W±0.07
Wp	$0.35^{+0.04}_{-0.03}$	0.35+0.05

Applicable FPC

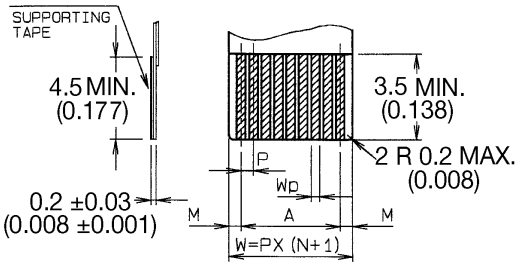

HOW TO ORDER

04	62XX	0XX	000	800
	Series Number 6250 6270	**Number of Contacts**		**Finish Code** 800 = Series 6250 – (Tln-Plated) 883 = Series 6270 – (Au=0.1mm)

2000 Connectors per Tape and Reel.

0.50mm Pitch

Series 6250/6270 - Tape and Reel Package

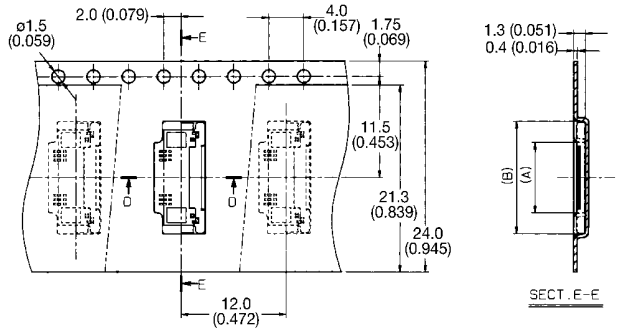

No. of Contacts	Dimension A	Dimension B
05	4.0 (0.157)	8.8 (0.346)
06	4.5 (0.177)	9.3 (0.366)
07	5.0 (0.197)	9.8 (0.386)
08	5.5 (0.217)	10.3 (0.406)
09	6.0 (0.236)	10.8 (0.425)
10	6.5 (0.256)	11.3 (0.445)
11	7.0 (0276)	11.8 (0.465)
12	7.5 (0.295)	12.3 (0.484)
13	8.0 (0.315)	12.8 (0.504)
14	8.5 (0.335)	13.3 (0.524)

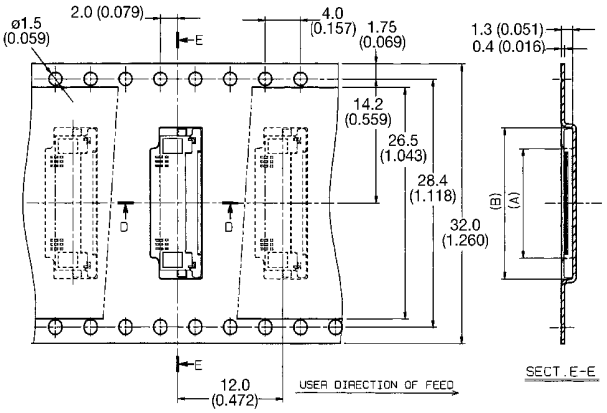

No. of Contacts	Dimension A	Dimension B
15	9.0 (0.354)	13.8 (0.543)
16	9.5 (0.374)	14.3 (0.563)
17	10.0 (0.394)	14.8 (0.583)
18	10.5 (0.413)	15.3 (0.602)
19	11.0 (0.433)	15.8 (0.622)
20	11.5 (0.453)	16.3 (0.642)

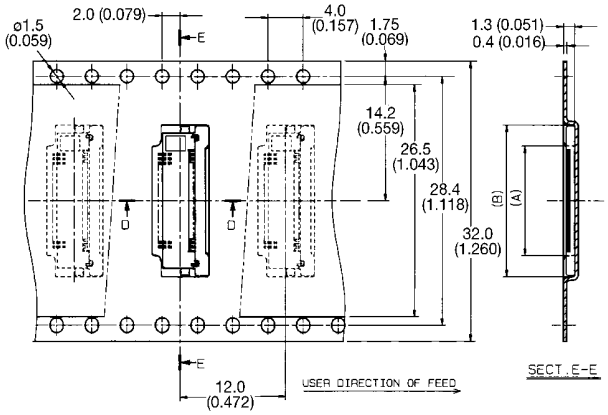

No. of Contacts	Dimension A	Dimension B
21	12.0 (0.472)	16.8 (0.661)
22	12.5 (0.492)	17.3 (0.681)
23	13.0 (0.512)	17.8 (0.701)
24	13.5 (0.531)	18.3 (0.720)
25	14.0 (0.551)	18.8 (0.740)
26	14.5 (0.571)	19.3 (0.760)
27	15.0 (0.591)	19.8 (0.780)
28	15.5 (0.610)	20.3 (0.799)
29	16.0 (0.630)	20.8 (0.819)
30	16.5 (0.650)	21.3 (0.839)

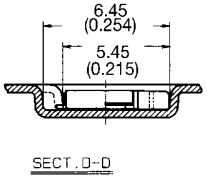

HOW TO ORDER

04	62XX	0XX	000	800

Series Number
6250
6270

Number of Contacts

Finish Code
800 = Series 6250 (Tln-Plated)
883 = Series 6270 (Au=0.1mm)

2000 Connectors per Tape and Reel.

0.50mm Pitch
Series 6252/6272 - ZIF Right Angle SMT (Top Contact Type) 0.90mm Profile Height

Specifications

- Number of Contacts – 5-32
- 2000 Connectors per Tape & Reel
- Voltage – 50V
- Current Rating – 0.4 amp max.
- Dielectric Withstanding Voltage – 200V RMS min.
- Operating Temperature – (-20°C - +85°C)
- Contact Material – phosphor bronze (tin-lead plated)
- Insulator Material – plastic (UL 94 V-O)
- Slider Material – plastic (UL 94 V-O)
- FFC/FPC Thickness – 0.2 ±0.03mm (0.008 ±0.001")
- Profile Height – 0.90mm

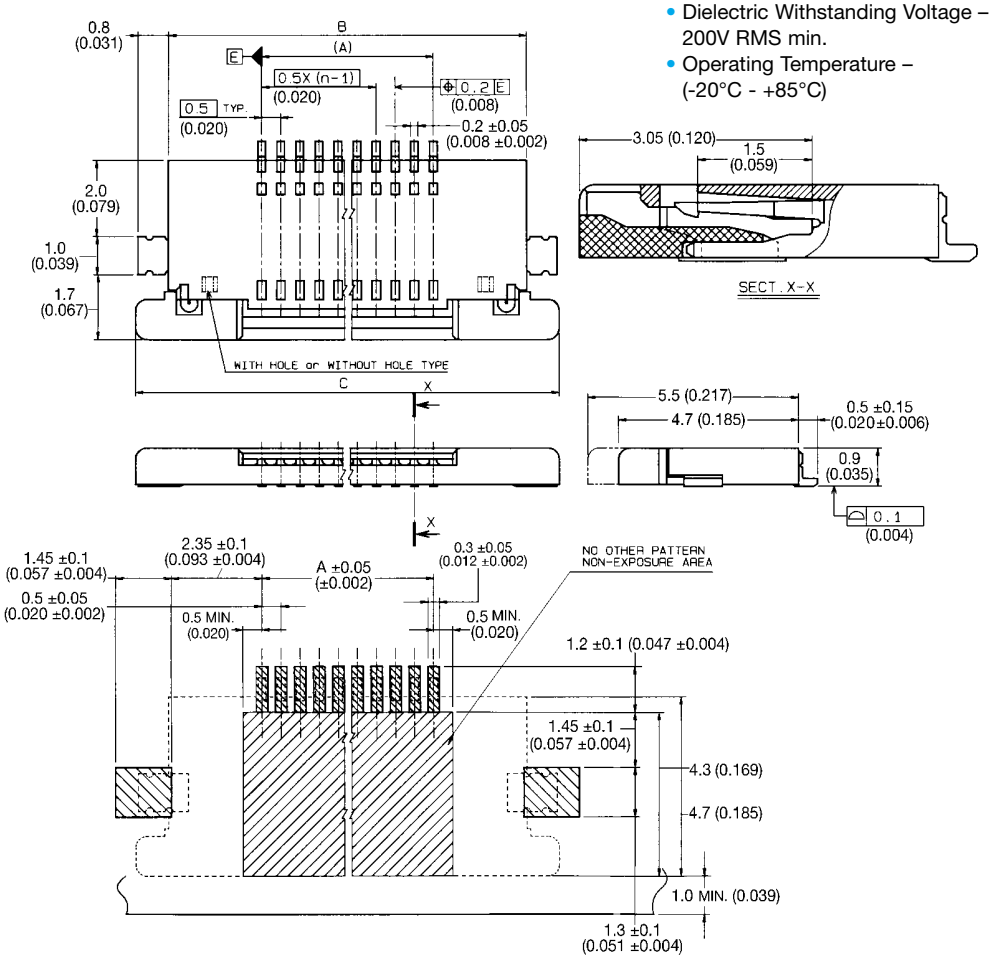

MOUNTING LAYOUT

	FPC	
	1	2
M	0.5±0.12	0.5±0.1
P	0.5±0.02	0.5±0.05
A	A±0.03	A±0.05
W	W±0.07	W±0.07
Wp	$0.35^{+0.04}_{-0.03}$	0.35±0.05

Applicable FPC

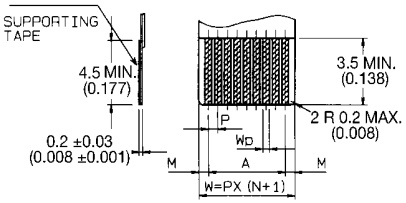

No. of Contacts	Dimension		
	A	B	C
05	2.0 (0.079)	6.9 (0.272)	8.6 (0.339)
06	2.5 (0.098)	7.4 (0.291)	9.1 (0.358)
07	3.0 (0.118)	7.9 (0.311)	9.6 (0.378)
08	3.5 (0.138)	8.4 (0.331)	10.1 (0.398)
09	4.0 (0.157)	8.9 (0.350)	10.6 (0.417)
10	4.5 (0.177)	9.4 (0.370)	11.1 (0.437)
11	5.0 (0.197)	9.9 (0.390)	11.6 (0.457)
12	5.5 (0.217)	10.4 (0.409)	12.1 (0.476)
13	6.0 (0.236)	10.9 (0.429)	12.6 (0.496)
14	6.5 (0.256)	11.4 (0.449)	13.1 (0.516)
15	7.0 (0.276)	11.9 (0.469)	13.6 (0.535)
16	7.5 (0.295)	12.4 (0.488)	14.1 (0.555)
17	8.0 (0.315)	12.9 (0.508)	14.6 (0.575)
18	8.5 (0.335)	13.4 (0.528)	15.1 (0.594)
19	9.0 (0.354)	13.9 (0.547)	15.6 (0.614)
20	9.5 (0.374)	14.4 (0.567)	16.1 (0.634)
21	10.0 (0.394)	14.9 (0.587)	16.6 (0.654)
22	10.5 (0.413)	15.4 (0.606)	17.1 (0.673)
23	11.0 (0.433)	15.9 (0.626)	17.6 (0.693)
24	11.5 (0.453)	16.4 (0.646)	18.1 (0.713)
25	12.0 (0.472)	16.9 (0.665)	18.6 (0.732)
26	12.5 (0.492)	17.4 (0.685)	19.1 (0.752)
27	13.0 (0.512)	17.9 (0.705)	19.6 (0.772)
28	13.5 (0.531)	18.4 (0.724)	20.1 (0.791)
29	14.0 (0.551)	18.9 (0.744)	20.6 (0.811)
30	14.5 (0.571)	19.4 (0.764)	21.1 (0.831)
31	15.0 (0.591)	19.9 (0.783)	21.6 (0.850)
32	15.5 (0.610)	20.4 (0.803)	22.1 (0.870)

HOW TO ORDER

04	62XX	0XX	000	800
	Series Number 6252 6272	Number of Contacts		Finish Code 800 = Series 6252 (Tln-Plated) 883 = Series 6272 (Au=0.1mm)

2000 Connectors per Tape and Reel.

0.50mm Pitch

Series 6252/6272 - Tape and Reel Package

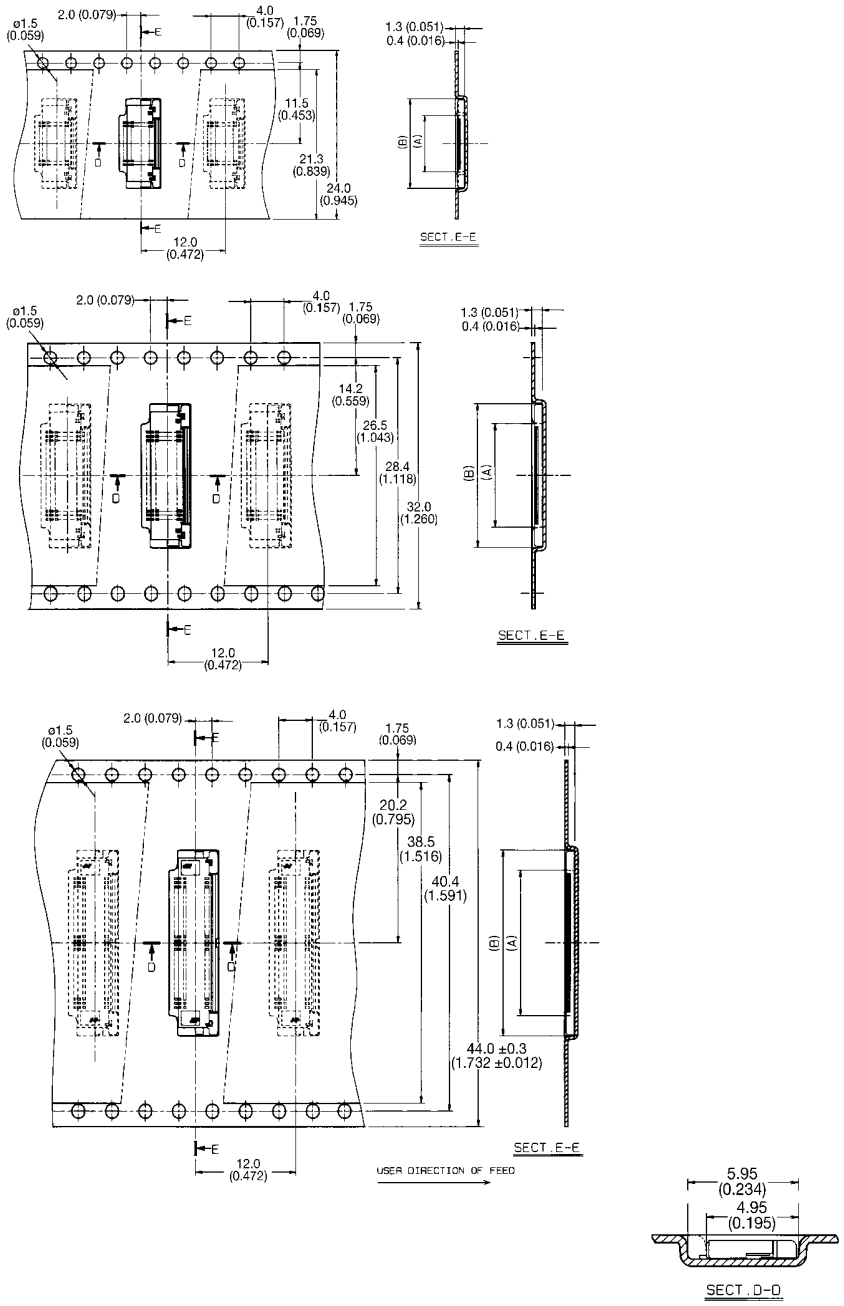

No. of Contacts	Dimension	
	A	B
05	4.0 (0.157)	8.8 (0.346)
06	4.5 (0.177)	9.3 (0.366)
07	5.0 (0.197)	9.8 (0.386)
08	5.5 (0.217)	10.3 (0.406)
09	6.0 (0.236)	10.8 (0.425)
10	6.5 (0.256)	11.3 (0.445)
11	7.0 (0276)	11.8 (0.465)
12	7.5 (0.295)	12.3 (0.484)
13	8.0 (0.315)	12.8 (0.504)
14	8.5 (0.335)	13.3 (0.524)

No. of Contacts	Dimension	
	A	B
15	9.0 (0.354)	13.8 (0.543)
16	9.5 (0.374)	14.3 (0.563)
17	10.0 (0.394)	14.8 (0.583)
18	10.5 (0.413)	15.3 (0.602)
19	11.0 (0.433)	15.8 (0.622)
20	11.5 (0.453)	16.3 (0.642)
21	12.0 (0.472)	16.8 (0.661)
22	12.5 (0.492)	17.3 (0.681)
23	13.0 (0.512)	17.8 (0.701)
24	13.5 (0.531)	18.3 (0.720)
25	14.0 (0.551)	18.8 (0.740)
26	14.5 (0.571)	19.3 (0.760)
27	15.0 (0.591)	19.8 (0.780)
28	15.5 (0.610)	20.3 (0.799)
29	16.0 (0.630)	20.8 (0.819)
30	16.5 (0.650)	21.3 (0.839)

No. of Contacts	Dimension	
	A	B
31	17.0 (0.669)	21.8 (0.858)
32	17.5 (0.689)	22.3 (0.878)

HOW TO ORDER

04	62XX	0XX	000	800

Series Number
6252
6272

Number of Contacts

Finish Code
800 = Series 6252 (Tln-Plated)
883 = Series 6272 (Au=0.1mm)

2000 Connectors per Tape and Reel.

0.50mm Pitch

Series 6239/6269 - ZIF Right Angle SMT One-Touch Lock (Bottom Contact Type)

Specifications

- Number of Contacts – 5-30
- 2000 Connectors per Tape & Reel
- Voltage – 50V
- Current Rating – 0.4 amp max.
- Dielectric Withstanding Voltage – 200V RMS min.
- Operating Temperature – (-20°C - +85°C)
- Contact Material – phosphor bronze (tin-lead plated)
- Insulator Material – nylon 46, natural color
- Slider Material – PPS, natural color
- FFC/FPC Thickness – 0.3 ±0.05mm (0.012 ±0.002")
- Profile Height – 1.50mm

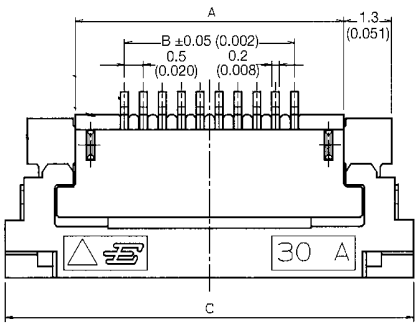

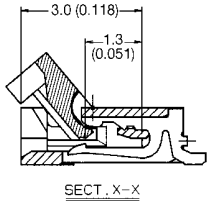

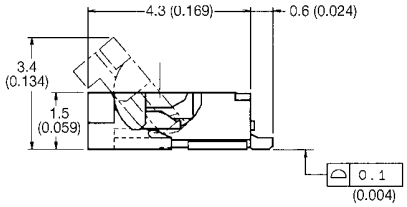

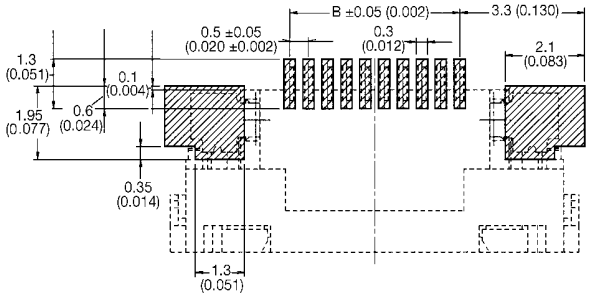

MOUNTING LAYOUT
(CONN. MOUNTING SIDE)

No. of Contacts	Dimension		
	A	B	C
05	4.6 (0.181)	2.0 (0.079)	8.3 (0.327)
06	5.1 (0.201)	2.5 (0.098)	8.8 (0.346)
07	5.6 (0.220)	3.0 (0.118)	9.3 (0.366)
08	6.1 (0.240)	3.5 (0.138)	9.8 (0.386)
09	6.6 (0.260)	4.0 (0.157)	10.3 (0.406)
10	7.1 (0.280)	4.5 (0.177)	10.8 (0.425)
11	7.6 (0.299)	5.0 (0.197)	11.3 (0.445)
12	8.1 (0.319)	5.5 (0.217)	11.8 (0.465)
13	8.6 (0.339)	6.0 (0.236)	12.3 (0.484)
14	9.1 (0.358)	6.5 (0.256)	12.8 (0.504)
15	9.6 (0.378)	7.0 (0.276)	13.3 (0.524)
16	10.1 (0.398)	7.5 (0.295)	13.8 (0.543)
17	10.6 (0.417)	8.0 (0.315)	14.3 (0.563)
18	11.1 (0.437)	8.5 (0.335)	14.8 (0.583)
19	11.6 (0.457)	9.0 (0.354)	15.3 (0.602)
20	12.1 (0.476)	9.5 (0.374)	15.8 (0.622)
21	12.6 (0.496)	10.0 (0.394)	16.3 (0.642)
22	13.1 (0.516)	10.5 (0.413)	16.8 (0.661)
23	13.6 (0.535)	11.0 (0.433)	17.3 (0.681)
24	14.1 (0.555)	11.5 (0.453)	17.8 (0.701)
25	14.6 (0.575)	12.0 (0.472)	18.3 (0.720)
26	15.1 (0.594)	12.5 (0.492)	18.8 (0.740)
27	15.6 (0.614)	13.0 (0.512)	19.3 (0.760)
28	16.1 (0.634)	13.5 (0.531)	19.8 (0.780)
29	16.6 (0.654)	14.0 (0.551)	20.3 (0.799)
30	17.1 (0.673)	14.5 (0.571)	20.8 (0.819)

	FFC		FPC	
	1	2	1	2
M	0.5±0.1	0.5±0.08	0.5±0.12	0.5±0.1
P	0.5±0.03	0.5±0.05	0.5±0.02	0.5±0.05
B	B±0.03	B±0.05	B±0.03	B±0.05
W	W±0.07	W±0.07	W±0.07	W±0.07
Wp	$0.3^{+0.05}_{-0.02}$	$0.3^{+0.05}_{-0.02}$	$0.35^{+0.04}_{-0.03}$	$0.35^{+0.05}$

Applicable FFC, FPC

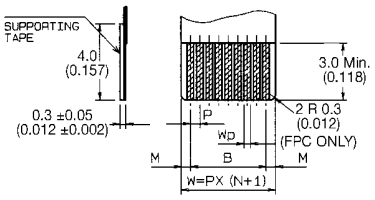

HOW TO ORDER

04	62XX	0XX	001	800
	Series Number 6239 6269 (C/Ag type)	Number of Contacts		

2000 Connectors per Tape and Reel.

0.50mm Pitch

Series 6239/6269 - Tape and Reel Package

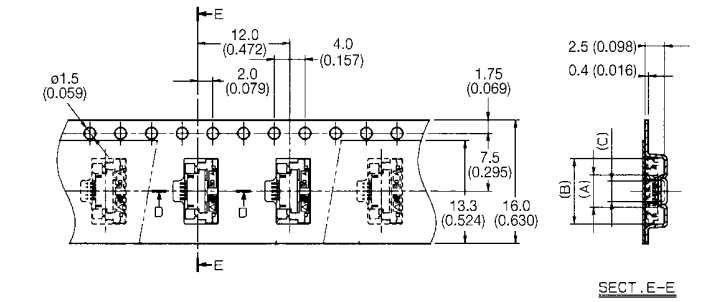

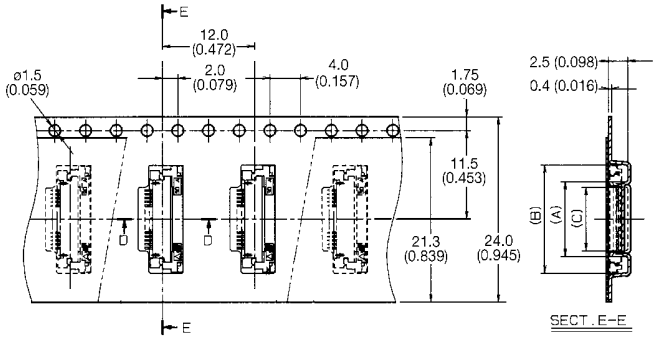

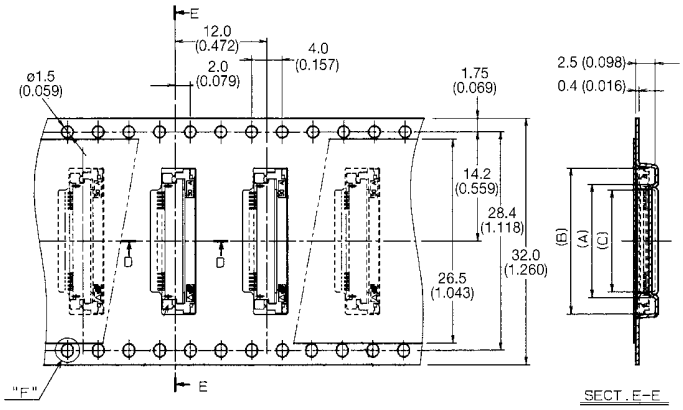

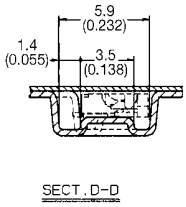

No. of Contacts	Dimension		
	A	B	C
05	4.2 (0.165)	8.5 (0.335)	2.7 (0.106)

No. of Contacts	Dimension		
	A	B	C
06	4.7 (0.185)	9.0 (0.354)	3.2 (0.126)
07	5.2 (0.205)	9.5 (0.374)	3.7 (0.146)
08	5.7 (0.224)	10.0 (0.394)	4.2 (0.165)
09	6.2 (0.244)	10.5 (0.413)	4.7 (0.185)
10	6.7 (0.264)	11.0 (0.433)	5.2 (0.205)
11	7.2 (0.283)	11.5 (0.453)	5.7 (0.224)
12	7.7 (0.303)	12.0 (0.472)	6.2 (0.244)
13	8.2 (0.323)	12.5 (0.492)	6.7 (0.264)
14	8.7 (0.343)	13.0 (0.512)	7.2 (0.283)
15	9.2 (0.362)	13.5 (0.531)	7.7 (0.303)
16	9.7 (0.382)	14.0 (0.551)	8.2 (0.323)
17	10.2 (0.402)	14.5 (0.571)	8.7 (0.343)
18	10.7 (0.421)	15.0 (0.591)	9.2 (0.362)
19	11.2 (0.441)	15.5 (0.610)	9.7 (0.382)
20	11.7 (0.461)	16.0 (0.630)	10.2 (0.402)
21	12.2 (0.480)	16.5 (0.650)	10.7 (0.421)

No. of Contacts	Dimension		
	A	B	C
22	12.7 (0.500)	17.0 (0.669)	11.2 (0.441)
23	13.2 (0.520)	17.5 (0.689)	11.7 (0.461)
24	13.7 (0.539)	18.0 (0.709)	12.2 (0.480)
25	14.2 (0.559)	18.5 (0.728)	12.7 (0.500)
26	14.7 (0.579)	19.0 (0.748)	13.2 (0.520)
27	15.2 (0.598)	19.5 (0.768)	13.7 (0.539)
28	15.7 (0.618)	20.0 (0.787)	14.2 (0.559)
29	16.2 (0.638)	20.5 (0.807)	14.7 (0.579)
30	16.7 (0.658)	21.0 (0.827)	15.2 (0.598)

HOW TO ORDER

04	62XX	0XX	001	800

Series Number
6239
6269 (C/Ag type)

Number of Contacts

2000 Connectors per Tape and Reel.

0.50mm Pitch

Series 6240 - ZIF Right Angle SMT One-Touch Lock (Bottom Contact Type)

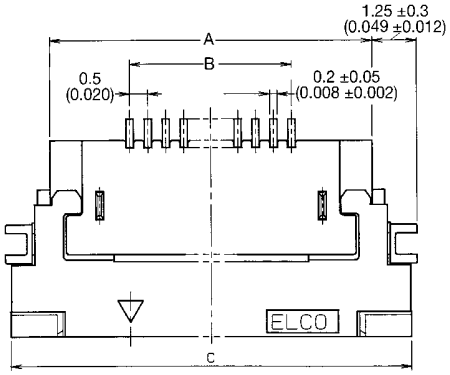

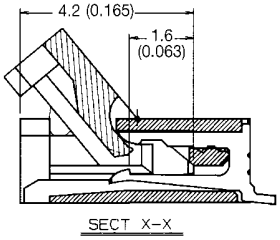

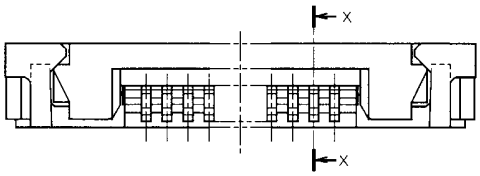

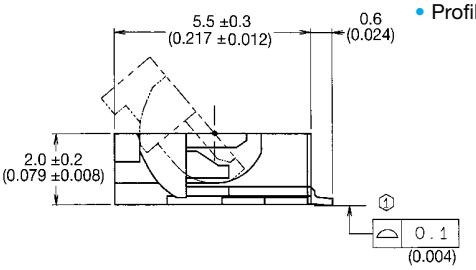

Specifications

- Number of Contacts – 30-50
- 2000 Connectors per Tape & Reel
- Voltage – 50V
- Current Rating – 0.4 amp max.
- Dielectric Withstanding Voltage – 200V RMS min.
- Operating Temperature – (-40°C - +85°C)
- Contact Material – phosphor bronze (tin-lead plated)
- Insulator Material – PPS, natural color
- Slider Material – PPS, natural color
- FFC/FPC Thickness – 0.3 ±0.05mm (0.012 ±0.002")
- Profile Height – 2.00mm

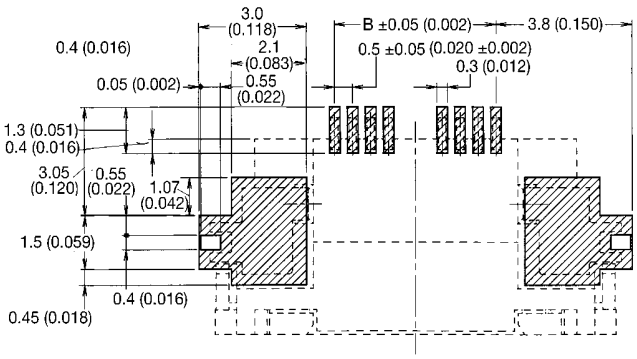

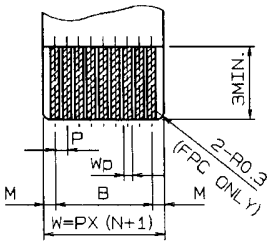

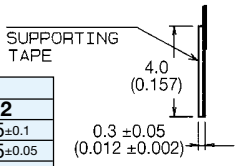

	FFC		FPC	
	1	2	1	2
M	0.5±0.1	0.5±0.08	0.5±0.12	0.5±0.1
P	0.5±0.03	0.5±0.05	0.5±0.02	0.5±0.05
B	B±0.03	B±0.05	B±0.03	B±0.05
W	W±0.07	W±0.07	W±0.07	W±0.07
Wp	$0.3^{+0.05}_{-0.02}$	$0.3^{+0.05}_{-0.02}$	$0.35^{+0.04}_{-0.03}$	$0.35^{+0.05}$

Applicable FFC, FPC

No. of Contacts	Dimension		
	A	B	C
30	19.0 (0.748)	14.5 (0.571)	21.2 (0.835)
31	19.5 (0.768)	15.0 (0.591)	21.7 (0.854)
32	20.0 (0.787)	15.5 (0.610)	22.2 (0.874)
33	20.5 (0.807)	16.0 (0.630)	22.7 (0.894)
34	21.0 (0.827)	16.5 (0.650)	23.2 (0.913)
35	21.5 (0.846)	17.0 (0.669)	23.7 (0.933)
36	22.0 (0.866)	17.5 (0.689)	24.2 (0.953)
37	22.5 (0.886)	18.0 (0.709)	24.7 (0.972)
38	23.0 (0.906)	18.5 (0.728)	25.2 (0.992)
39	23.5 (0.925)	19.0 (0.748)	25.7 (1.012)
40	24.0 (0.945)	19.5 (0.768)	26.2 (1.031)
41	24.5 (0.965)	20.0 (0.787)	26.7 (1.051)
42	25.0 (0.984)	20.5 (0.807)	27.2 (1.071)
43	25.5 (1.004)	21.0 (0.827)	27.7 (1.091)
44	26.0 (1.024)	21.5 (0.846)	28.2 (1.110)
45	26.5 (1.043)	22.0 (0.866)	28.7 (1.130)
46	27.0 (1.063)	22.5 (0.886)	29.2 (1.150)
47	27.5 (1.083)	23.0 (0.906)	29.7 (1.169)
48	28.0 (1.102)	23.5 (0.925)	30.2 (1.189)
49	28.5 (1.122)	24.0 (0.945)	30.7 (1.209)
50	29.0 (1.142)	24.5 (0.965)	31.2 (1.228)

HOW TO ORDER

04	6240	0XX	001	800
		Number of Contacts		

2000 Connectors per Tape and Reel.

ELCO

0.50mm Pitch

Series 6240 – Tape and Reel Package

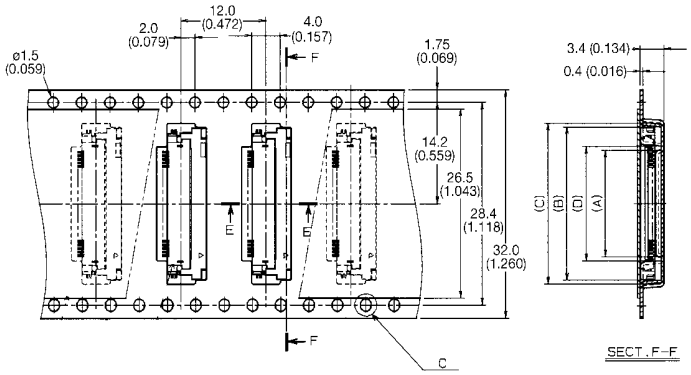

No. of Contacts	Dimension			
	A	B	C	D
30	14.9 (0.587)	21.4 (0.843)	22.5 (0.886)	16.0 (0.630)

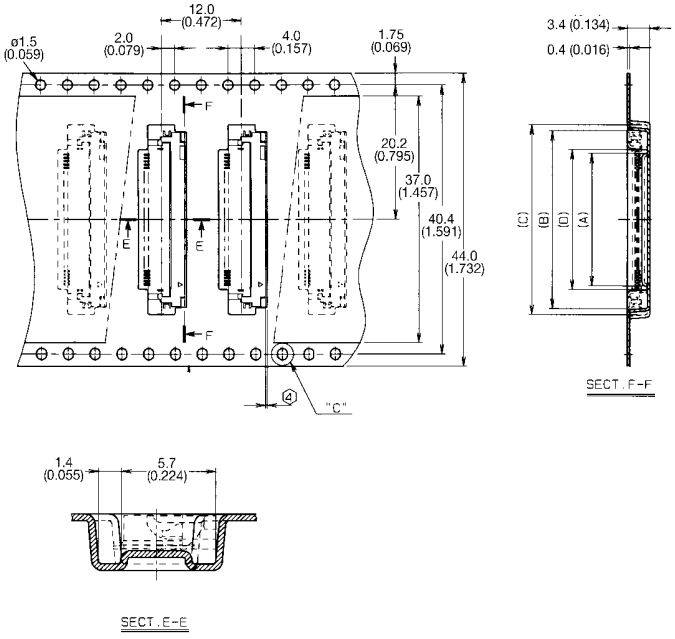

No. of Contacts	Dimension			
	A	B	C	D
31	15.4 (0.606)	21.9 (0.862)	23.0 (0.906)	16.5 (0.650)
32	15.9 (0.626)	22.4 (0.882)	23.5 (0.925)	17.0 (0.669)
33	16.4 (0.646)	22.9 (0.902)	24.0 (0.945)	17.5 (0.689)
34	16.9 (0.665)	23.4 (0.921)	24.5 (0.965)	18.0 (0.709)
35	17.4 (0.685)	23.9 (0.941)	25.0 (0.984)	18.5 (0.728)
36	17.9 (0.705)	24.4 (0.961)	25.5 (1.004)	19.0 (0.748)
37	18.4 (0.724)	24.9 (0.980)	26.0 (1.024)	19.5 (0.768)
38	18.9 (0.744)	25.4 (1.000)	26.5 (1.043)	20.0 (0.787)
39	19.4 (0.764)	25.9 (1.020)	27.0 (1.063)	20.5 (0.807)
40	19.9 (0.783)	26.4 (1.039)	27.5 (1.083)	21.0 (0.827)
41	20.4 (0.803)	26.9 (1.059)	28.0 (1.102)	21.5 (0.846)
42	20.9 (0.823)	27.4 (1.079)	28.5 (1.122)	22.0 (0.866)
43	21.4 (0.843)	27.9 (1.098)	29.0 (1.142)	22.5 (0.886)
44	21.9 (0.862)	28.4 (1.118)	29.5 (1.161)	23.0 (0.906)
45	22.4 (0.882)	28.9 (1.138)	30.0 (1.181)	23.5 (0.925)
46	22.9 (0.902)	29.4 (1.157)	30.5 (1.201)	24.0 (0.945)
47	23.4 (0.921)	29.9 (1.177)	31.0 (1.220)	24.5 (0.965)
48	23.9 (0.941)	30.4 (1.197)	31.5 (1.240)	25.0 (0.984)
49	24.4 (0.961)	30.9 (1.217)	32.0 (1.260)	25.5 (1.004)
50	24.9 (0.980)	31.4 (1.236)	32.5 (1.280)	26.0 (1.024)

HOW TO ORDER

04	6240	0XX	001	800

0XX: Number of Contacts

2000 Connectors per Tape and Reel.

0.50mm Pitch
Series 6210/6260 – ZIF Right Angle SMT (Bottom Contact Type)

Specifications

- Number of Contacts – 5-40
- 2000 Connectors per Tape & Reel
- Voltage – 50V
- Current Rating – 0.4 amp max.
- Dielectric Withstanding Voltage – 200V RMS min.
- Operating Temperature – (-40°C - +85°C)
- Contact Material – phosphor bronze (tin-lead plated)
- Insulator Material – nylon 46, natural color
- Slider Material – PPS, natural color (UL 94 V-O)
- FFC/FPC Thickness – 0.3 ±0.05mm (0.012 ±0.002")
- Profile Height – 2.00mm

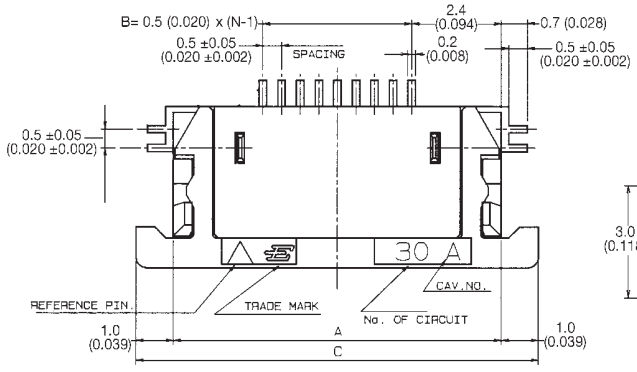

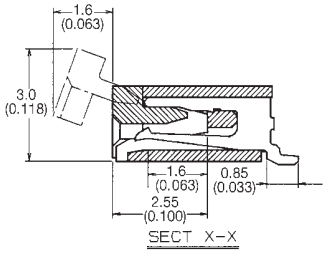

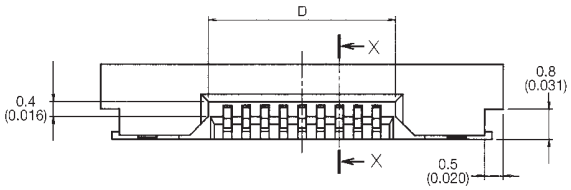

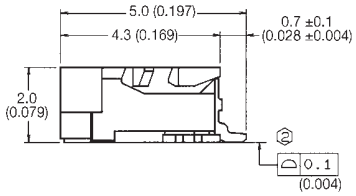

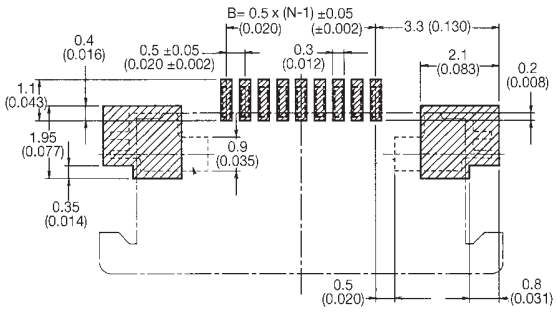

MOUNTING LAYOUT (CONN. MOUNTING SIDE)

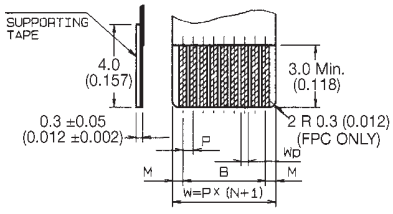

	FFC		FPC	
	1	2	1	2
M	0.5±0.1	0.5±0.08	0.5±0.12	0.5±0.1
P	0.5±0.03	0.5±0.05	0.5±0.02	0.5±0.05
B	B±0.03	B±0.05	B±0.03	B±0.05
W	W±0.07	W±0.07	W±0.07	W±0.07
Wp	$0.3^{+0.05}_{-0.02}$	$0.3^{+0.05}_{-0.02}$	$0.35^{+0.04}_{-0.03}$	$0.35^{+0.05}$

Applicable FFC, FPC

No. of Contacts	Dimension			
	A	B	C	D
05	6.8 (0.268)	2.0 (0.079)	8.8 (0.346)	3.1 (0.122)
06	7.3 (0.287)	2.5 (0.098)	9.3 (0.366)	3.6 (0.142)
07	7.8 (0.307)	3.0 (0.118)	9.8 (0.386)	4.1 (0.161)
08	8.3 (0.327)	3.5 (0.138)	10.3 (0.406)	4.6 (0.181)
09	8.8 (0.346)	4.0 (0.157)	10.8 (0.425)	5.1 (0.201)
10	9.3 (0.366)	4.5 (0.177)	11.3 (0.445)	5.6 (0.220)
11	9.8 (0.386)	5.0 (0.197)	11.8 (0.465)	6.1 (0.240)
12	10.3 (0.406)	5.5 (0.217)	12.3 (0.484)	6.6 (0.260)
13	10.8 (0.425)	6.0 (0.236)	12.8 (0.504)	7.1 (0.280)
14	11.3 (0.445)	6.5 (0.256)	13.3 (0.524)	7.6 (0.299)
15	11.8 (0.465)	7.0 (0.276)	13.8 (0.543)	8.1 (0.319)
16	12.3 (0.484)	7.5 (0.295)	14.3 (0.563)	8.6 (0.339)
17	12.8 (0.504)	8.0 (0.315)	14.8 (0.583)	9.1 (0.358)
18	13.3 (0.524)	8.5 (0.335)	15.3 (0.602)	9.6 (0.378)
19	13.8 (0.543)	9.0 (0.354)	15.8 (0.622)	10.1 (0.398)
20	14.3 (0.563)	9.5 (0.374)	16.3 (0.642)	10.6 (0.417)
21	14.8 (0.583)	10.0 (0.394)	16.8 (0.661)	11.1 (0.437)
22	15.3 (0.602)	10.5 (0.413)	17.3 (0.681)	11.6 (0.457)
23	15.8 (0.622)	11.0 (0.433)	17.8 (0.701)	12.1 (0.476)
24	16.3 (0.642)	11.5 (0.453)	18.3 (0.720)	12.6 (0.496)
25	16.8 (0.661)	12.0 (0.472)	18.8 (0.740)	13.1 (0.516)
26	17.3 (0.681)	12.5 (0.492)	19.3 (0.760)	13.6 (0.535)
27	17.8 (0.701)	13.0 (0.512)	19.8 (0.780)	14.1 (0.555)
28	18.3 (0.720)	13.5 (0.531)	20.3 (0.799)	14.6 (0.575)
29	18.8 (0.740)	14.0 (0.551)	20.8 (0.819)	15.1 (0.594)
30	19.3 (0.760)	14.5 (0.571)	21.3 (0.839)	15.6 (0.614)
33	20.8 (0.819)	16.0 (0.630)	22.8 (0.898)	17.1 (0.673)
34	21.3 (0.839)	16.5 (0.650)	23.3 (0.917)	17.6 (0.693)
35	21.8 (0.858)	17.0 (0.669)	23.8 (0.937)	18.1 (0.713)
36	22.3 (0.878)	17.5 (0.689)	24.3 (0.957)	18.6 (0.732)
40	24.3 (0.957)	19.5 (0.768)	26.3 (1.035)	20.6 (0.811)

HOW TO ORDER

08 **62XX** **0XX** **340** **800**

Series Number
6210
6260 (C/Ag type)

Number of Contacts

2000 Connectors per Tape and Reel.

ELCO

0.50mm Pitch

Series 6210/6260 - Tape and Reel Package

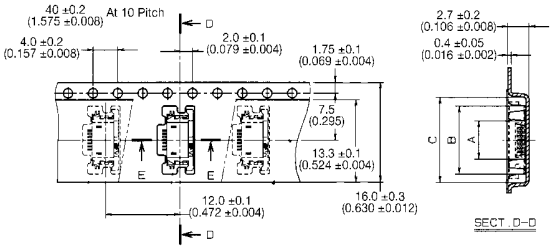

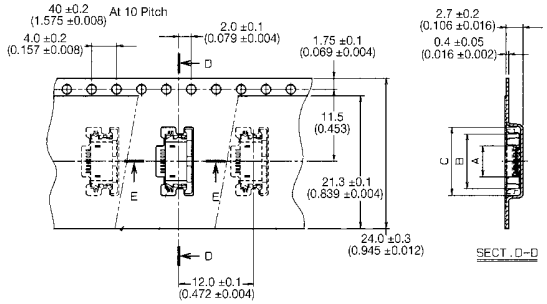

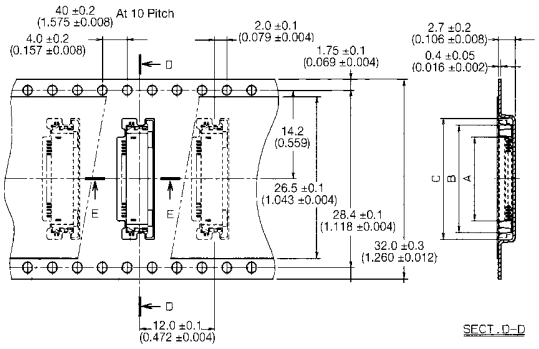

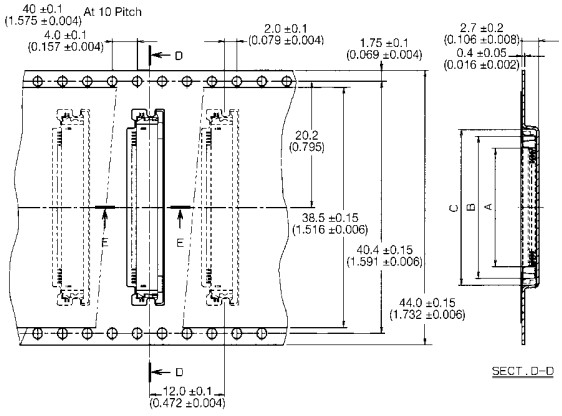

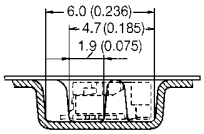

SECT. E-E

No. of Contacts	Dimension		
	A	B	C
05	3.4 (0.134)	7.2 (0.283)	9.4 (0.370)
06	3.9 (0.154)	7.7 (0.303)	9.9 (0.390)

No. of Contacts	Dimension		
	A	B	C
07	4.4 (0.173)	8.2 (0.323)	10.4 (0.409)
08	4.9 (0.193)	8.7 (0.343)	10.9 (0.429)
09	5.4 (0.213)	9.2 (0.362)	11.4 (0.449)
10	5.9 (0.232)	9.7 (0.382)	11.9 (0.469)
11	6.4 (0.252)	10.2 (0.402)	12.4 (0.488)
12	6.9 (0.272)	10.7 (0.421)	12.9 (0.508)
13	7.4 (0.291)	11.2 (0.441)	13.4 (0.528)
14	7.9 (0.311)	11.7 (0.461)	13.9 (0.547)
15	8.4 (0.331)	12.2 (0.480)	14.4 (0.567)
16	8.9 (0.350)	12.7 (0.500)	14.9 (0.587)
17	9.4 (0.370)	13.2 (0.520)	15.4 (0.606)
18	9.9 (0.390)	13.7 (0.539)	15.9 (0.626)
19	10.4 (0.409)	14.2 (0.559)	16.4 (0.646)
20	10.9 (0.429)	14.7 (0.579)	16.9 (0.665)
21	11.4 (0.449)	15.2 (0.598)	17.4 (0.685)
22	11.9 (0.469)	15.7 (0.618)	17.9 (0.705)
23	12.4 (0.488)	16.2 (0.638)	18.4 (0.724)
24	12.9 (0.508)	16.7 (0.658)	18.9 (0.744)

No. of Contacts	Dimension		
	A	B	C
25	13.4 (0.528)	17.2 (0.677)	19.4 (0.764)
26	13.9 (0.547)	17.7 (0.697)	19.9 (0.783)
27	14.4 (0.567)	18.2 (0.717)	20.4 (0.803)
28	14.9 (0.587)	18.7 (0.736)	20.9 (0.823)
29	15.4 (0.606)	19.2 (0.756)	21.4 (0.843)
30	15.9 (0.626)	19.7 (0.776)	21.9 (0.862)
33	17.4 (0.685)	21.2 (0.835)	23.4 (0.921)
34	17.9 (0.705)	21.7 (0.854)	23.9 (0.941)
35	18.4 (0.724)	22.2 (0.874)	24.4 (0.961)
36	18.9 (0.744)	22.7 (0.894)	24.9 (0.980)
40	20.9 (0.823)	24.7 (0.972)	26.9 (1.059)

HOW TO ORDER

08	62XX	0XX	340	800

Series Number
6210
6260 (C/Ag type)

Number of Contacts

2000 Connectors per Tape and Reel.

0.50mm Pitch

Series 6212/6262 - ZIF Right Angle SMT (Top Contact Type)

Specifications

- Number of Contacts – 5-40
- 2000 Connectors per Tape & Reel
- Voltage – 50V
- Current Rating – 0.4 amp max.
- Dielectric Withstanding Voltage – 200V RMS min.
- Operating Temperature – (-40°C - +85°C)
- Contact Material – phosphor bronze (tin-lead plated)
- Insulator Material – nylon 46, black color
- Slider Material – PPS, natural color (UL 94 V-O)
- FFC/FPC Thickness – 0.3 ±0.05mm (0.012 ±0.002")
- Profile Height – 2.00mm

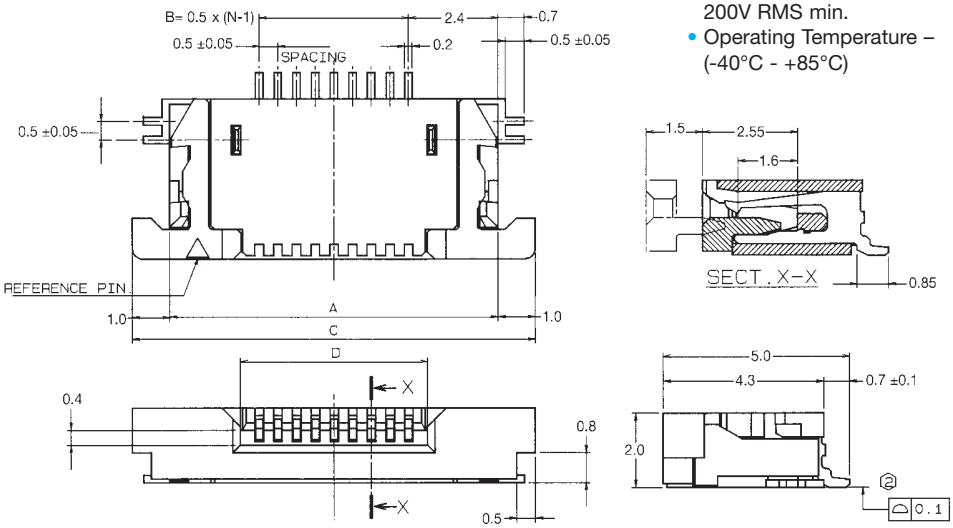

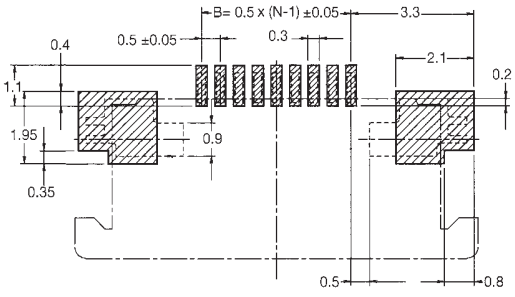

MOUNTING LAYOUT (CONN. MOUNTING SIDE)

	FFC		FPC	
	1	2	1	2
M	0.5±0.1	0.5±0.08	0.5±0.12	0.5±0.1
P	0.5±0.03	0.5±0.05	0.5±0.02	0.5±0.05
B	B±0.03	B±0.05	B±0.03	B±0.05
W	W±0.07	W±0.07	W±0.07	W±0.07
Wp	$0.3^{+0.05}_{-0.02}$	$0.3^{+0.05}_{-0.02}$	$0.35^{+0.04}_{-0.03}$	$0.35^{+0.05}$

Applicable FFC, FPC

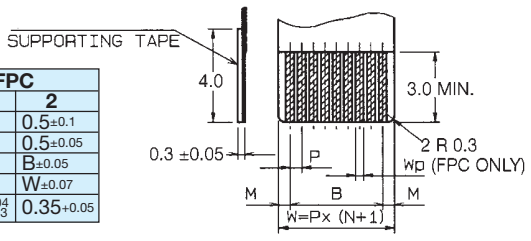

No. of Contacts	Dimension			
	A	B	C	D
06	7.3	2.5	9.3	3.6
07	7.8	3.0	9.8	4.1
08	8.3	3.5	10.3	4.6
09	8.8	4.0	10.8	5.1
10	9.3	4.5	11.3	5.6
11	9.8	5.0	11.8	6.1
12	10.3	5.5	12.3	6.6
13	10.8	6.0	12.8	7.1
14	11.3	6.5	13.3	7.6
15	11.8	7.0	13.8	8.1
16	12.3	7.5	14.3	8.6
17	12.8	8.0	14.8	9.1
18	13.3	8.5	15.3	9.6
19	13.8	9.0	15.8	10.1
20	14.3	9.5	16.3	10.6
21	14.8	10.0	16.8	11.1
22	15.3	10.5	17.3	11.6
23	15.8	11.0	17.8	12.1
24	16.3	11.5	18.3	12.6
25	16.8	12.0	18.8	13.1
26	17.3	12.5	19.3	13.6
27	17.8	13.0	19.8	14.1
28	18.3	13.5	20.3	14.6
29	18.8	14.0	20.8	15.1
30	19.3	14.5	21.3	15.6
33	20.8	16.0	22.8	17.1
34	21.3	16.5	23.3	17.6
35	21.8	17.0	23.8	18.1
36	22.3	17.5	24.3	18.6
40	24.3	19.5	26.3	20.6

HOW TO ORDER

08	62XX	0XX	340	800

Series Number
6212
6262 (C/Ag type)

Number of Contacts

2000 Connectors per Tape and Reel.

0.50mm Pitch

Series 6212/6262 - Tape and Reel Package

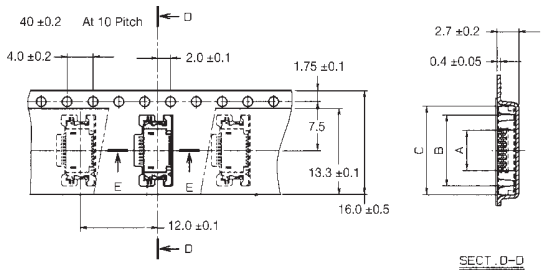

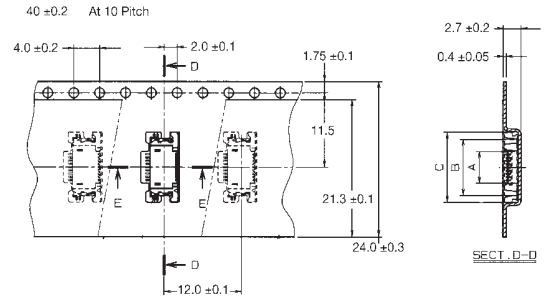

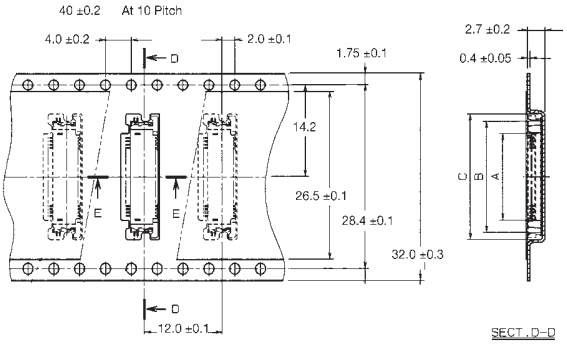

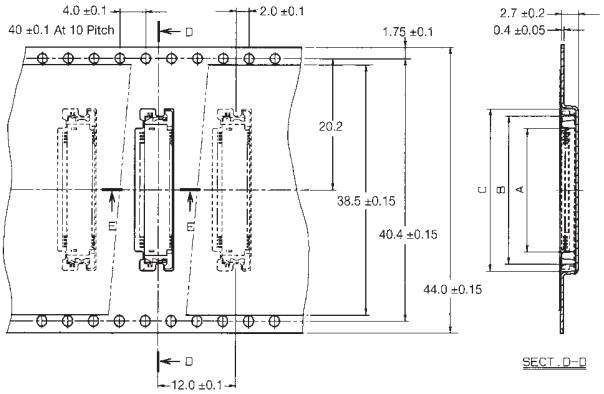

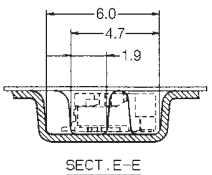

No. of Contacts	Dimension		
	A	B	C
05	3.4	7.2	9.4
06	3.9	7.7	9.9

No. of Contacts	Dimension		
	A	B	C
07	4.4	8.2	10.4
08	4.9	8.7	10.9
09	5.4	9.2	11.4
10	5.9	9.7	11.9
11	6.4	10.2	12.4
12	6.9	10.7	12.9
13	7.4	11.2	13.4
14	7.9	11.7	13.9
15	8.4	12.2	14.4
16	8.9	12.7	14.9
17	9.4	13.2	15.4
18	9.9	13.7	15.9
19	10.4	14.2	16.4
20	10.9	14.7	16.9
21	11.4	15.2	17.4
22	11.9	15.7	17.9
23	12.4	16.2	18.4
24	12.9	16.7	18.9

No. of Contacts	Dimension		
	A	B	C
25	13.4	17.2	19.4
26	13.9	17.7	19.9
27	14.4	18.2	20.4
28	14.9	18.7	20.9
29	15.4	19.2	21.4
30	15.9	19.7	21.9

No. of Contacts	Dimension		
	A	B	C
33	17.4	21.2	23.4
34	17.9	21.7	23.9
35	18.4	22.2	24.4
36	18.9	22.7	24.9
38	19.9	23.7	25.9
40	20.9	24.7	26.9

HOW TO ORDER

08	62XX	0XX	340	800

Series Number
6212
6262 (C/Ag type)

Number of Contacts

2000 Connectors per Tape and Reel.

0.50mm Pitch

Series 6254 - LIF Right Angle SMT (Dual Sided Contact Type) 1.20mm Profile Height

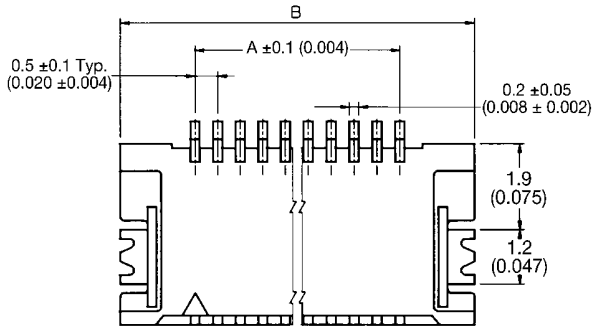

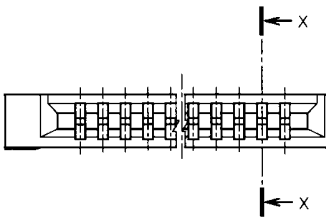

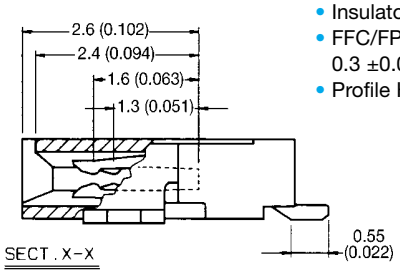

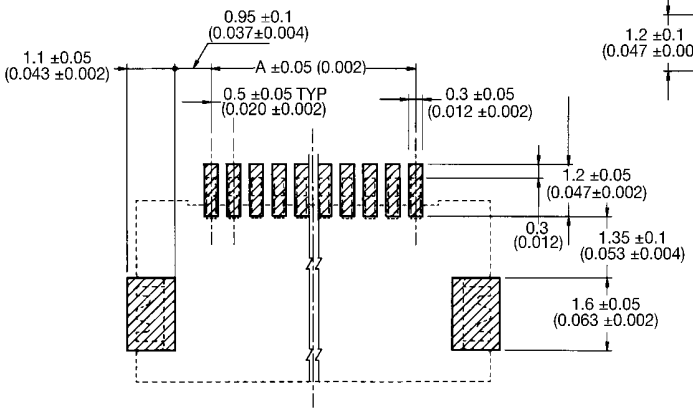

MOUNTING LAYOUT

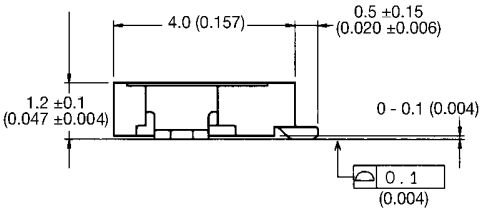

Specifications

- Number of Contacts – 5-20
- 2000 Connectors per Tape & Reel
- Voltage – 50V
- Current Rating – 0.4 amp max.
- Dielectric Withstanding Voltage – 200V RMS min.
- Operating Temperature – (-40°C - +85°C)
- Contact Material – phosphor bronze (tin-lead plated)
- Insulator Material – LCP
- FFC/FPC Thickness – 0.3 ±0.03mm (0.012 ±0.001")
- Profile Height – 1.20mm

No. of Contacts	Dimension A	Dimension B
05	2.0 (0.079)	5.6 (0.220)
06	2.5 (0.098)	6.1 (0.240)
07	3.0 (0.118)	6.6 (0.260)
08	3.5 (0.138)	7.1 (0.280)
09	4.0 (0.157)	7.6 (0.299)
10	4.5 (0.177)	8.1 (0.319)
11	5.0 (0.197)	8.6 (0.339)
12	5.5 (0.217)	9.1 (0.358)
13	6.0 (0.236)	9.6 (0.378)
14	6.5 (0.256)	10.1 (0.398)
15	7.0 (0.276)	10.6 (0.417)
16	7.5 (0.295)	11.1 (0.437)
17	8.0 (0.315)	11.6 (0.457)
18	8.5 (0.335)	12.1 (0.476)
19	9.0 (0.354)	12.6 (0.496)
20	9.5 (0.374)	13.1 (0.516)

	FFC		FPC	
	1	2	1	2
M	0.5±0.1	0.5±0.08	0.5±0.12	0.5±0.1
P	0.5±0.03	0.5±0.05	0.5±0.02	0.5±0.05
A	A±0.03	A±0.05	A±0.03	A±0.05
W	W±0.07	W±0.07	W±0.07	W±0.07
Wp	0.3 +0.05 -0.02	0.3 +0.05 -0.02	0.35 +0.04 -0.03	0.35 +0.05

Applicable FFC, FPC

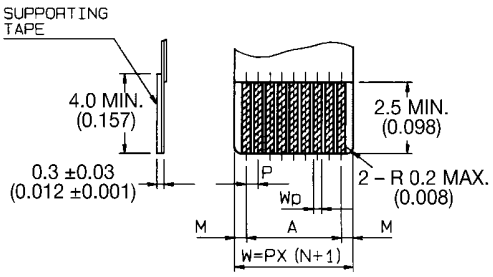

HOW TO ORDER

04	6254	0XX	000	800

0XX – Number of Contacts

800 – 2000 Connectors per Tape and Reel.

0.50mm Pitch

Series 6254 - Tape and Reel Package

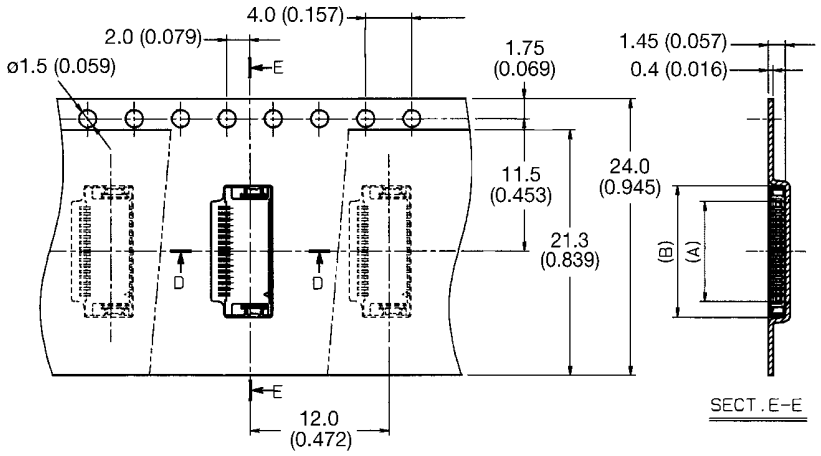

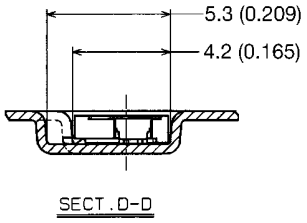

No. of Contacts	Dimension	
	A	B
05	3.2 (0.126)	5.9 (0.232)
06	3.7 (0.146)	6.4 (0.252)
07	4.2 (0.165)	6.9 (0.272)
08	4.7 (0.185)	7.4 (0.291)
09	5.2 (0.205)	7.9 (0.311)
10	5.7 (0.224)	8.4 (0.331)
11	6.2 (0.244)	8.9 (0.350)
12	6.7 (0.264)	9.4 (0.370)
13	7.2 (0.283)	9.9 (0.390)
14	7.7 (0.303)	10.4 (0.409)
15	8.2 (0.323)	10.9 (0.429)
16	8.7 (0.343)	11.4 (0.449)
17	9.2 (0.362)	11.9 (0.469)
18	9.7 (0.382)	12.4 (0.488)
19	10.2 (0.402)	12.9 (0.508)
20	10.7 (0.421)	13.4 (0.528)

HOW TO ORDER

04	6254	0XX	000	800
		Number of Contacts		

2000 Connectors per Tape and Reel.

0.50mm Pitch

Series 6222 - LIF Right Angle SMT (Bottom Contact Type)

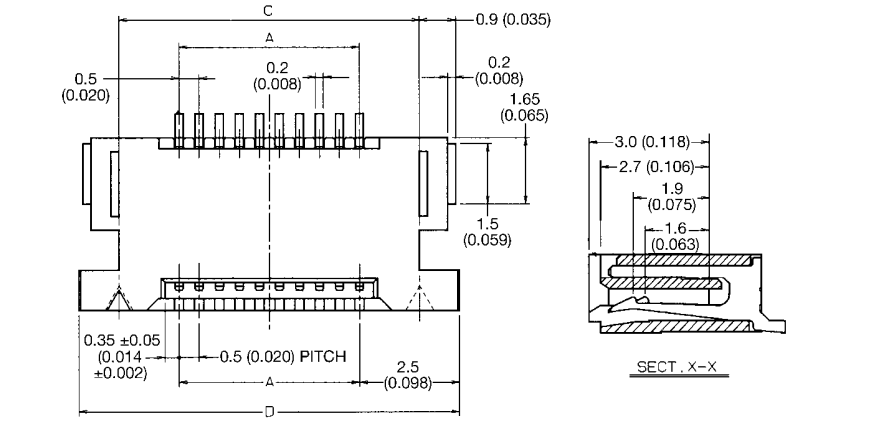

SECT. X-X

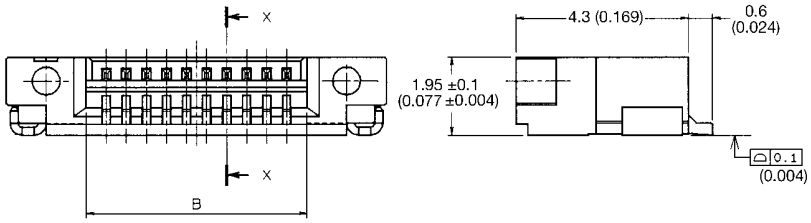

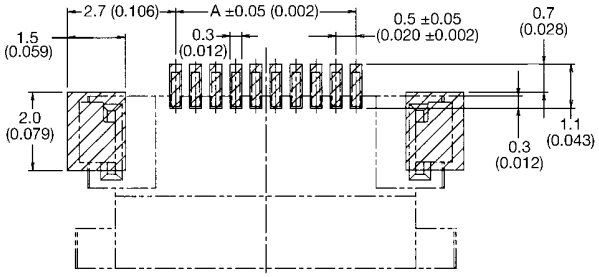

MOUNTING LAYOUT (CONN. MOUNTING SIDE)

Specifications

- Number of Contacts – 5-30
- 2000 Connectors per Tape & Reel
- Voltage – 50V
- Current Rating – 0.4 amp max.
- Dielectric Withstanding Voltage – 200V RMS min.
- Operating Temperature – (-40°C - +85°C)
- Contact Material – phosphor bronze (tin-lead plated)
- Insulator Material – PPS, natural color
- FFC/FPC Thickness – 0.3 ±0.05mm (0.012 ±0.002")
- Profile Height – 1.95mm

No. of Contacts	Dimension			
	A	B	C	D
05	2.0 (0.079)	3.0 (0.118)	5.0 (0.197)	7.0 (0.276)
06	2.5 (0.098)	3.5 (0.138)	5.5 (0.217)	7.5 (0.295)
07	3.0 (0.118)	4.0 (0.157)	6.0 (0.236)	8.0 (0.315)
08	3.5 (0.138)	4.5 (0.177)	6.5 (0.256)	8.5 (0.335)
09	4.0 (0.157)	5.0 (0.197)	7.0 (0.276)	9.0 (0.354)
10	4.5 (0.177)	5.5 (0.217)	7.5 (0.295)	9.5 (0.374)
11	5.0 (0.197)	6.0 (0.236)	8.0 (0.315)	10.0 (0.394)
12	5.5 (0.217)	6.5 (0.256)	8.5 (0.335)	10.5 (0.413)
13	6.0 (0.236)	7.0 (0.276)	9.0 (0.354)	11.0 (0.433)
14	6.5 (0.256)	7.5 (0.295)	9.5 (0.374)	11.5 (0.453)
15	7.0 (0.276)	8.0 (0.315)	10.0 (0.394)	12.0 (0.472)
16	7.5 (0.295)	8.5 (0.335)	10.5 (0.413)	12.5 (0.492)
17	8.0 (0.315)	9.0 (0.354)	11.0 (0.433)	13.0 (0.512)
18	8.5 (0.335)	9.5 (0.374)	11.5 (0.453)	13.5 (0.531)
19	9.0 (0.354)	10.0 (0.394)	12.0 (0.472)	14.0 (0.551)
20	9.5 (0.374)	10.5 (0.413)	12.5 (0.492)	14.5 (0.571)
21	10.0 (0.394)	11.0 (0.433)	13.0 (0.512)	15.0 (0.591)
22	10.5 (0.413)	11.5 (0.453)	13.5 (0.531)	15.5 (0.610)
23	11.0 (0.433)	12.0 (0.472)	14.0 (0.551)	16.0 (0.630)
24	11.5 (0.453)	12.5 (0.492)	14.5 (0.571)	16.5 (0.650)
25	12.0 (0.472)	13.0 (0.512)	15.0 (0.591)	17.0 (0.669)
26	12.5 (0.492)	13.5 (0.531)	15.5 (0.610)	17.5 (0.689)
27	13.0 (0.512)	14.0 (0.551)	16.0 (0.630)	18.0 (0.709)
28	13.5 (0.531)	14.5 (0.571)	16.5 (0.650)	18.5 (0.728)
29	14.0 (0.551)	15.0 (0.591)	17.0 (0.669)	19.0 (0.748)
30	14.5 (0.571)	15.5 (0.610)	17.5 (0.689)	19.5 (0.768)

	FFC		FPC	
	1	2	1	2
M	0.5±0.1	0.5±0.08	0.5±0.12	0.5±0.1
P	0.5±0.03	0.5±0.05	0.5±0.02	0.5±0.05
A	A±0.03	A±0.05	A±0.03	A±0.05
W	W±0.07	W±0.07	W±0.07	W±0.07
Wp	$0.3^{+0.05}_{-0.02}$	$0.3^{+0.05}_{-0.02}$	$0.35^{+0.04}_{-0.03}$	0.35+0.05

Applicable FFC, FPC

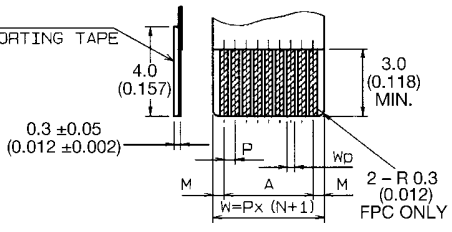

08 **6222** **0XX** **001** **800**

Number of Contacts

2000 Connectors per Tape and Reel.

0.50mm Pitch

Series 6222 - Tape and Reel Package

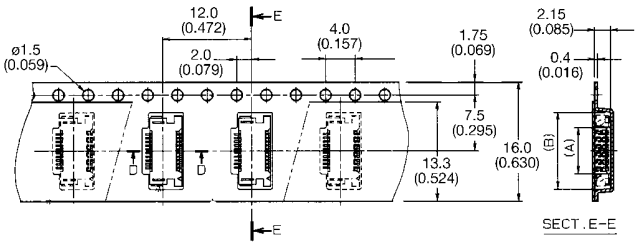

No. of Contacts	Dimension	
	A	B
05	3.2 (0.126)	7.3 (0.287)
06	3.7 (0.146)	7.8 (0.307)
07	4.2 (0.165)	8.3 (0.327)
08	4.7 (0.185)	8.8 (0.346)
09	5.2 (0.205)	9.3 (0.366)
10	5.7 (0.224)	9.8 (0.386)
11	6.2 (0.244)	10.3 (0.406)

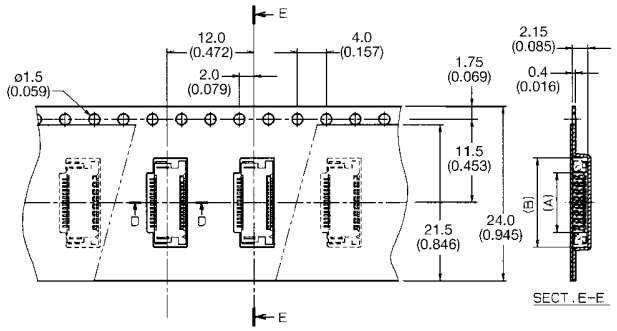

No. of Contacts	Dimension	
	A	B
12	6.7 (0.264)	10.8 (0.425)
13	7.2 (0.283)	11.3 (0.445)
14	7.7 (0.303)	11.8 (0.465)
15	8.2 (0.323)	12.3 (0.484)
16	8.7 (0.343)	12.8 (0.504)
17	9.2 (0.362)	13.3 (0.524)
18	9.7 (0.382)	13.8 (0.543)
19	10.2 (0.402)	14.3 (0.563)
20	10.7 (0.421)	14.8 (0.583)
21	11.2 (0.441)	15.3 (0.602)
22	11.7 (0.461)	15.8 (0.622)
23	12.2 (0.480)	16.3 (0.642)
24	12.7 (0.500)	16.8 (0.661)
25	13.2 (0.520)	17.3 (0.681)
26	13.7 (0.539)	17.8 (0.701)
27	14.2 (0.559)	18.3 (0.720)

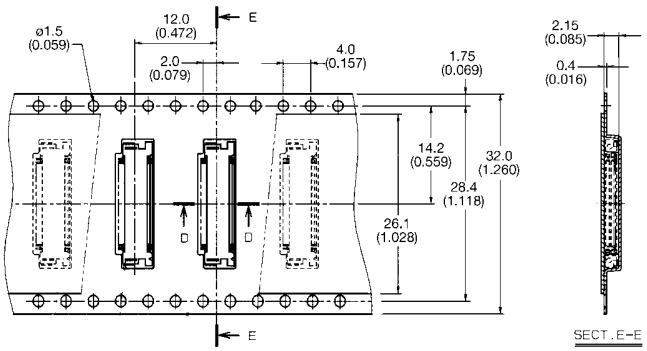

No. of Contacts	Dimension	
	A	B
28	14.7 (0.579)	18.8 (0.740)
29	15.2 (0.598)	19.3 (0.760)
30	15.7 (0.618)	19.8 (0.780)

HOW TO ORDER

08	6222	0XX	001	800

0XX: Number of Contacts

2000 Connectors per Tape and Reel.

0.50mm Pitch

Series 6223 - LIF Right Angle SMT (Top Contact Type)

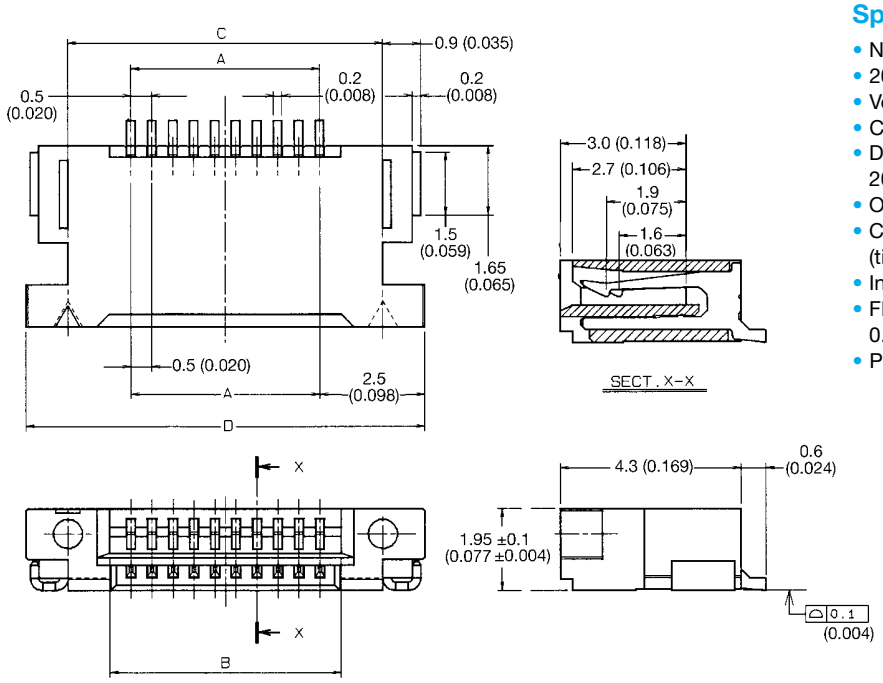

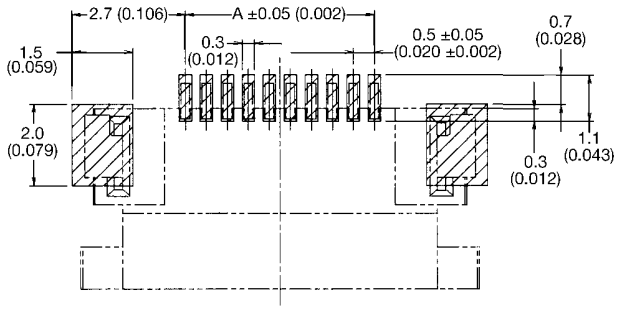

MOUNTING LAYOUT (CONN. MOUNTING SIDE)

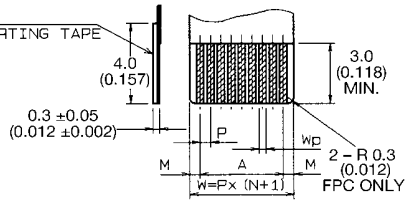

	FFC		FPC	
	1	2	1	2
M	0.5±0.1	0.5±0.08	0.5±0.12	0.5±0.1
P	0.5±0.03	0.5±0.05	0.5±0.02	0.5±0.05
A	A±0.03	A±0.05	A±0.03	A±0.05
W	W±0.07	W±0.07	W±0.07	W±0.07
Wp	$0.3^{+0.05}_{-0.02}$	$0.3^{+0.05}_{-0.02}$	$0.35^{+0.04}_{-0.03}$	$0.35^{+0.05}$

Applicable FFC, FPC

Specifications

- Number of Contacts – 5-30
- 2000 Connectors per Tape & Reel
- Voltage – 50V
- Current Rating – 0.4 amp max.
- Dielectric Withstanding Voltage – 200V RMS min.
- Operating Temperature – (-40°C - +85°C)
- Contact Material – phosphor bronze (tin-lead plated)
- Insulator Material – PPS, black color
- FFC/FPC Thickness – 0.3 ±0.05mm (0.012 ±0.002")
- Profile Height – 1.95mm

No. of Contacts	Dimension			
	A	B	C	D
05	2.0 (0.079)	3.0 (0.118)	5.0 (0.197)	7.0 (0.276)
06	2.5 (0.098)	3.5 (0.138)	5.5 (0.217)	7.5 (0.295)
07	3.0 (0.118)	4.0 (0.157)	6.0 (0.236)	8.0 (0.315)
08	3.5 (0.138)	4.5 (0.177)	6.5 (0.256)	8.5 (0.335)
09	4.0 (0.157)	5.0 (0.197)	7.0 (0.276)	9.0 (0.354)
10	4.5 (0.177)	5.5 (0.217)	7.5 (0.295)	9.5 (0.374)
11	5.0 (0.197)	6.0 (0.236)	8.0 (0.315)	10.0 (0.394)
12	5.5 (0.217)	6.5 (0.256)	8.5 (0.335)	10.5 (0.413)
13	6.0 (0.236)	7.0 (0.276)	9.0 (0.354)	11.0 (0.433)
14	6.5 (0.256)	7.5 (0.295)	9.5 (0.374)	11.5 (0.453)
15	7.0 (0.276)	8.0 (0.315)	10.0 (0.394)	12.0 (0.472)
16	7.5 (0.295)	8.5 (0.335)	10.5 (0.413)	12.5 (0.492)
17	8.0 (0.315)	9.0 (0.354)	11.0 (0.433)	13.0 (0.512)
18	8.5 (0.335)	9.5 (0.374)	11.5 (0.453)	13.5 (0.531)
19	9.0 (0.354)	10.0 (0.394)	12.0 (0.472)	14.0 (0.551)
20	9.5 (0.374)	10.5 (0.413)	12.5 (0.492)	14.5 (0.571)
21	10.0 (0.394)	11.0 (0.433)	13.0 (0.512)	15.0 (0.591)
22	10.5 (0.413)	11.5 (0.453)	13.5 (0.531)	15.5 (0.610)
23	11.0 (0.433)	12.0 (0.472)	14.0 (0.551)	16.0 (0.630)
24	11.5 (0.453)	12.5 (0.492)	14.5 (0.571)	16.5 (0.650)
25	12.0 (0.472)	13.0 (0.512)	15.0 (0.591)	17.0 (0.669)
26	12.5 (0.492)	13.5 (0.531)	15.5 (0.610)	17.5 (0.689)
27	13.0 (0.512)	14.0 (0.551)	16.0 (0.630)	18.0 (0.709)
28	13.5 (0.531)	14.5 (0.571)	16.5 (0.650)	18.5 (0.728)
29	14.0 (0.551)	15.0 (0.591)	17.0 (0.669)	19.0 (0.748)
30	14.5 (0.571)	15.5 (0.610)	17.5 (0.689)	19.5 (0.768)

08 **6223** **0XX** **001** **800**

Number of Contacts

2000 Connectors per Tape and Reel.

0.50mm Pitch

Series 6223 - Tape and Reel Package

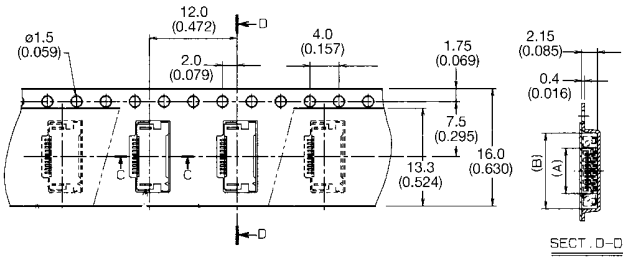

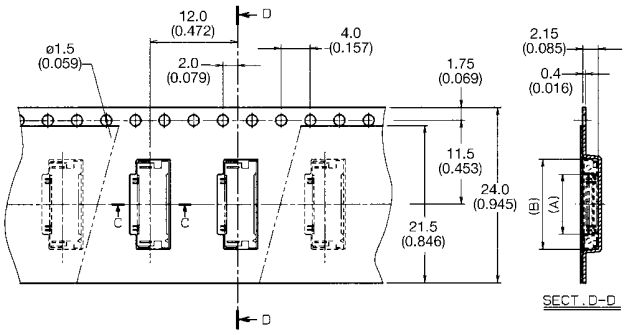

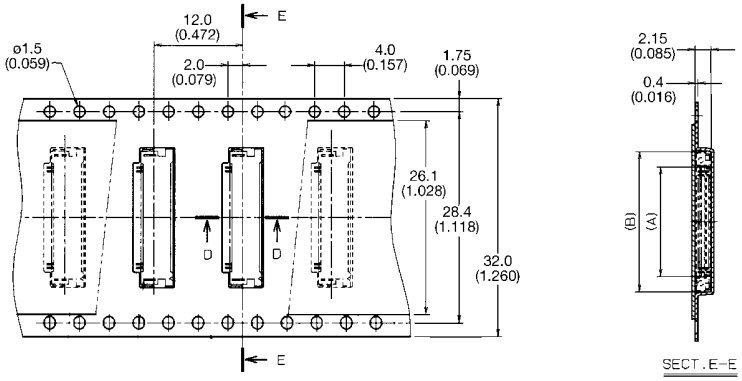

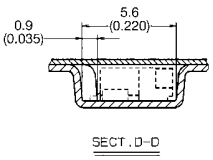

No. of Contacts	Dimension	
	A	B
05	3.2 (0.126)	7.3 (0.287)
06	3.7 (0.146)	7.8 (0.307)
07	4.2 (0.165)	8.3 (0.327)
08	4.7 (0.185)	8.8 (0.346)
09	5.2 (0.205)	9.3 (0.366)
10	5.7 (0.224)	9.8 (0.386)
11	6.2 (0244)	10.3 (0.406)

No. of Contacts	Dimension	
	A	B
12	6.7 (0.264)	10.8 (0.425)
13	7.2 (0.283)	11.3 (0.445)
14	7.7 (0.303)	11.8 (0.465)
15	8.2 (0.323)	12.3 (0.484)
16	8.7 (0.343)	12.8 (0.504)
17	9.2 (0.362)	13.3 (0.524)
18	9.7 (0.382)	13.8 (0.543)
19	10.2 (0.402)	14.3 (0.563)
20	10.7 (0.421)	14.8 (0.583)
21	11.2 (0.441)	15.3 (0.602)
22	11.7 (0.461)	15.8 (0.622)
23	12.2 (0.480)	16.3 (0.642)
24	12.7 (0.500)	16.8 (0.661)
25	13.2 (0.520)	17.3 (0.681)
26	13.7 (0.539)	17.8 (0.701)
27	14.2 (0.559)	18.3 (0.720)

No. of Contacts	Dimension	
	A	B
28	14.7 (0.579)	18.8 (0.740)
29	15.2 (0.598)	19.3 (0.760)
30	15.7 (0.618)	19.8 (0.780)

HOW TO ORDER

08	6223	0XX	001	800

0XX: Number of Contacts

2000 Connectors per Tape and Reel.

0.50mm Pitch

Series 6214 - ZIF Vertical SMT

Standard Slider

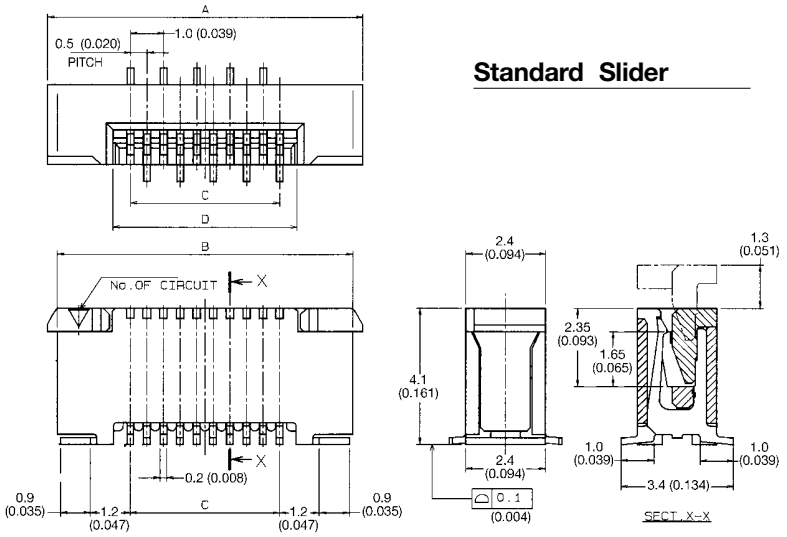

Extended Slider

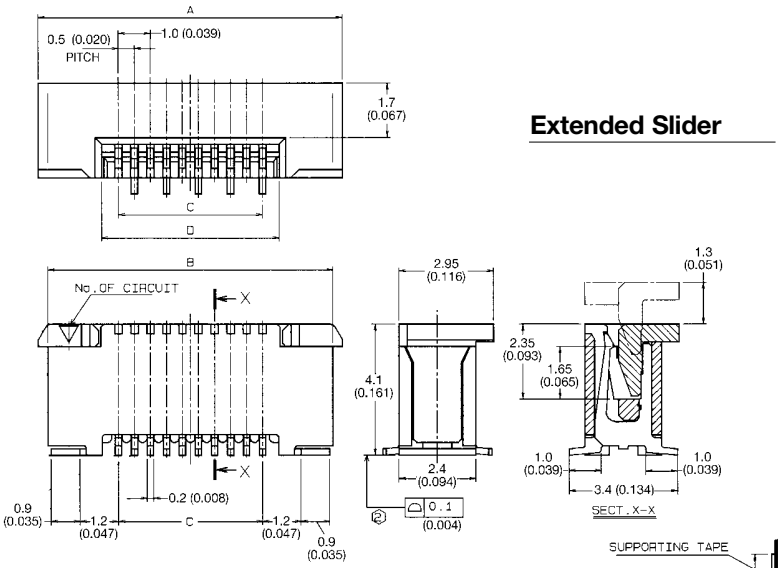

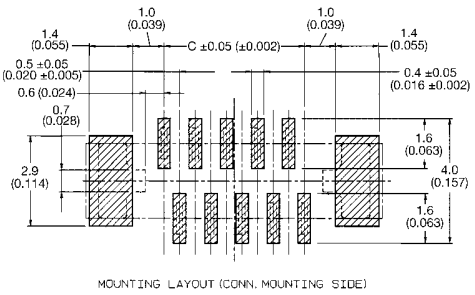

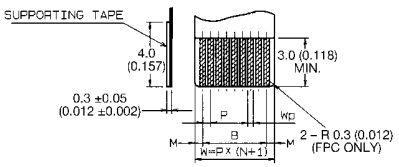

	FFC		FPC	
	1	2	1	2
M	0.5±0.1	0.5±0.08	0.5±0.12	0.5±0.1
P	0.5±0.03	0.5±0.05	0.5±0.02	0.5±0.05
B	B±0.03	B±0.05	B±0.03	B±0.05
W	W±0.07	W±0.07	W±0.07	W±0.07
Wp	$0.3^{+0.05}_{-0.02}$	$0.3^{+0.05}_{-0.02}$	$0.35^{+0.04}_{-0.03}$	$0.35^{+0.05}$

Applicable FFC, FPC

Specifications

- Number of Contacts – 6-30
- 1000 Connectors per Tape & Reel
- Voltage – 50V
- Current Rating – 0.4 amp max.
- Dielectric Withstanding Voltage – 200V RMS min.
- Operating Temperature – (-40°C - +85°C)
- Contact Material – phosphor bronze (tin-lead plated)
- Insulator Material – nylon 46, natural color (UL 94 V-O)
- Slider Material – PPS, natural color (UL 94 V-O)
- FFC/FPC Thickness – 0.3 ±0.05mm (0.012 ±0.002")
- Profile Height – 4.10mm

No. of Contacts	Dimension			
	A	B	C	D
06	7.5 (0.295)	6.9 (0.272)	2.5 (0.098)	3.6 (0.142)
07	8.0 (0.315)	7.4 (0.291)	3.0 (0.118)	4.1 (0.161)
08	8.5 (0.335)	7.9 (0.311)	3.5 (0.138)	4.6 (0.181)
09	9.0 (0.354)	8.4 (0.331)	4.0 (0.157)	5.1 (0.201)
10	9.5 (0.374)	8.9 (0.350)	4.5 (0.177)	5.6 (0.220)
11	10.0 (0.394)	9.4 (0.370)	5.0 (0.197)	6.1 (0.240)
12	10.5 (0.413)	9.9 (0.390)	5.5 (0.217)	6.6 (0.260)
13	11.0 (0.433)	10.4 (0.409)	6.0 (0.236)	7.1 (0.280)
14	11.5 (0.453)	10.9 (0.429)	6.5 (0.256)	7.6 (0.299)
15	12.0 (0.472)	11.4 (0.449)	7.0 (0.276)	8.1 (0.319)
16	12.5 (0.492)	11.9 (0.469)	7.5 (0.295)	8.6 (0.339)
17	13.0 (0.512)	12.4 (0.488)	8.0 (0.315)	9.1 (0.358)
18	13.5 (0.531)	12.9 (0.508)	8.5 (0.335)	9.6 (0.378)
19	14.0 (0.551)	13.4 (0.528)	9.0 (0.354)	10.1 (0.398)
20	14.5 (0.571)	13.9 (0.547)	9.5 (0.374)	10.6 (0.417)
21	15.0 (0.591)	14.4 (0.567)	10.0 (0.394)	11.1 (0.437)
22	15.5 (0.610)	14.9 (0.587)	10.5 (0.413)	11.6 (0.457)
23	16.0 (0.630)	15.4 (0.606)	11.0 (0.433)	12.1 (0.476)
24	16.5 (0.650)	15.9 (0.626)	11.5 (0.453)	12.6 (0.496)
25	17.0 (0.669)	16.4 (0.646)	12.0 (0.472)	13.1 (0.516)
26	17.5 (0.689)	16.9 (0.665)	12.5 (0.492)	13.6 (0.535)
27	18.0 (0.709)	17.4 (0.685)	13.0 (0.512)	14.1 (0.555)
28	18.5 (0.728)	17.9 (0.705)	13.5 (0.531)	14.6 (0.575)
29	19.0 (0.748)	18.4 (0.724)	14.0 (0.551)	15.1 (0.594)
30	19.5 (0.768)	18.9 (0.744)	14.5 (0.571)	15.6 (0.614)

HOW TO ORDER

04 **6214** **0XX** **XXX** **800**

Number of Contacts

Variation Code
000 = Standard slider
010 = Extended slider

1000 Connectors per Tape and Reel.

0.50mm Pitch

Series 6214 - Tape and Reel Package

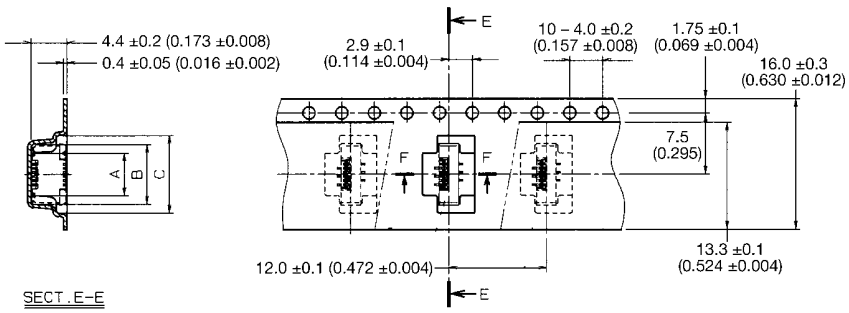

No. of Contacts		A	B	C
06	04 6214 006 XXX 800	5.2 (0.205)	7.3 (0.287)	9.5 (0.374)
07	04 6214 007 XXX 800	5.7 (0.224)	7.8 (0.307)	10.0 (0.394)
08	04 6214 008 XXX 800	6.2 (0.244)	8.3 (0.327)	10.5 (0.413)

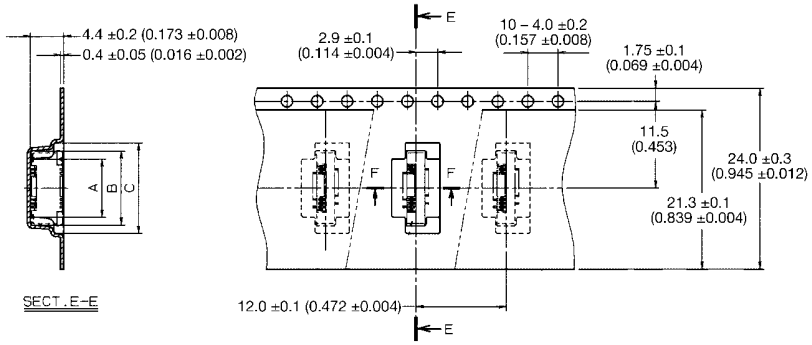

No. of Contacts		A	B	C
09	04 6214 009 XXX 800	6.7 (0.264)	8.8 (0.346)	11.0 (0.433)
10	010	7.2 (0.283)	9.3 (0.366)	11.5 (0.453)
11	011	7.7 (0.303)	9.8 (0.386)	12.0 (0.472)
12	012	8.2 (0.323)	10.3 (0.406)	12.5 (0.492)
13	013	8.7 (0.343)	10.8 (0.425)	13.0 (0.512)
14	014	9.2 (0.362)	11.3 (0.445)	13.5 (0.531)
15	015	9.7 (0.382)	11.8 (0.465)	14.0 (0.551)
16	016	10.2 (0.402)	12.3 (0.484)	14.5 (0.571)
17	017	10.7 (0.421)	12.8 (0.504)	15.0 (0.591)
18	018	11.2 (0.441)	13.3 (0.524)	15.5 (0.610)
19	019	11.7 (0.461)	13.8 (0.543)	16.0 (0.630)
20	020	12.2 (0.480)	14.3 (0.563)	16.5 (0.650)
21	021	12.7 (0.500)	14.8 (0.583)	17.0 (0.669)
22	022	13.2 (0.520)	15.3 (0.602)	17.5 (0.689)
23	023	13.7 (0.539)	15.8 (0.622)	18.0 (0.709)
24	04 6214 024 XXX 800	14.2 (0.559)	16.3 (0.642)	18.5 (0.728)

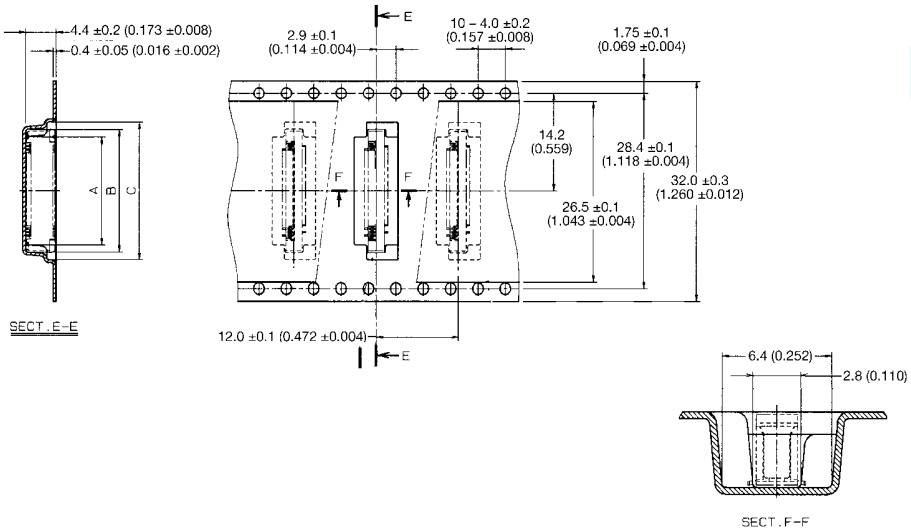

No. of Contacts		A	B	C
25	04 6214 025 XXX 800	14.7 (0.579)	16.8 (0.661)	19.0 (0.748)
26	026	15.2 (0.598)	17.3 (0.681)	19.5 (0.768)
27	027	15.7 (0.618)	17.8 (0.701)	20.0 (0.787)
28	028	16.2 (0.638)	18.3 (0.720)	20.5 (0.807)
29	029	16.7 (0.658)	18.8 (0.740)	21.0 (0.827)
30	04 6214 030 XXX 800	17.2 (0.677)	19.3 (0.760)	21.5 (0.846)

HOW TO ORDER

04	6214	0XX	XXX	800
		Number of Contacts	Variation Code	

Variation Code
000 = Standard slider
010 = Extended slider

1000 Connectors per Tape and Reel.

0.50mm Pitch

Series 6274 - ZIF Vertical SMT

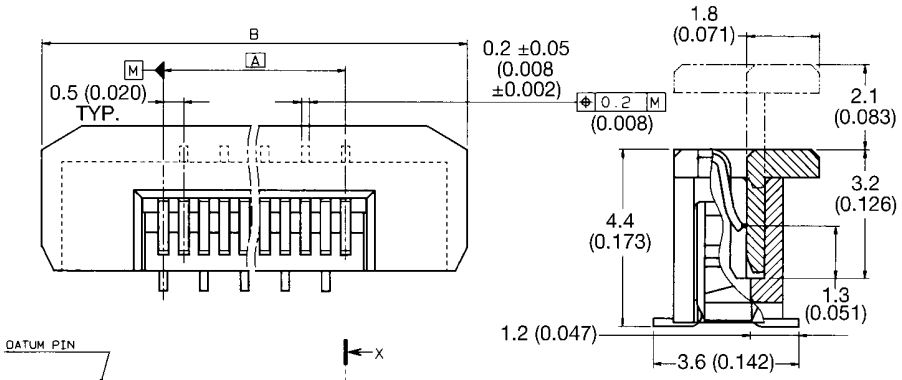

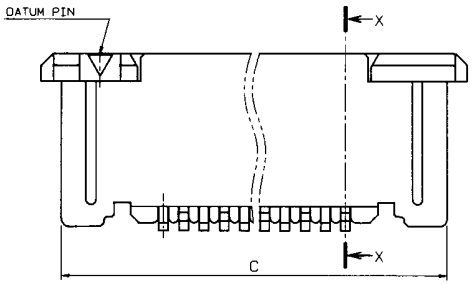

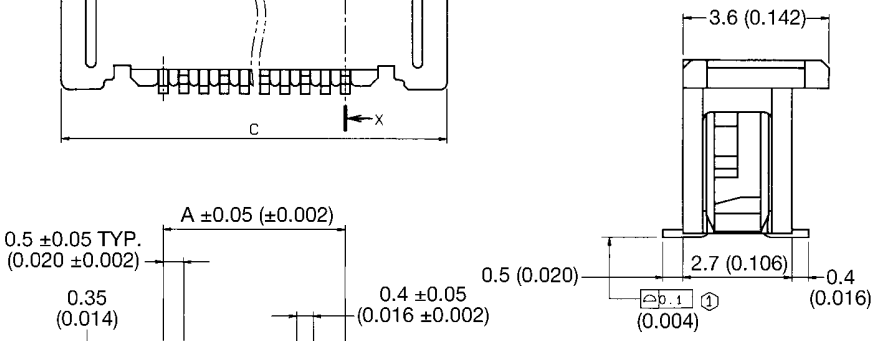

MOUNTING LAYOUT (CONN. MOUNTING SIDE)

	FFC		FPC	
	1	2	1	2
M	0.5±0.1	0.5±0.08	0.5±0.12	0.5±0.1
P	0.5±0.03	0.5±0.05	0.5±0.02	0.5±0.05
A	A±0.03	A±0.05	A±0.03	A±0.05
W	W±0.07	W±0.07	W±0.07	W±0.07
Wp	$0.3^{+0.05}_{-0.02}$	$0.3^{+0.05}_{-0.02}$	$0.35^{+0.04}_{-0.03}$	$0.35^{+0.05}$

Applicable FFC, FPC

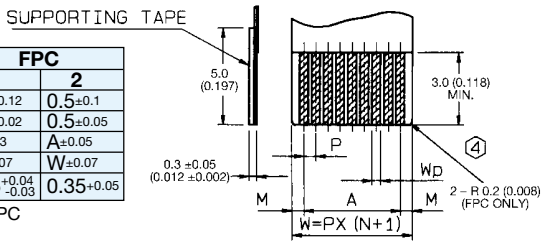

Specifications

- Number of Contacts – 31-50
- 1000 Connectors per Tape & Reel
- Voltage – 50V
- Current Rating – 0.4 amp max.
- Dielectric Withstanding Voltage – 200V RMS min.
- Operating Temperature – (-25°C - +85°C)
- Contact Material – phosphor bronze (tin-lead plated)
- Insulator Material – PPS, brown color
- Slider Material – PPS, black color
- FFC/FPC Thickness – 0.3 ±0.05mm (0.012 ±0.002")
- Profile Height – 4.40mm

No. of Contacts	Dimension		
	A	B	C
31	15.0 (0.591)	21.0 (0.827)	20.0 (0.787)
32	15.5 (0.610)	21.5 (0.846)	20.5 (0.807)
33	16.0 (0.630)	22.0 (0.866)	21.0 (0.827)
34	16.5 (0.650)	22.5 (0.886)	21.5 (0.846)
35	17.0 (0.669)	23.0 (0.906)	22.0 (0.866)
36	17.5 (0.689)	23.5 (0.925)	22.5 (0.886)
37	18.0 (0.709)	24.0 (0.945)	23.0 (0.906)
38	18.5 (0.728)	24.5 (0.965)	23.5 (0.925)
39	19.0 (0.748)	25.0 (0.984)	24.0 (0.945)
40	19.5 (0.768)	25.5 (1.004)	24.5 (0.965)
41	20.0 (0.787)	26.0 (1.024)	25.0 (0.984)
42	20.5 (0.807)	26.5 (1.043)	25.5 (1.004)
43	21.0 (0.827)	27.0 (1.063)	26.0 (1.024)
44	21.5 (0.846)	27.5 (1.083)	26.5 (1.043)
45	22.0 (0.866)	28.0 (1.102)	27.0 (1.063)
46	22.5 (0.886)	28.5 (1.122)	27.5 (1.083)
47	23.0 (0.906)	29.0 (1.142)	28.0 (1.102)
48	23.5 (0.925)	29.5 (1.161)	28.5 (1.122)
49	24.0 (0.945)	30.0 (1.181)	29.0 (1.142)
50	24.5 (0.965)	30.5 (1.201)	29.5 (1.161)

HOW TO ORDER

04	6274	0XX	000	800

Number of Contacts

1000 Connectors per Tape and Reel.

ELCO

0.50mm Pitch

Series 6274 - Tape and Reel Package

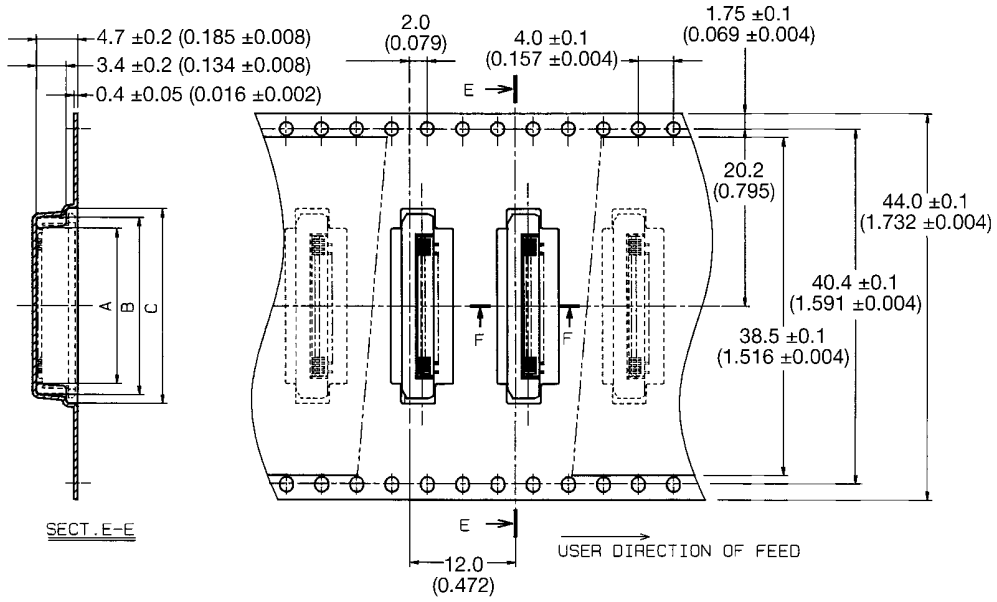

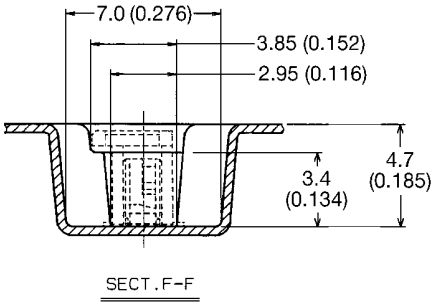

No. of Contacts	Dimension		
	A	B	C
31	17.7 (0.697)	20.2 (0.795)	22.2 (0.874)
32	18.2 (0.717)	20.7 (0.815)	22.7 (0.894)
33	18.7 (0.736)	21.2 (0.835)	23.2 (0.913)
34	19.2 (0.756)	21.7 (0.854)	23.7 (0.933)
35	19.7 (0.776)	22.2 (0.874)	24.2 (0.953)
36	20.2 (0.795)	22.7 (0.894)	24.7 (0.972)
37	20.7 (0.815)	23.2 (0.913)	25.2 (0.992)
38	21.2 (0.835)	23.7 (0.933)	25.7 (1.012)
39	21.7 (0.854)	24.2 (0.953)	26.2 (1.031)
40	22.2 (0.874)	24.7 (0.972)	26.7 (1.051)
41	22.7 (0.894)	25.2 (0.992)	27.2 (1.071)
42	23.2 (0.913)	25.7 (1.012)	27.7 (1.091)
43	23.7 (0.933)	26.2 (1.031)	28.2 (1.110)
44	24.2 (0.953)	26.7 (1.051)	28.7 (1.130)
45	24.7 (0.972)	27.2 (1.071)	29.2 (1.150)
46	25.2 (0.992)	27.7 (1.091)	29.7 (1.169)
47	25.7 (1.012)	28.2 (1.110)	30.2 (1.189)
48	26.2 (1.031)	28.7 (1.130)	30.7 (1.209)
49	26.7 (1.051)	29.2 (1.150)	31.2 (1.228)
50	27.2 (1.071)	29.7 (1.169)	31.7 (1.248)

HOW TO ORDER

04	6274	0XX	000	800
		Number of Contacts		

1000 Connectors per Tape and Reel.

0.50mm Pitch

Series 6244 - LIF Vertical SMT

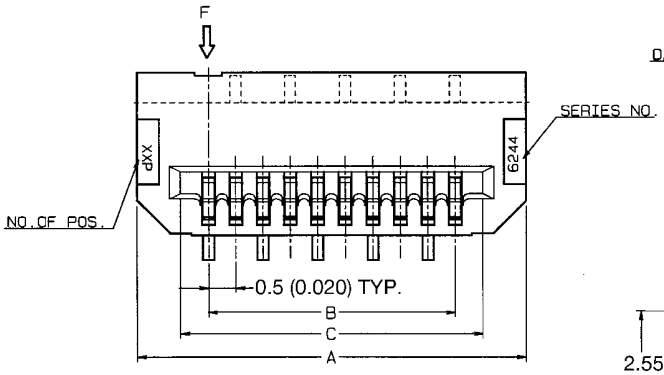

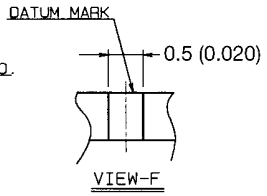

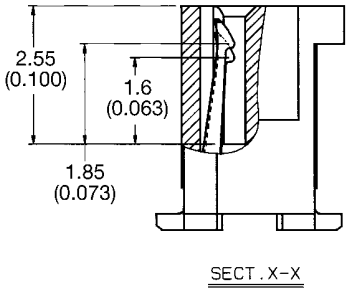

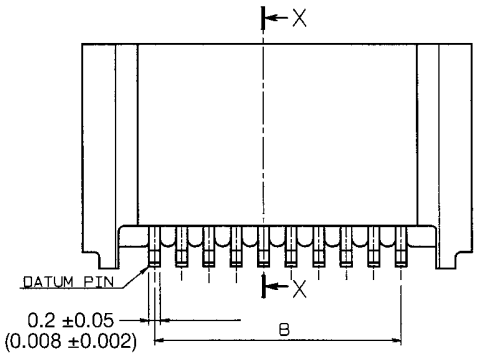

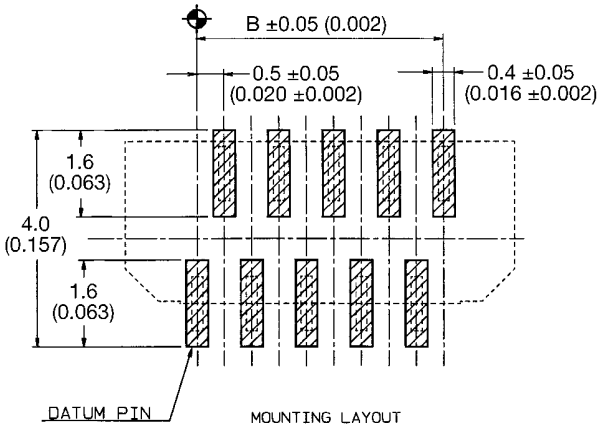

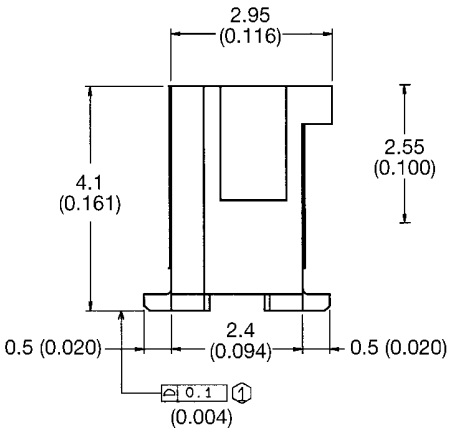

	FFC		FPC	
	1	2	1	2
M	0.5±0.1	0.5±0.08	0.5±0.12	0.5±0.1
P	0.5±0.03	0.5±0.05	0.5±0.02	0.5±0.05
B	B±0.03	B±0.05	B±0.03	B±0.05
W	W±0.07	W±0.07	W±0.07	W±0.07
Wp	$0.3^{+0.05}_{-0.02}$	$0.3^{+0.05}_{-0.02}$	$0.35^{+0.04}_{-0.03}$	$0.35^{+0.05}$

Applicable FFC, FPC

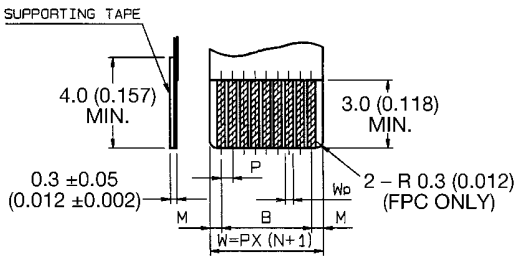

Specifications

- Number of Contacts – 6-30
- 1500 Connectors per Tape & Reel
- Voltage – 50V
- Current Rating – 0.4 amp max.
- Dielectric Withstanding Voltage – 200V RMS min.
- Operating Temperature – (-40°C - +85°C)
- Contact Material – phosphor bronze (tin-lead plated)
- Insulator Material – nylon 46, natural color (UL 94 V-O)
- FFC/FPC Thickness – 0.3 ±0.05mm (0.012 ±0.002")
- Profile Height – 4.10mm

No. of Contacts	Dimension		
	A	B	C
06	5.1 (0.201)	2.5 (0.098)	3.6 (0.142)
07	5.6 (0.220)	3.0 (0.118)	4.1 (0.161)
08	6.1 (0.240)	3.5 (0.138)	4.6 (0.181)
09	6.6 (0.260)	4.0 (0.157)	5.1 (0.201)
10	7.1 (0.280)	4.5 (0.177)	5.6 (0.220)
11	7.6 (0.299)	5.0 (0.197)	6.1 (0.240)
12	8.1 (0.319)	5.5 (0.217)	6.6 (0.260)
13	8.6 (0.339)	6.0 (0.236)	7.1 (0.280)
14	9.1 (0.358)	6.5 (0.256)	7.6 (0.299)
15	9.6 (0.378)	7.0 (0.276)	8.1 (0.319)
16	10.1 (0.398)	7.5 (0.295)	8.6 (0.339)
17	10.6 (0.417)	8.0 (0.315)	9.1 (0.358)
18	11.1 (0.437)	8.5 (0.335)	9.6 (0.378)
19	11.6 (0.457)	9.0 (0.354)	10.1 (0.398)
20	12.1 (0.476)	9.5 (0.374)	10.6 (0.417)
21	12.6 (0.496)	10.0 (0.394)	11.1 (0.437)
22	13.1 (0.516)	10.5 (0.413)	11.6 (0.457)
23	13.6 (0.535)	11.0 (0.433)	12.1 (0.476)
24	14.1 (0.555)	11.5 (0.453)	12.6 (0.496)
25	14.6 (0.575)	12.0 (0.472)	13.1 (0.516)
26	15.1 (0.594)	12.5 (0.492)	13.6 (0.535)
27	15.6 (0.614)	13.0 (0.512)	14.1 (0.555)
28	16.1 (0.634)	13.5 (0.531)	14.6 (0.575)
29	16.6 (0.654)	14.0 (0.551)	15.1 (0.594)
30	17.1 (0.673)	14.5 (0.571)	15.6 (0.614)

HOW TO ORDER

04	6244	0XX	011	800
		Number of Contacts		1500 Connectors per Tape and Reel.

0.50mm Pitch

Series 6244 - Tape and Reel Package

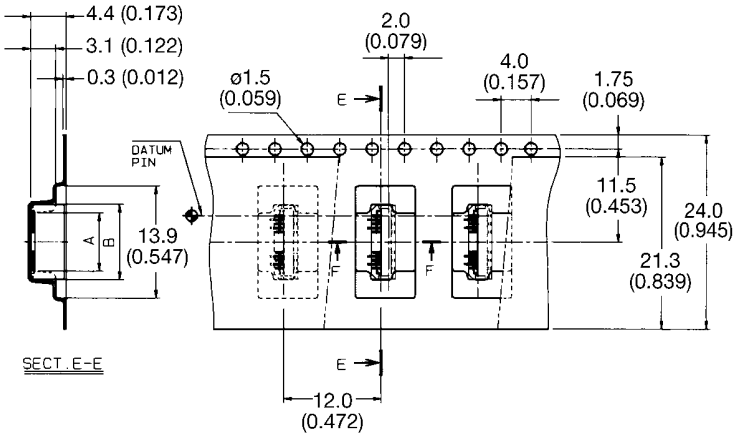

No. of Contacts	Dimension A	Dimension B
06	3.2 (0.126)	5.3 (0.209)
07	3.7 (0.146)	5.8 (0.228)
08	4.2 (0.165)	6.3 (0.248)
09	4.7 (0.185)	6.8 (0.268)
10	5.2 (0.205)	7.3 (0.287)
11	5.7 (0.224)	7.8 (0.307)
12	6.2 (0.244)	8.3 (0.327)
13	6.7 (0.264)	8.8 (0.346)
14	7.2 (0.283)	9.3 (0.366)
15	7.7 (0.303)	9.8 (0.386)
16	8.2 (0.323)	10.3 (0.406)
17	8.7 (0.343)	10.8 (0.425)
18	9.2 (0.362)	11.3 (0.445)
19	9.7 (0.382)	11.8 (0.465)

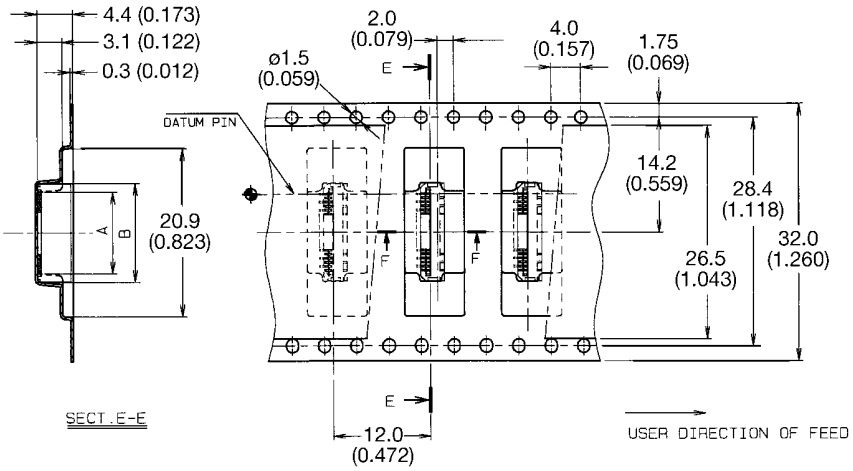

No. of Contacts	Dimension A	Dimension B
20	10.2 (0.402)	12.3 (0.484)
21	10.7 (0.421)	12.8 (0.504)
22	11.2 (0.441)	13.3 (0.524)
23	11.7 (0.461)	13.8 (0.543)
24	12.2 (0.480)	14.3 (0.563)
25	12.7 (0.500)	14.8 (0.583)
26	13.2 (0.520)	15.3 (0.602)
27	13.7 (0.539)	15.8 (0.622)
28	14.2 (0.559)	16.3 (0.642)
29	14.7 (0.579)	16.8 (0.661)
30	15.2 (0.598)	17.3 (0.681)

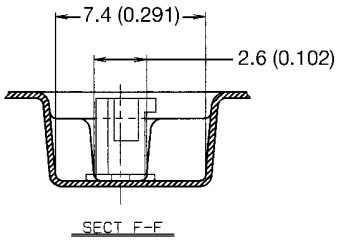

HOW TO ORDER

04	6244	0XX	011	800

0XX: Number of Contacts

1500 Connectors per Tape and Reel.

0.50mm Pitch
Series 6266 - LIF Vertical SMT
(Dual Sided Contact Type) 3.50mm Profile Height

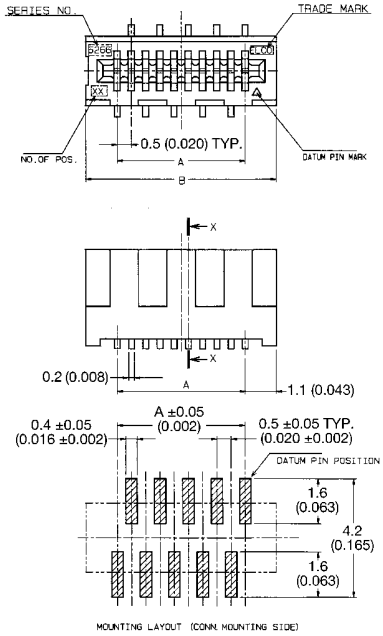

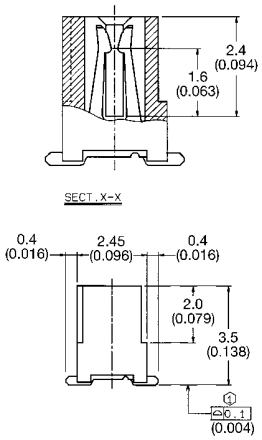

Specifications

- Number of Contacts – 5-20
- 1000 Connectors per Tape & Reel
- Voltage – 50V
- Current Rating – 0.4 amp max.
- Dielectric Withstanding Voltage – 200V RMS min.
- Operating Temperature – (-20°C - +85°C)
- Contact Material – phosphor bronze (tin-lead plated)
- Insulator Material – nylon 46, natural color (UL 94 V-O)
- FFC/FPC Thickness – 0.3 ±0.05mm (0.012 ±0.002")
- Profile Height – 3.50mm

No. of Contacts	Dimension A	Dimension B
05	2.0 (0.079)	4.2 (0.165)
06	2.5 (0.098)	4.7 (0.185)
07	3.0 (0.118)	5.2 (0.205)
08	3.5 (0.138)	5.7 (0.224)
09	4.0 (0.157)	6.2 (0.244)
10	4.5 (0.177)	6.7 (0.264)
11	5.0 (0.197)	7.2 (0.283)
12	5.5 (0.217)	7.7 (0.303)
13	6.0 (0.236)	8.2 (0.323)
14	6.5 (0.256)	8.7 (0.343)
15	7.0 (0.276)	9.2 (0.362)
16	7.5 (0.295)	9.7 (0.382)
17	8.0 (0.315)	10.2 (0.402)
18	8.5 (0.335)	10.7 (0.421)
19	9.0 (0.354)	11.2 (0.441)
20	9.5 (0.374)	11.7 (0.461)

	FFC		FPC	
	1	2	1	2
M	0.5±0.1	0.5±0.08	0.5±0.12	0.5±0.1
P	0.5±0.03	0.5±0.05	0.5±0.02	0.5±0.05
A	A±0.03	A±0.05	A±0.03	A±0.05
W	W±0.07	W±0.07	W±0.07	W±0.07
Wp	$0.3^{+0.05}_{-0.02}$	$0.3^{+0.05}_{-0.02}$	$0.35^{+0.04}_{-0.03}$	$0.35^{+0.05}$

Applicable FFC, FPC

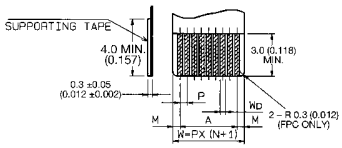

HOW TO ORDER

04 **6266** **0XX** **001** **800**

Number of Contacts

ONE SIDE LEAD TYPE

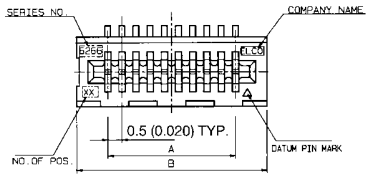

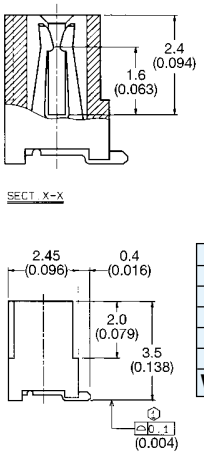

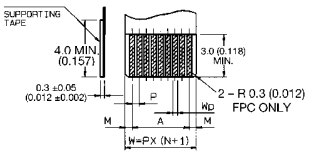

No. of Contacts	Dimension A	Dimension B
11	5.0 (0.197)	7.2 (0.283)
13	6.0 (0.236)	8.2 (0.323)

	FFC		FPC	
	1	2	1	2
M	0.5±0.1	0.5±0.08	0.5±0.12	0.5±0.1
P	0.5±0.03	0.5±0.05	0.5±0.02	0.5±0.05
A	A±0.03	A±0.05	A±0.03	A±0.05
W	W±0.07	W±0.07	W±0.07	W±0.07
Wp	$0.3^{+0.05}_{-0.02}$	$0.3^{+0.05}_{-0.02}$	$0.35^{+0.04}_{-0.03}$	$0.35^{+0.05}$

Applicable FFC, FPC

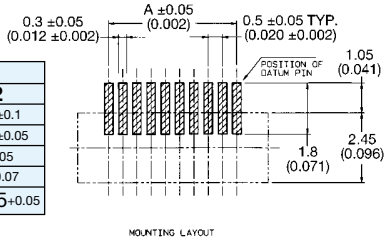

HOW TO ORDER

04 **6266** **0XX** **011** **800**

Number of Contacts

1000 Connectors per Tape and Reel.

0.50mm Pitch

Series 6266 - Tape and Reel Package

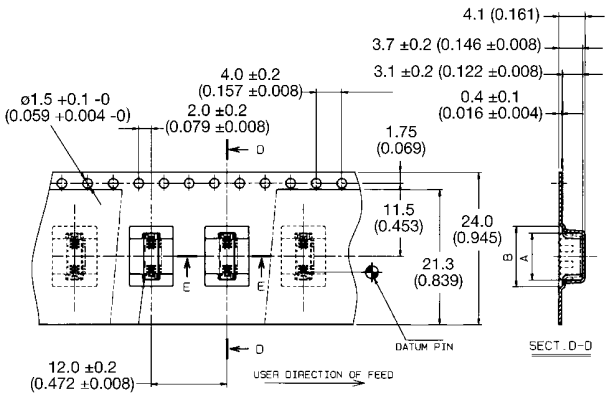

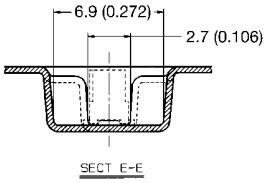

No. of Contacts	Dimension	
	A	B
05	4.4 (0.173)	6.5 (0.256)
06	4.9 (0.193)	7.0 (0.276)
07	5.4 (0.213)	7.5 (0.295)
08	5.9 (0.232)	8.0 (0.315)
09	6.4 (0.252)	8.5 (0.335)
10	6.9 (0.272)	9.0 (0.354)
11	7.4 (0.291)	9.5 (0.374)
12	7.9 (0.311)	10.0 (0.394)
13	8.4 (0.331)	10.5 (0.413)
14	8.9 (0.350)	11.0 (0.433)
15	9.4 (0.370)	11.5 (0.453)
16	9.9 (0.390)	12.0 (0.472)
17	10.4 (0.409)	12.5 (0.492)
18	10.9 (0.429)	13.0 (0.512)
19	11.4 (0.449)	13.5 (0.531)
20	11.9 (0.469)	14.0 (0.551)

HOW TO ORDER

04	6266	0XX	001	800

Number of Contacts

ONE SIDE LEAD TYPE

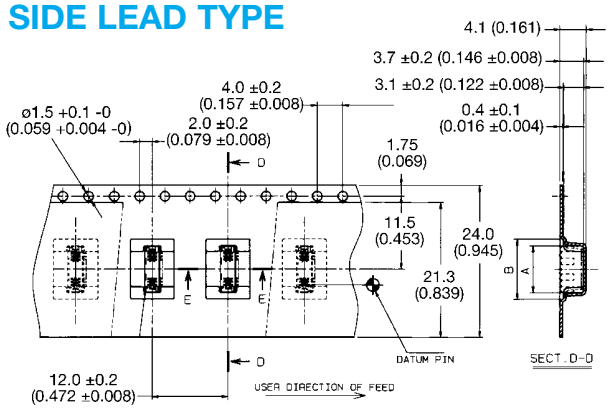

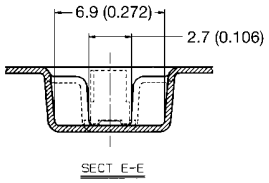

No. of Contacts	Dimension	
	A	B
11	7.4 (0.291)	9.5 (0.374)
13	8.4 (0.331)	10.5 (0.413)

HOW TO ORDER

04	6266	0XX	011	800

Number of Contacts

1000 Connectors per Tape and Reel.

0.80mm Pitch

Product Selector Guide

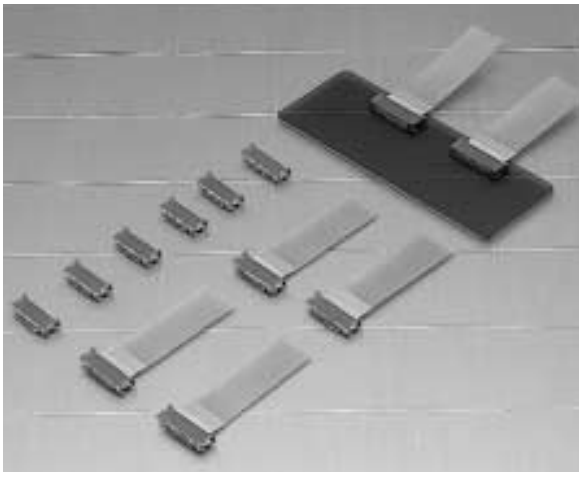

SMT	ST (Vertical)	ZIF	
		NON-ZIF (LIF)	6218
	RA (Right Angle)	ZIF	
		NON-ZIF (LIF)	6206
DIP (Through Hole)	ST (Vertical)	ZIF	
		NON-ZIF (LIF)	
	RA (Right Angle)	ZIF	
		NON-ZIF (LIF)	
	Bottom Entry	NON-ZIF (LIF)	
	Direct	–	

millimeters (inches)

Series	6218	6206	
Type	NON-ZIF (LIF) ST SMT	NON-ZIF (LIF) RA SMT	
Contact	Dual	Dual	
Profile Height in mm	3.50 (0.138)	2.00 (0.079)	
Number of Contacts	10	4-20	
Current Rating	0.5A Max.	0.5A Max.	
Voltage Rating	50V Max.	50V Max.	
Dielectric Withstanding Voltage	500Vrms	500Vrms	
Contact Material	Phosphor bronze, Tin-Plated		
Insulator Material	Glass-filled Nylon	Glass-filled PPS	
Operating Temperature	-40ºC~+85ºC	-40ºC~+85ºC	
FFC/FPC Thickness	0.3±0.05 (0.012±0.002)	0.3±0.05 (0.012±0.002)	
Page	40	41-42	

0.80mm Pitch

Series 6218 - LIF Vertical SMT Dual Type

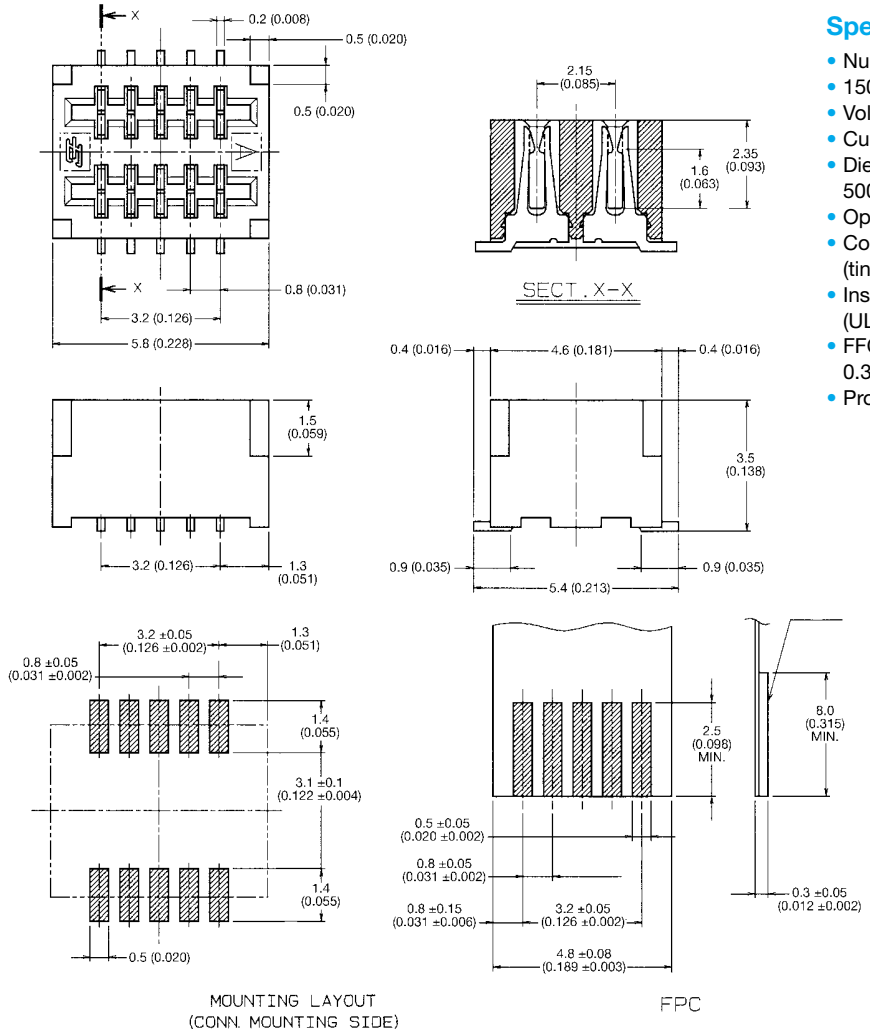

Specifications

- Number of Contacts – 10
- 1500 Connectors per Tape & Reel
- Voltage – 50V
- Current Rating – 0.5 amp max.
- Dielectric Withstanding Voltage – 500V RMS min.
- Operating Temperature – (-25°C - +85°C)
- Contact Material – phosphor bronze (tin-lead plated)
- Insulator Material – nylon 46, natural color (UL 94 V-O)
- FFC/FPC Thickness – 0.3 ±0.05 mm (0.012 ±0.002")
- Profile Height – 3.50mm (0.138")

TAPE AND REEL PACKAGE

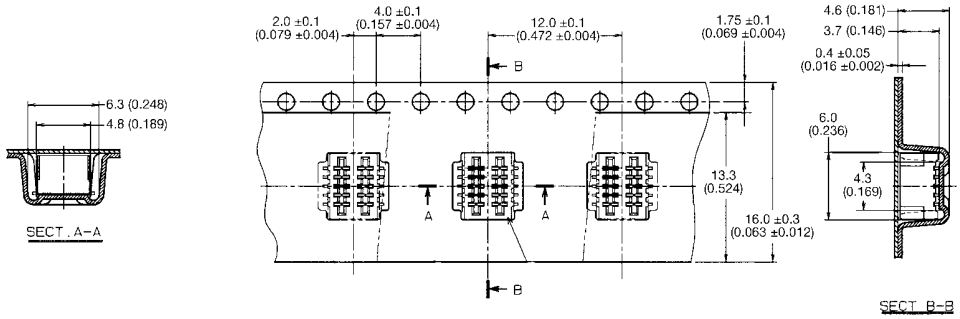

HOW TO ORDER

04	6218	010	000	800

Number of Contacts

1500 Connectors per Tape and Reel.

0.80mm Pitch

Series 6206 - LIF Right Angle SMT (Dual Sided Contact Type)

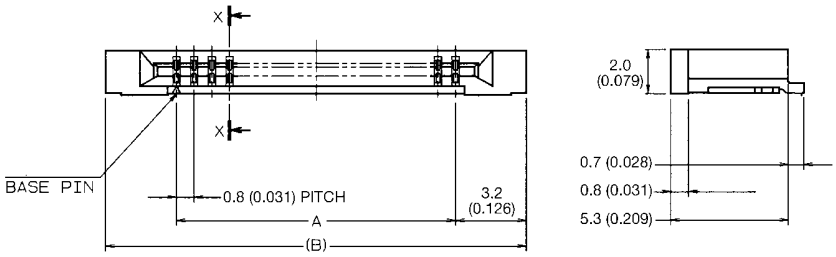

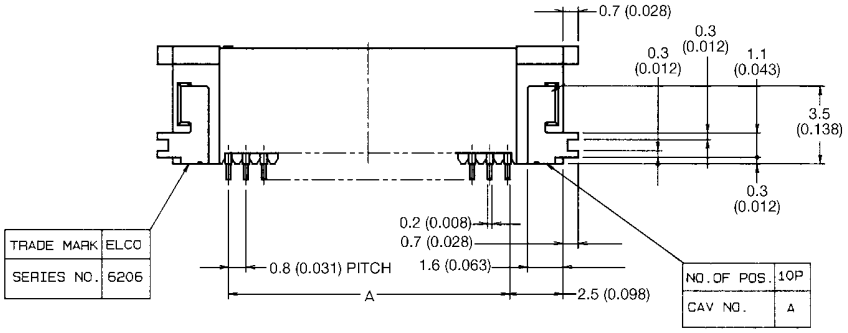

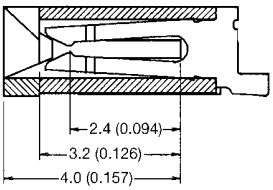

SECT X–X

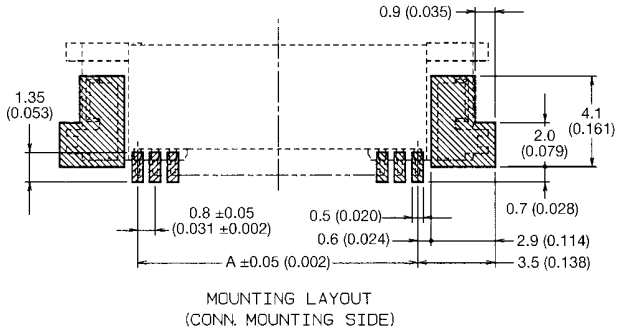

MOUNTING LAYOUT
(CONN. MOUNTING SIDE)

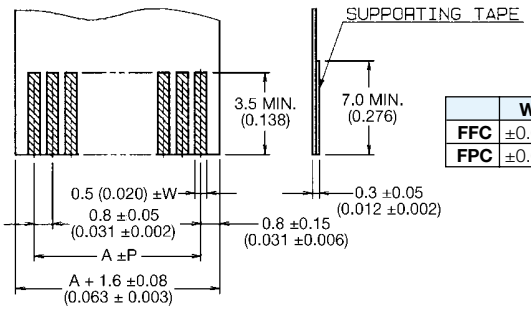

FFC/FPC
RECOMMENDED APPLICABLE FPC LAYOUT

	W	P
FFC	±0.03	±0.06
FPC	±0.05	±0.05

Specifications

- Number of Contacts – 4-20
- 1000 Connectors per Tape & Reel
- Voltage – 50V
- Current Rating – 0.5 amp max.
- Dielectric Withstanding Voltage – 500V RMS min.
- Operating Temperature – (-25°C - +85°C)
- Contact & Metal Tab Material – phosphor bronze (tin-lead plated)
- Insulator Material – PPS, natural color (UL 94 V-O)
- FFC/FPC Thickness – 0.3 ±0.05mm (0.012 ±0.002")
- Profile Height – 2.00mm (0.079")

No. of Contacts	Dimension A	Dimension B
04	2.4 (0.094)	8.8 (0.346)
05	3.2 (0.126)	9.6 (0.378)
06	4.0 (0.157)	10.4 (0.409)
07	4.8 (0.189)	11.2 (0.441)
08	5.6 (0.220)	12.0 (0.472)
09	6.4 (0.252)	12.8 (0.504)
10	7.2 (0.283)	13.6 (0.535)
11	8.0 (0.315)	14.4 (0.567)
12	8.8 (0.346)	15.2 (0.598)
13	9.6 (0.378)	16.0 (0.630)
14	10.4 (0.409)	16.8 (0.661)
15	11.2 (0.441)	17.6 (0.693)
16	12.0 (0.472)	18.4 (0.724)
17	12.8 (0.504)	19.2 (0.756)
18	13.6 (0.535)	20.0 (0.787)
19	14.4 (0.567)	20.8 (0.819)
20	15.2 (0.598)	21.6 (0.850)

HOW TO ORDER

04	6206	0XX	000	800
		Number of Contacts		1000 Connectors per Tape and Reel.

0.80mm Pitch

Series 6206 - Tape and Reel Package

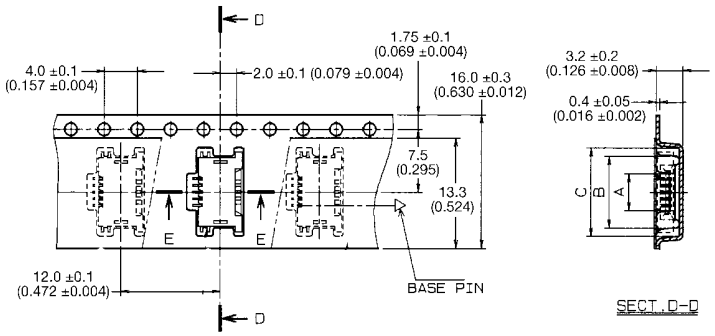

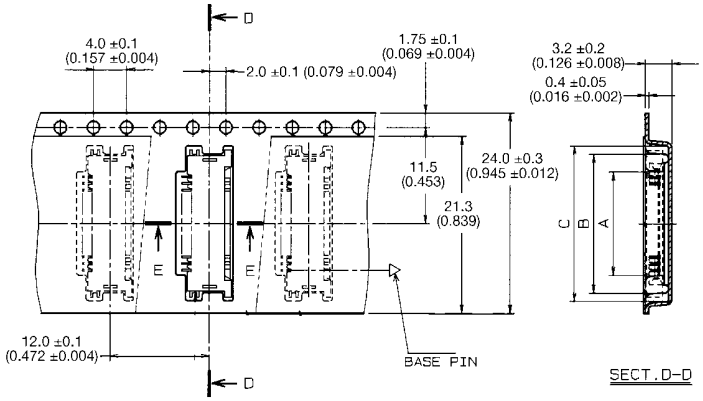

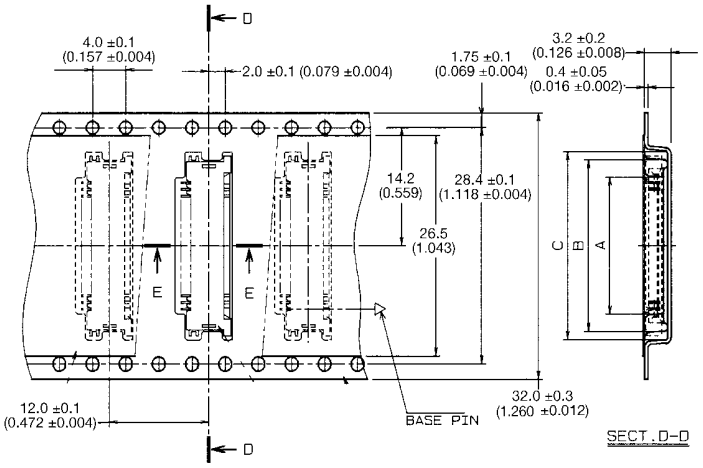

Assembly Number	No. of Contacts	A	B	C
04 6206 004 000 800	04	3.6 (0.142)	7.8 (0.307)	9.8 (0.386)
04 6206 005 000 800	05	4.4 (0.173)	8.6 (0.339)	10.6 (0.417)

Assembly Number	No. of Contacts	A	B	C
04 6206 006 000 800	06	5.2 (0.205)	9.4 (0.370)	11.4 (0.449)
007	07	6.0 (0.236)	10.2 (0.402)	12.2 (0.480)
008	08	6.8 (0.268)	11.0 (0.433)	13.0 (0.512)
009	09	7.6 (0.299)	11.8 (0.465)	13.8 (0.543)
010	10	8.4 (0.331)	12.6 (0.496)	14.6 (0.575)
011	11	9.2 (0.362)	13.4 (0.528)	15.4 (0.606)
012	12	10.0 (0.394)	14.2 (0.559)	16.2 (0.638)
013	13	10.8 (0.425)	15.0 (0.591)	17.0 (0.669)
014	14	11.6 (0.457)	15.8 (0.622)	17.8 (0.701)
04 6206 015 000 800	15	12.4 (0.488)	16.6 (0.654)	18.6 (0.732)

Assembly Number	No. of Contacts	A	B	C
04 6206 016 000 800	16	13.2 (0.520)	17.4 (0.685)	19.4 (0.764)
017	17	14.0 (0.551)	18.2 (0.717)	20.2 (0.795)
018	18	14.8 (0.583)	19.0 (0.748)	21.0 (0.827)
019	19	15.6 (0.614)	19.8 (0.780)	21.8 (0.858)
04 6206 020 000 800	20	16.4 (0.646)	20.6 (0.811)	22.6 (0.890)

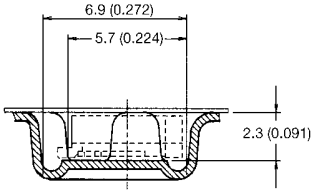

HOW TO ORDER

04	6206	0XX	000	800

Number of Contacts

1000 Connectors per Tape and Reel.

1.00mm Pitch

Product Selector Guide

We also can supply C/Ag (Carbon Silver) type connectors.

SMT	ST (Vertical)	ZIF	6208 6229 6248
		NON-ZIF (LIF)	6226 6232
	RA (Right Angle)	ZIF	6200 6224
		NON-ZIF (LIF)	6227 6232
DIP Through Hole	ST (Vertical)	ZIF	6229 6208
		NON-ZIF (LIF)	6232
	RA (Right Angle)	ZIF	6200
		NON-ZIF (LIF)	6232 6228

millimeters (inches)

Series	6232					6200		6224
Type	NON-ZIF (LIF) RA DIP	NON-ZIF (LIF) ST DIP	NON-ZIF (LIF) RA SMT	NON-ZIF (LIF) RA SMT	NON-ZIF (LIF) ST SMT	ZIF RA DIP	ZIF RA SMT	ZIF RA SMT
Contact	Bottom	Single	Top	Bottom	Single	Bottom	Bottom	Top
Profile Height in mm	3.00 (0.118)	5.50 (0.217)	3.00 (0.118)	3.00 (0.118)	5.10 (0.201)	2.90 (0.114)	2.90 (0.114)	2.90 (0.114)
Number of Contacts	3-30	3-30	3-30	3-30	3-30	5-30	5-30	5-30
Current Rating	0.5A Max.	0.5A Max.	0.5A Max.	0.5A Max.	0.5A Max.	1.0A Max.	1.0A Max.	1.0A Max.
Voltage Rating	50V Max.	50V Max.	50V Max.	50V Max.	50V Max.	50V Max.	50V Max	50V Max.
Dielectric Withstanding Voltage	500Vrms	500Vrms	500Vrms	500Vrms	500Vrms	500Vrms	500Vrms	500Vrms
Contact Material	Phosphor bronze, Tin-Plated							
Insulator Material	(Glass-filled Nylon) (Glass-filled PPS)	Glass-filled Nylon	Glass-filled PPS	Glass-filled PPS	Glass-filled PPS	Glass-filled PPS	Glass-filled PPS	Glass-filled PPS
Operating Temperature	-40ºC~+85ºC		-40ºC~+85ºC			-40ºC~+85ºC	-40ºC~+85ºC	-40ºC~+85ºC
FFC/FPC Thickness	0.3±0.05 (0.012±0.002)	0.3±0.05 (0.012±0.002)	0.3±0.05 (0.012±0.002)	0.3±0.05 (0.012±0.002)	0.3±0.05 (0.012±0.002)	0.3±0.05 (0.012±0.002)	0.3±0.05 (0.012±0.002)	0.3±0.05 (0.012±0.002)
Page	45-52					53-56		57-58

RA = Right Angle ST = Straight DIP = Through Hole

1.00mm Pitch

Product Selector Guide

millimeters (inches)

Series	6208		6229		6248	6226	6227	6228
Type	ZIF ST DIP	ZIF ST SMT	ZIF ST DIP	ZIF ST SMT	ZIF ST SMT Slide-Lock	NON-ZIF (LIF) ST SMT	NON-ZIF (LIF) RA SMT	NON-ZIF (LIF) RA DIP
Contact	Single	Single	Single	Single	Single	Dual	Dual	Top
Profile Height in mm	5-19P; 5.0 (0.197) 20-25P; 5.2 (0.205) 26-30P; 5.5 (0.217)		5.70 (0.224)	5.70 (0.224)	5.50 (0.217)	3.50 (0.138)	2.00 (0.079)	3.00 (0.118)
Number of Contacts	5-30	5-30	40	40	24, 30	4-20	4-20	3-30
Current Rating	1.0A Max.	1.0A Max	1.0A Max.	1.0A Max.	0.5A Max	1.0A Max.	1.0A Max.	0.5A Max.
Voltage Rating	50V Max	50V Max	50V Max.	50V Max.	50V Max.	50V Max.	50V Max.	50V Max.
Dielectric Withstanding Voltage	500Vrms	500Vrms	500Vrms	500Vrms	500Vrms	500Vrms	500Vrms	500Vrms
Contact Material	Phosphor bronze, Tin-Plated							
Insulator Material	Glass-filled Nylon	Glass-filled PPS	Glass-filled PPS	Glass-filled PPS	Heat Resistance Plastic	Glass-filled Nylon	Glass-filled Nylon	Glass-filled Nylon
Operating Temperature	-40ºC~+85ºC	-40ºC~+85ºC	-40ºC~+85ºC		-40ºC~+85ºC	-40ºC~+85ºC	-40ºC~+85ºC	-40ºC~+85ºC
FFC/FPC Thickness	0.3±0.05 (0.012±0.002)	0.3±0.05 (0.012±0.002)	0.3±0.05 (0.012±0.002)	0.3±0.05 (0.012±0.002)	0.3±0.05 (0.012±0.002)	0.3±0.05 (0.012±0.002)	0.3±0.05 (0.012±0.002)	0.3±0.05 (0.012±0.002)
Page	59-61		62-63		64	65-66	67-68	69

SMT	ST (Vertical)	ZIF	6208 6229 6248
		NON-ZIF (LIF)	6226 6232
	RA (Right Angle)	ZIF	6200 6224
		NON-ZIF (LIF)	6227 6232
DIP (Through Hole)	ST (Vertical)	ZIF	6229 6208
		NON-ZIF (LIF)	6232
	RA (Right Angle)	ZIF	6200
		NON-ZIF (LIF)	6232 6228

RA = Right Angle ST = Straight DIP = Through Hole

1.00mm Pitch

Series 6232 - LIF Right Angle SMT (Bottom Contact Type)

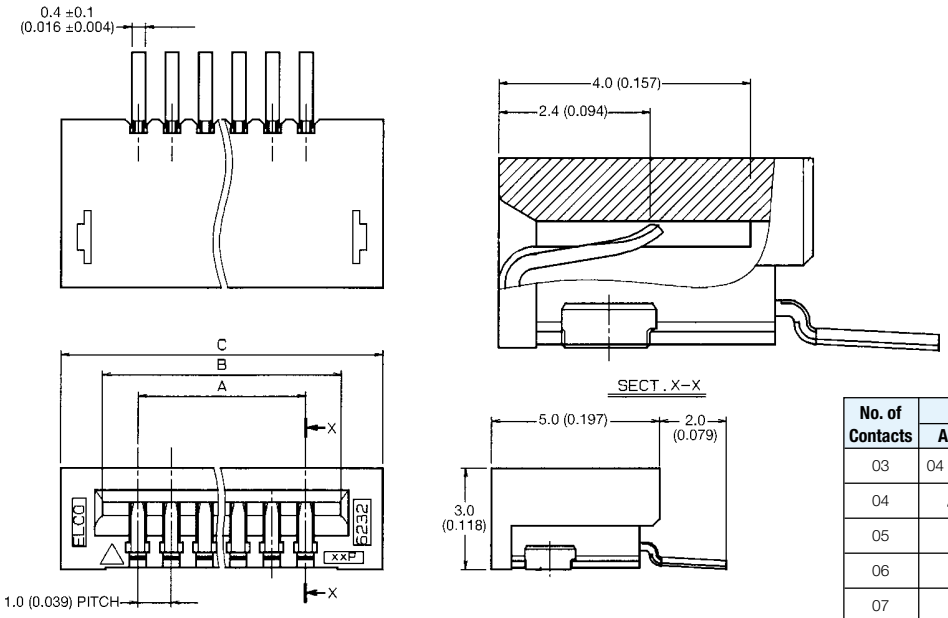

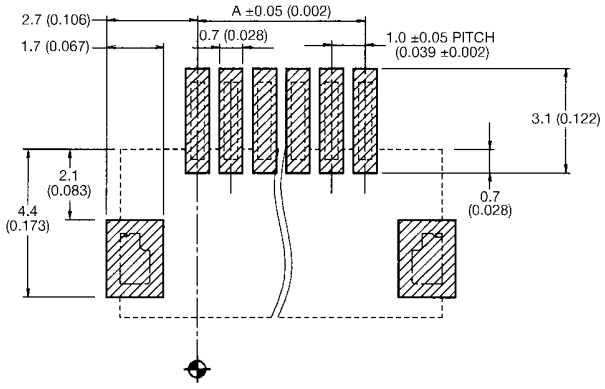

MOUNTING LAYOUT (CONN. MOUNTING SIDE)

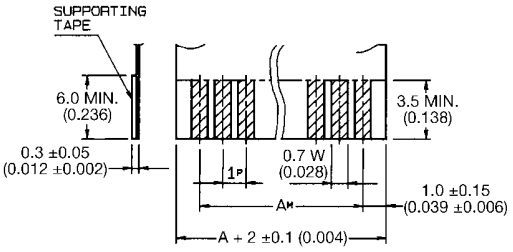

FFC/FPC
APPLICABLE FFC/FPC

	Tolerance		
Kind	P	W	M
FFC	±0.05	±0.03	±0.1
FPC	±0.02	+0.1 -0.05	±0.05

No. of Contacts	Assembly Number	A	B	C
03	04 6232 103 102 800	2.0 (0.079)	4.1 (0.161)	6.6 (0.260)
04	104	3.0 (0.118)	5.1 (0.201)	7.6 (0.299)
05	105	4.0 (0.157)	6.1 (0.240)	8.6 (0.339)
06	106	5.0 (0.197)	7.1 (0.280)	9.6 (0.378)
07	107	6.0 (0.236)	8.1 (0.319)	10.6 (0.417)
08	108	7.0 (0.276)	9.1 (0.358)	11.6 (0.457)
09	109	8.0 (0.315)	10.1 (0.398)	12.6 (0.496)
10	110	9.0 (0.354)	11.1 (0.437)	13.6 (0.535)
11	111	10.0 (0.394)	12.1 (0.476)	14.6 (0.575)
12	112	11.0 (0.433)	13.1 (0.516)	15.6 (0.614)
13	113	12.0 (0.472)	14.1 (0.555)	16.6 (0.654)
14	114	13.0 (0.512)	15.1 (0.594)	17.6 (0.693)
15	115	14.0 (0.551)	16.1 (0.634)	18.6 (0.732)
16	116	15.0 (0.591)	17.1 (0.673)	19.6 (0.772)
17	117	16.0 (0.630)	18.1 (0.713)	20.6 (0.811)
18	118	17.0 (0.669)	19.1 (0.752)	21.6 (0.850)
19	119	18.0 (0.709)	20.1 (0.791)	22.6 (0.890)
20	120	19.0 (0.748)	21.1 (0.831)	23.6 (0.929)
21	121	20.0 (0.787)	22.1 (0.870)	24.6 (0.969)
22	122	21.0 (0.827)	23.1 (0.909)	25.6 (1.008)
23	123	22.0 (0.866)	24.1 (0.949)	26.6 (1.047)
24	124	23.0 (0.906)	25.1 (0.988)	27.6 (1.087)
25	125	24.0 (0.945)	26.1 (1.028)	28.6 (1.126)
26	126	25.0 (0.984)	27.1 (1.067)	29.6 (1.165)
27	127	26.0 (1.024)	28.1 (1.106)	30.6 (1.205)
28	128	27.0 (1.063)	29.1 (1.146)	31.6 (1.244)
29	129	28.0 (1.102)	30.1 (1.185)	32.6 (1.283)
30	04 6232 130 102 800	29.0 (1.142)	31.1 (1.224)	33.6 (1.323)

HOW TO ORDER

04 **6232** **1XX** **102** **800**

Number of Contacts

ELCO

1.00mm Pitch

Series 6232 - Tape and Reel Package

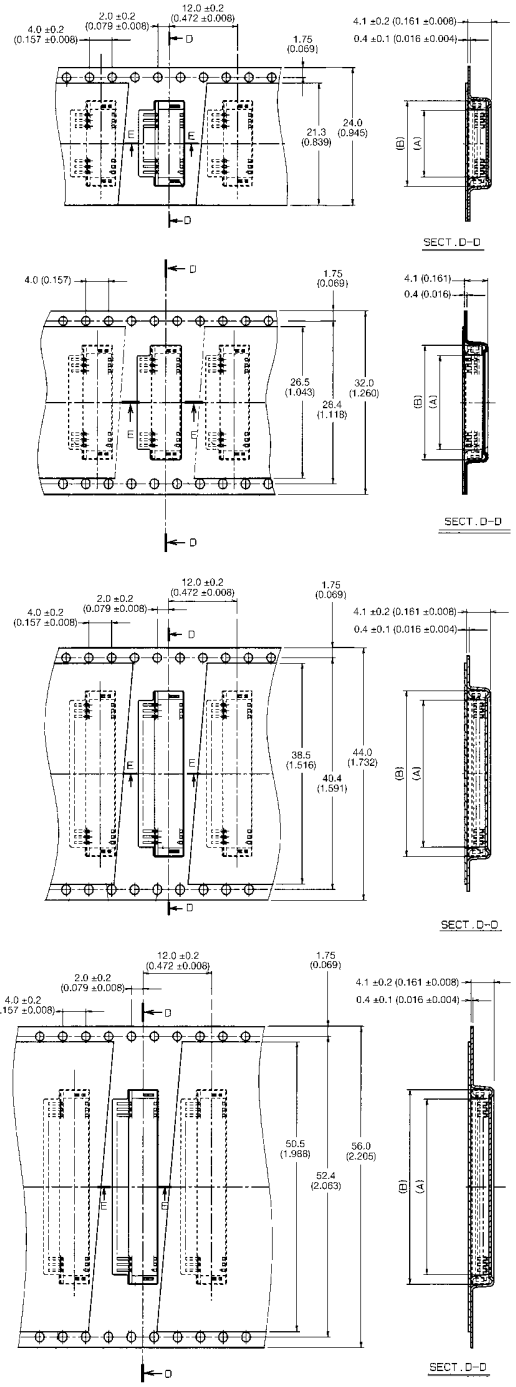

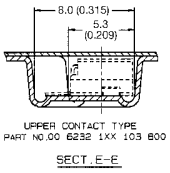

Assembly Number	No. of Contacts	A	B
04 6232 103 10X 800	03	3.6 (0.142)	6.9 (0.272)
104	04	4.6 (0.181)	7.9 (0.311)
105	05	5.6 (0.220)	8.9 (0.350)
106	06	6.6 (0.260)	9.9 (0.390)
107	07	7.6 (0.299)	10.9 (0.429)
108	08	8.6 (0.339)	11.9 (0.469)
109	09	9.6 (0.378)	12.9 (0.508)
110	10	10.6 (0.417)	13.9 (0.547)
04 6232 111 10X 800	11	11.6 (0.457)	14.9 (0.587)

Assembly Number	No. of Contacts	A	B
04 6232 112 10X 800	12	12.6 (0.496)	15.9 (0.626)
113	13	13.6 (0.535)	16.9 (0.665)
114	14	14.6 (0.575)	17.9 (0.705)
115	15	15.6 (0.614)	18.9 (0.744)
116	16	16.6 (0.654)	19.9 (0.783)
117	17	17.6 (0.693)	20.9 (0.823)
04 6232 118 10X 800	18	18.6 (0.732)	21.9 (0.862)

Assembly Number	No. of Contacts	A	B
04 6232 119 10X 800	19	19.6 (0.772)	22.9 (0.902)
120	20	20.6 (0.811)	23.9 (0.941)
121	21	21.6 (0.850)	24.9 (0.980)
122	22	22.6 (0.890)	25.9 (1.020)
123	23	23.6 (0.929)	26.9 (1.059)
124	24	24.6 (0.969)	27.9 (1.098)
04 6232 125 10X 800	25	25.6 (1.008)	28.9 (1.138)

Assembly Number	No. of Contacts	A	B
04 6232 103 10X 800	03	3.6 (0.142)	6.9 (0.272)
104	04	4.6 (0.181)	7.9 (0.311)
105	05	5.6 (0.220)	8.9 (0.350)
106	06	6.6 (0.260)	9.9 (0.390)
107	07	7.6 (0.299)	10.9 (0.429)
108	08	8.6 (0.339)	11.9 (0.469)
109	09	9.6 (0.378)	12.9 (0.508)
04 6232 110 10X 800	10	10.6 (0.417)	13.9 (0.547)

HOW TO ORDER

04	6232	1XX	102	800

Number of Contacts

1000 Connectors per Tape and Reel.

1.00mm Pitch

Series 6232 - LIF Right Angle SMT (Top Contact Type)

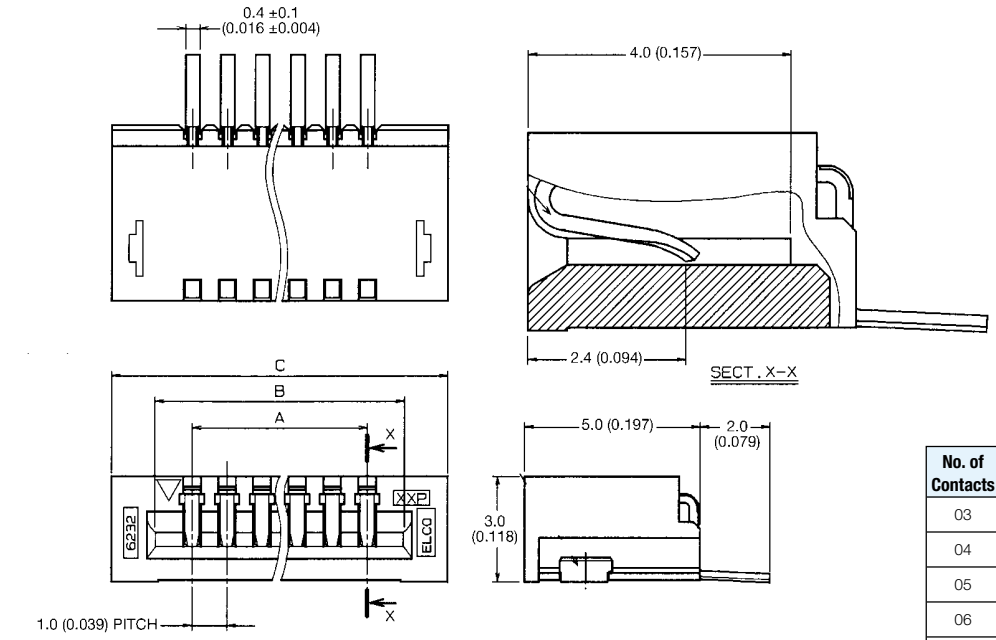

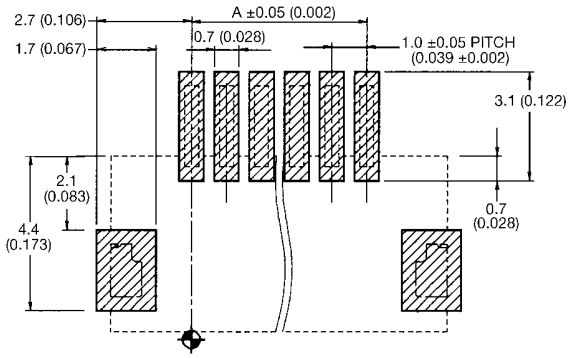

MOUNTING LAYOUT (CONN. MOUNTING SIDE)

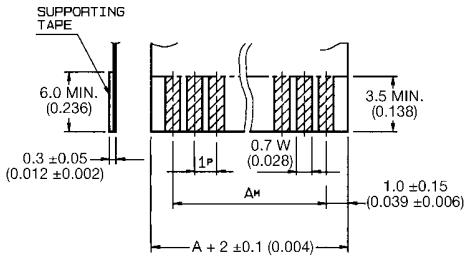

	Tolerance		
Kind	**P**	**W**	**M**
FFC	±0.05	±0.03	±0.1
FPC	±0.02	+0.1 -0.05	±0.05

Applicable FFC/FPC

Specifications

- Number of Contacts – 3-30
- Tray Packaged or SMT Tape & Reel
- Voltage – 50V
- Current Rating – 0.5 amp max.
- Dielectric Withstanding Voltage – 500V RMS min.
- Operating Temperature – (-20°C - +70°C)
- Contact Material – phosphor bronze (tin-lead plated)
- Insulator Material – glass filled PPS or nylon
- FFC/FPC Thickness – 0.3 ±0.05mm (0.012 ±0.002")
- Profile Height – 3.0mm - 5.1mm (see sketch)

No. of Contacts	Assembly Number	A	B	C
03	04 6232 103 103 800	2.0 (0.079)	4.1 (0.161)	6.6 (0.260)
04	104	3.0 (0.118)	5.1 (0.201)	7.6 (0.299)
05	105	4.0 (0.157)	6.1 (0.240)	8.6 (0.339)
06	106	5.0 (0.197)	7.1 (0.280)	9.6 (0.378)
07	107	6.0 (0.236)	8.1 (0.319)	10.6 (0.417)
08	108	7.0 (0.276)	9.1 (0.358)	11.6 (0.457)
09	109	8.0 (0.315)	10.1 (0.398)	12.6 (0.496)
10	110	9.0 (0.354)	11.1 (0.437)	13.6 (0.535)
11	111	10.0 (0.394)	12.1 (0.476)	14.6 (0.575)
12	112	11.0 (0.433)	13.1 (0.516)	15.6 (0.614)
13	113	12.0 (0.472)	14.1 (0.555)	16.6 (0.654)
14	114	13.0 (0.512)	15.1 (0.594)	17.6 (0.693)
15	115	14.0 (0.551)	16.1 (0.634)	18.6 (0.732)
16	116	15.0 (0.591)	17.1 (0.673)	19.6 (0.772)
17	117	16.0 (0.630)	18.1 (0.713)	20.6 (0.811)
18	118	17.0 (0.669)	19.1 (0.752)	21.6 (0.850)
19	119	18.0 (0.709)	20.1 (0.791)	22.6 (0.890)
20	120	19.0 (0.748)	21.1 (0.831)	23.6 (0.929)
21	121	20.0 (0.787)	22.1 (0.870)	24.6 (0.969)
22	122	21.0 (0.827)	23.1 (0.909)	25.6 (1.008)
23	123	22.0 (0.866)	24.1 (0.949)	26.6 (1.047)
24	124	23.0 (0.906)	25.1 (0.988)	27.6 (1.087)
25	125	24.0 (0.945)	26.1 (1.028)	28.6 (1.126)
26	126	25.0 (0.984)	27.1 (1.067)	29.6 (1.165)
27	127	26.0 (1.024)	28.1 (1.106)	30.6 (1.205)
28	128	27.0 (1.063)	29.1 (1.146)	31.6 (1.244)
29	129	28.0 (1.102)	30.1 (1.185)	32.6 (1.283)
30	04 6232 130 103 800	29.0 (1.142)	31.1 (1.224)	33.6 (1.323)

HOW TO ORDER

04 **6232** **1XX** **103** **800**

Number of Contacts

1.00mm Pitch

Series 6232 - Tape and Reel Package

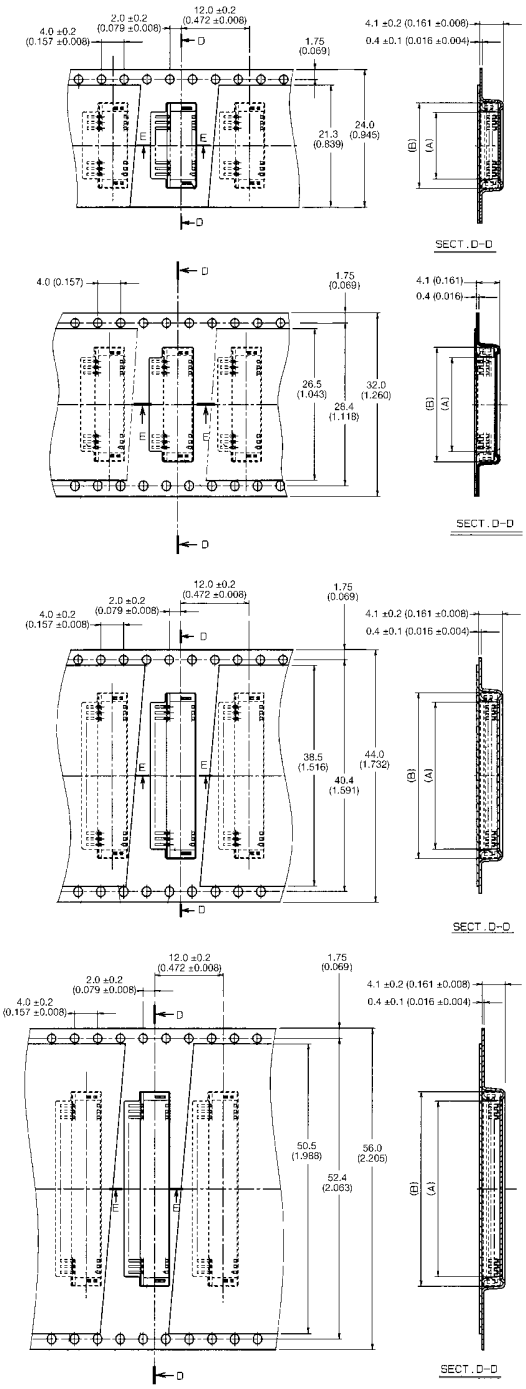

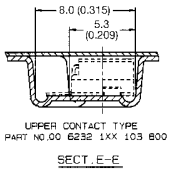

Assembly Number	No. of Contacts	A	B
04 6232 103 10X 800	03	3.6 (0.142)	6.9 (0.272)
104	04	4.6 (0.181)	7.9 (0.311)
105	05	5.6 (0.220)	8.9 (0.350)
106	06	6.6 (0.260)	9.9 (0.390)
107	07	7.6 (0.299)	10.9 (0.429)
108	08	8.6 (0.339)	11.9 (0.469)
109	09	9.6 (0.378)	12.9 (0.508)
110	10	10.6 (0.417)	13.9 (0.547)
04 6232 111 10X 800	11	11.6 (0.457)	14.9 (0.587)

Assembly Number	No. of Contacts	A	B
04 6232 112 10X 800	12	12.6 (0.496)	15.9 (0.626)
113	13	13.6 (0.535)	16.9 (0.665)
114	14	14.6 (0.575)	17.9 (0.705)
115	15	15.6 (0.614)	18.9 (0.744)
116	16	16.6 (0.654)	19.9 (0.783)
117	17	17.6 (0.693)	20.9 (0.823)
04 6232 118 10X 800	18	18.6 (0.732)	21.9 (0.862)

Assembly Number	No. of Contacts	A	B
04 6232 119 10X 800	19	19.6 (0.772)	22.9 (0.902)
120	20	20.6 (0.811)	23.9 (0.941)
121	21	21.6 (0.850)	24.9 (0.980)
122	22	22.6 (0.890)	25.9 (1.020)
123	23	23.6 (0.929)	26.9 (1.059)
124	24	24.6 (0.969)	27.9 (1.098)
04 6232 125 10X 800	25	25.6 (1.008)	28.9 (1.138)

Assembly Number	No. of Contacts	A	B
04 6232 103 10X 800	03	3.6 (0.142)	6.9 (0.272)
104	04	4.6 (0.181)	7.9 (0.311)
105	05	5.6 (0.220)	8.9 (0.350)
106	06	6.6 (0.260)	9.9 (0.390)
107	07	7.6 (0.299)	10.9 (0.429)
108	08	8.6 (0.339)	11.9 (0.469)
109	09	9.6 (0.378)	12.9 (0.508)
04 6232 110 10X 800	10	10.6 (0.417)	13.9 (0.547)

HOW TO ORDER

04	6232	1XX	103	800

Number of Contacts

900 Connectors per Tape and Reel.

1.00mm Pitch

Series 6232 - LIF Vertical SMT

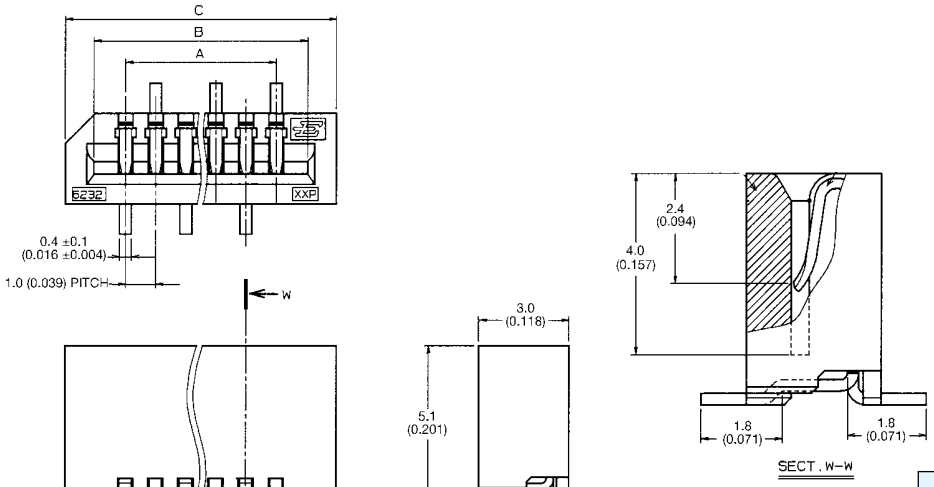

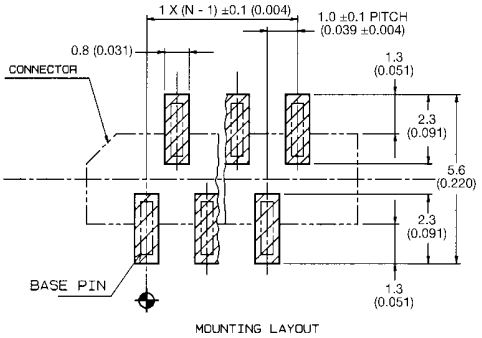

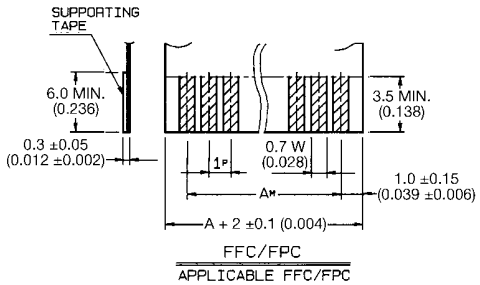

	Tolerance		
Kind	P	W	M
FFC	±0.05	±0.03	±0.1
FPC	±0.02	+0.1 -0.05	±0.05

No. of Contacts	Assembly Number	A	B	C
03	00 6232 103 006 800	2.0 (0.079)	4.1 (0.161)	6.0 (0.236)
04	104	3.0 (0.118)	5.1 (0.201)	7.0 (0.276)
05	105	4.0 (0.157)	6.1 (0.240)	8.0 (0.315)
06	106	5.0 (0.197)	7.1 (0.280)	9.0 (0.354)
07	107	6.0 (0.236)	8.1 (0.319)	10.0 (0.394)
08	108	7.0 (0.276)	9.1 (0.358)	11.0 (0.433)
09	109	8.0 (0.315)	10.1 (0.398)	12.0 (0.472)
10	110	9.0 (0.354)	11.1 (0.437)	13.0 (0.512)
11	111	10.0 (0.394)	12.1 (0.476)	14.0 (0.551)
12	112	11.0 (0.433)	13.1 (0.516)	15.0 (0.591)
13	113	12.0 (0.472)	14.1 (0.555)	16.0 (0.630)
14	114	13.0 (0.512)	15.1 (0.594)	17.0 (0.669)
15	115	14.0 (0.551)	16.1 (0.634)	18.0 (0.709)
16	116	15.0 (0.591)	17.1 (0.673)	19.0 (0.748)
17	117	16.0 (0.630)	18.1 (0.713)	20.0 (0.787)
18	118	17.0 (0.669)	19.1 (0.752)	21.0 (0.827)
19	119	18.0 (0.709)	20.1 (0.791)	22.0 (0.866)
20	120	19.0 (0.748)	21.1 (0.831)	23.0 (0.906)
21	121	20.0 (0.787)	22.1 (0.870)	24.0 (0.945)
22	122	21.0 (0.827)	23.1 (0.909)	25.0 (0.984)
23	123	22.0 (0.866)	24.1 (0.949)	26.0 (1.024)
24	124	23.0 (0.906)	25.1 (0.988)	27.0 (1.063)
25	125	24.0 (0.945)	26.1 (1.028)	28.0 (1.102)
26	126	25.0 (0.984)	27.1 (1.067)	29.0 (1.142)
27	127	26.0 (1.024)	28.1 (1.106)	30.0 (1.181)
28	128	27.0 (1.063)	29.1 (1.146)	31.0 (1.220)
29	129	28.0 (1.102)	30.1 (1.185)	32.0 (1.260)
30	00 6232 130 006 800	29.0 (1.142)	31.1 (1.224)	33.0 (1.299)

HOW TO ORDER

04 **6232** **1XX** **015** **800**

Number of Contacts

For tape and reel package refer to page 50.

1.00mm Pitch

Series 6232 - Tape and Reel Package

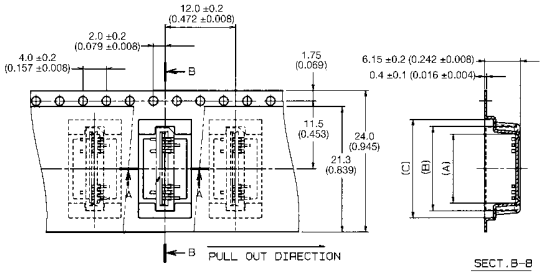

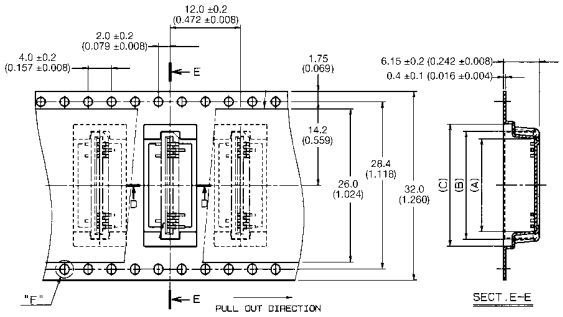

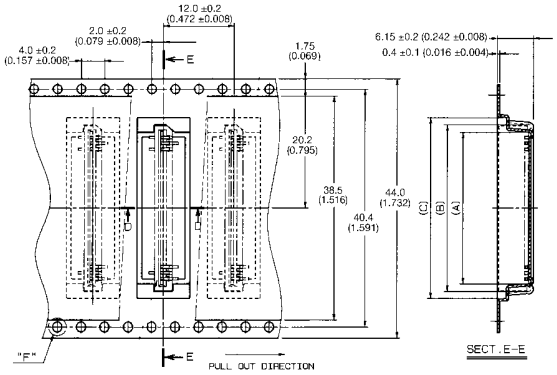

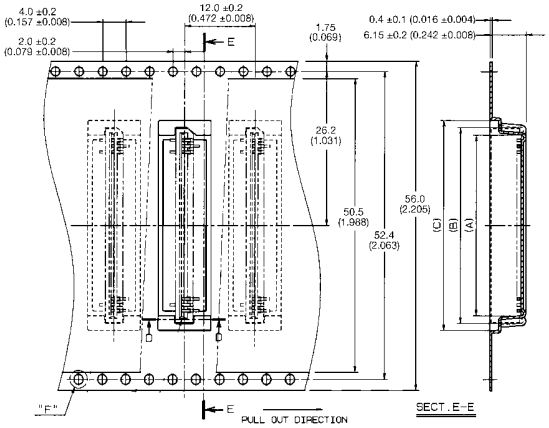

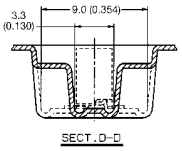

Assembly Number	No. of Contacts	A	B	C
04 6232 103 015 800	03	3.7 (0.146)	6.3 (0.248)	8.7 (0.343)
104	04	4.7 (0.185)	7.3 (0.287)	9.7 (0.382)
105	05	5.7 (0.224)	8.3 (0.327)	10.7 (0.421)
106	06	6.7 (0.264)	9.3 (0.366)	11.7 (0.461)
107	07	7.7 (0.303)	10.3 (0.406)	12.7 (0.500)
108	08	8.7 (0.343)	11.3 (0.445)	13.7 (0.539)
109	09	9.7 (0.382)	12.3 (0.484)	14.7 (0.579)
110	10	10.7 (0.421)	13.3 (0.524)	15.7 (0.618)
04 6232 111 015 800	11	11.7 (0.461)	14.3 (0.563)	16.7 (0.658)

Assembly Number	No. of Contacts	A	B	C
04 6232 112 015 800	12	12.7 (0.500)	15.3 (0.602)	17.7 (0.697)
113	13	13.7 (0.539)	16.3 (0.642)	18.7 (0.736)
114	14	14.7 (0.579)	17.3 (0.681)	19.7 (0.776)
115	15	15.7 (0.618)	18.3 (0.720)	20.7 (0.815)
116	16	16.7 (0.658)	19.3 (0.760)	21.7 (0.854)
117	17	17.7 (0.697)	20.3 (0.799)	22.7 (0.894)
04 6232 118 015 800	18	18.7 (0.736)	21.3 (0.839)	23.7 (0.933)

Assembly Number	No. of Contacts	A	B	C
04 6232 119 015 800	19	19.7 (0.776)	22.3 (0.878)	24.7 (0.972)
120	20	20.7 (0.815)	23.3 (0.917)	25.7 (1.012)
121	21	21.7 (0.854)	24.3 (0.957)	26.7 (1.051)
122	22	22.7 (0.894)	25.3 (0.996)	27.7 (1.091)
123	23	23.7 (0.933)	26.3 (1.035)	28.7 (1.130)
124	24	24.7 (0.972)	27.3 (1.075)	29.7 (1.169)
04 6232 125 015 800	25	25.7 (1.012)	28.3 (1.114)	30.7 (1.209)

Assembly Number	No. of Contacts	A	B	C
04 6232 126 015 800	26	26.7 (1.051)	29.3 (1.154)	31.7 (1.248)
127	27	27.7 (1.091)	30.3 (1.193)	32.7 (1.287)
128	28	28.7 (1.130)	31.3 (1.232)	33.7 (1.327)
129	29	29.7 (1.169)	32.3 (1.272)	34.7 (1.366)
04 6232 130 015 800	30	30.7 (1.209)	33.3 (1.311)	35.7 (1.406)

HOW TO ORDER

04	6232	1XX	015	800
		Number of Contacts		900 Connectors per Tape and Reel.

1.00mm Pitch

Series 6232 - LIF Right Angle Through Hole (Bottom Contact Type)

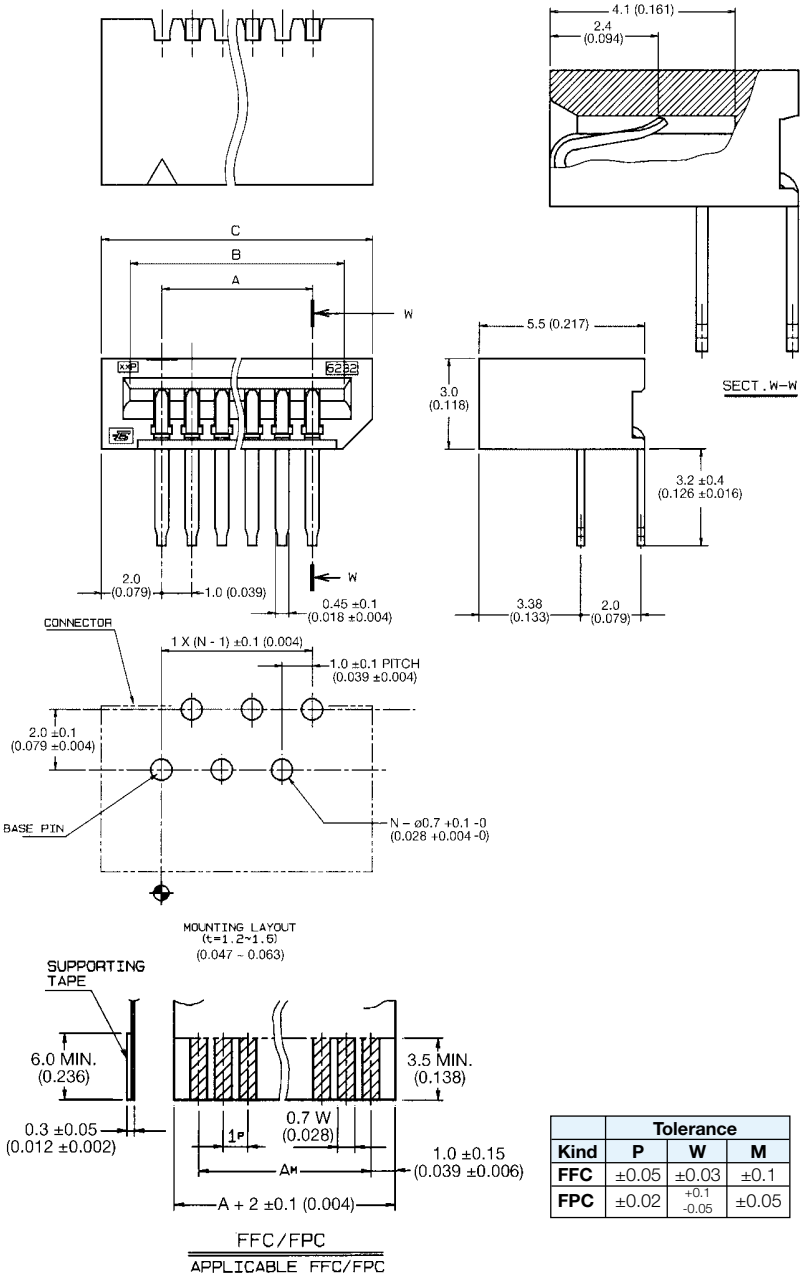

No. of Contacts	Assembly Number	A	B	C	Qty. Per Box
03	00 6232 003 104 800	2.0 (0.079)	4.1 (0.161)	6.0 (0.236)	6000
04	004	3.0 (0.118)	5.1 (0.201)	7.0 (0.276)	5100
05	005	4.0 (0.157)	6.1 (0.240)	8.0 (0.315)	4500
06	006	5.0 (0.197)	7.1 (0.280)	9.0 (0.354)	4000
07	007	6.0 (0.236)	8.1 (0.319)	10.0 (0.394)	3600
08	008	7.0 (0.276)	9.1 (0.358)	11.0 (0.433)	3200
09	009	8.0 (0.315)	10.1 (0.398)	12.0 (0.472)	3000
10	010	9.0 (0.354)	11.1 (0.437)	13.0 (0.512)	2700
11	011	10.0 (0.394)	12.1 (0.476)	14.0 (0.551)	2500
12	012	11.0 (0.433)	13.1 (0.516)	15.0 (0591)	2400
13	013	12.0 (0.472)	14.1 (0.555)	16.0 (0.630)	2200
14	014	13.0 (0.512)	15.1 (0.594)	17.0 (0.669)	2100
15	015	14.0 (0.551)	16.1 (0.634)	18.0 (0.709)	2000
16	016	15.0 (0.591)	17.1 (0.673)	19.0 (0.748)	1900
17	017	16.0 (0.630)	18.1 (0.713)	20.0 (0.787)	1800
18	018	17.0 (0.669)	19.1 (0.752)	21.0 (0.827)	1700
19	019	18.0 (0.709)	20.1 (0.791)	22.0 (0.866)	1600
20	020	19.0 (0.748)	21.1 (0.831)	23.0 (0.906)	1500
21	021	20.0 (0.787)	22.1 (0.870)	24.0 (0.945)	1500
22	022	21.0 (0.827)	23.1 (0.909)	25.0 (0.984)	1400
23	023	22.0 (0.866)	24.1 (0.949)	26.0 (1.024)	1300
24	024	23.0 (0.906)	25.1 (0.988)	27.0 (1.063)	1300
25	025	24.0 (0.945)	26.1 (1.028)	28.0 (1.102)	1200
26	026	25.0 (0.984)	27.1 (1.067)	29.0 (1.142)	1200
27	027	26.0 (1.024)	28.1 (1.106)	30.0 (1.181)	1200
28	028	27.0 (1.063)	29.1 (1.146)	31.0 (1.220)	1100
29	029	28.0 (1.102)	30.1 (1.185)	32.0 (1.260)	1100
30	00 6232 030 104 800	29.0 (1.142)	31.1 (1.224)	33.0 (1.299)	1000

	Tolerance		
Kind	P	W	M
FFC	±0.05	±0.03	±0.1
FPC	±0.02	+0.1 -0.05	±0.05

HOW TO ORDER

00	6232	0XX	104	800

Number of Contacts

1.00mm Pitch

Series 6232 - LIF Vertical Through Hole

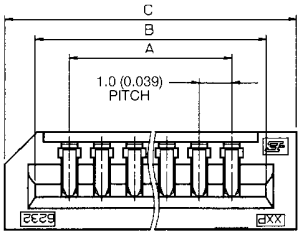

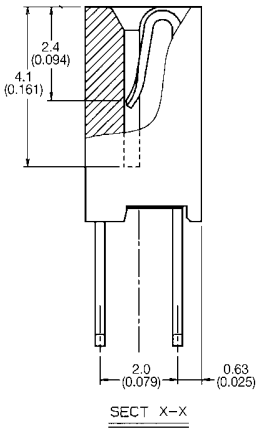

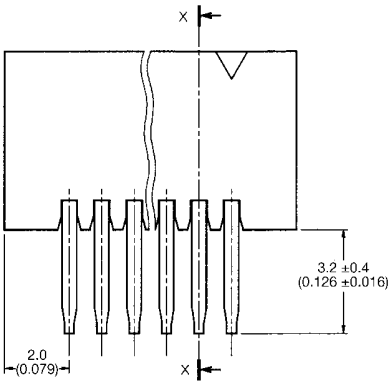

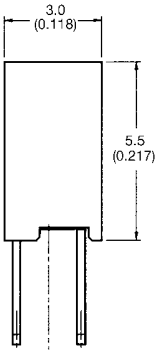

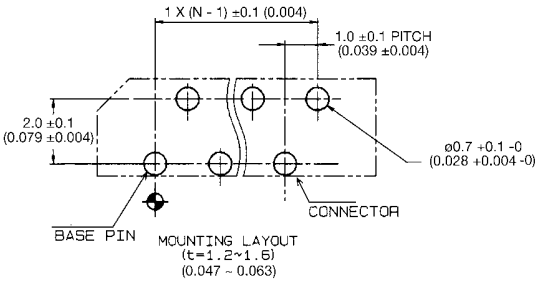

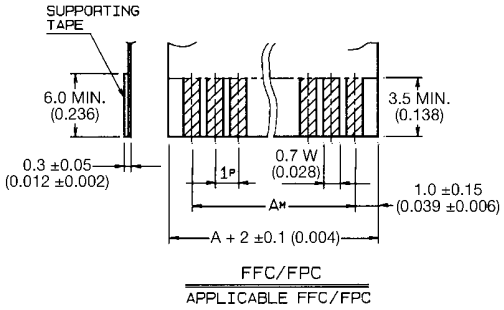

	Tolerance		
Kind	P	W	M
FFC	±0.05	±0.03	±0.1
FPC	±0.02	+0.1 -0.05	±0.05

No. of Contacts	Assembly Number	A	B	C	Qty. Per Box
03	00 6232 003 XXX 800	2.0 (0.079)	4.1 (0.161)	6.0 (0.236)	9000
04	004	3.0 (0.118)	5.1 (0.201)	7.0 (0.276)	7650
05	005	4.0 (0.157)	6.1 (0.240)	8.0 (0.315)	6750
06	006	5.0 (0.197)	7.1 (0.280)	9.0 (0.354)	6000
07	007	6.0 (0.236)	8.1 (0.319)	10.0 (0.394)	5400
08	008	7.0 (0.276)	9.1 (0.358)	11.0 (0.433)	4950
09	009	8.0 (0.315)	10.1 (0.398)	12.0 (0.472)	4500
10	010	9.0 (0.354)	11.1 (0.437)	13.0 (0.512)	4050
11	011	10.0 (0.394)	12.1 (0.476)	14.0 (0.551)	3750
12	012	11.0 (0.433)	13.1 (0.516)	15.0 (0.591)	3600
13	013	12.0 (0.472)	14.1 (0.555)	16.0 (0.630)	3300
14	014	13.0 (0.512)	15.1 (0.594)	17.0 (0.669)	3150
15	015	14.0 (0.551)	16.1 (0.634)	18.0 (0.709)	3000
16	016	15.0 (0.591)	17.1 (0.673)	19.0 (0.748)	2850
17	017	16.0 (0.630)	18.1 (0.713)	20.0 (0.787)	2700
18	018	17.0 (0.669)	19.1 (0.752)	21.0 (0.827)	2550
19	019	18.0 (0.709)	20.1 (0.791)	22.0 (0.866)	2400
20	020	19.0 (0.748)	21.1 (0.831)	23.0 (0.906)	2250
21	021	20.0 (0.787)	22.1 (0.870)	24.0 (0.945)	2250
22	022	21.0 (0.827)	23.1 (0.909)	25.0 (0.984)	2100
23	023	22.0 (0.866)	24.1 (0.949)	26.0 (1.024)	1950
24	024	23.0 (0.906)	25.1 (0.988)	27.0 (1.063)	1950
25	025	24.0 (0.945)	26.1 (1.028)	28.0 (1.102)	1800
26	026	25.0 (0.984)	27.1 (1.067)	29.0 (1.142)	1800
27	027	26.0 (1.024)	28.1 (1.106)	30.0 (1.181)	1800
28	028	27.0 (1.063)	29.1 (1.146)	31.0 (1.220)	1650
29	029	28.0 (1.102)	30.1 (1.185)	32.0 (1.260)	1650
30	00 6232 030 XXX 800	29.0 (1.142)	31.1 (1.224)	33.0 (1.299)	1650

HOW TO ORDER

00 **6232** **0XX** **XXX** **800**

Number of Contacts

Variation Code
006 = With Kinked Leg
007 = Without Kinked Leg

1.00mm Pitch

Series 6200 - ZIF Right Angle SMT (Bottom Contact Type)

WITH SOLDER TAB, NO BOSS

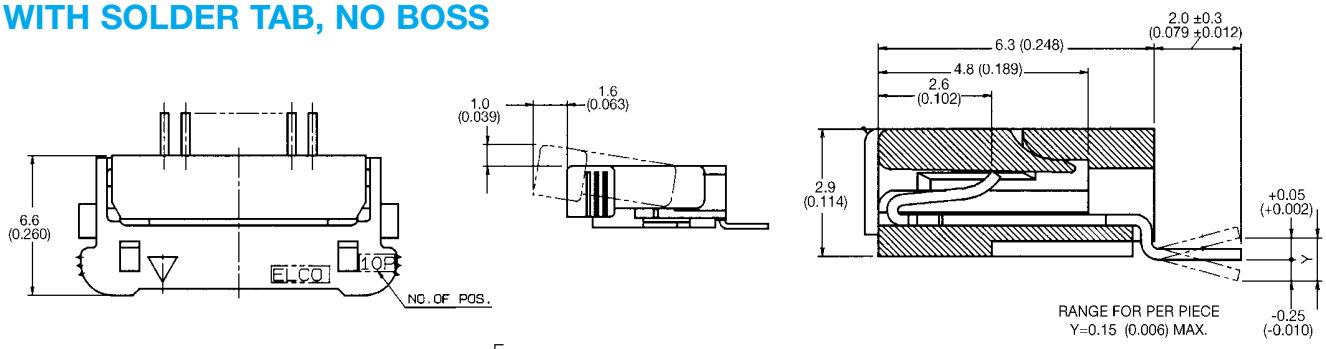

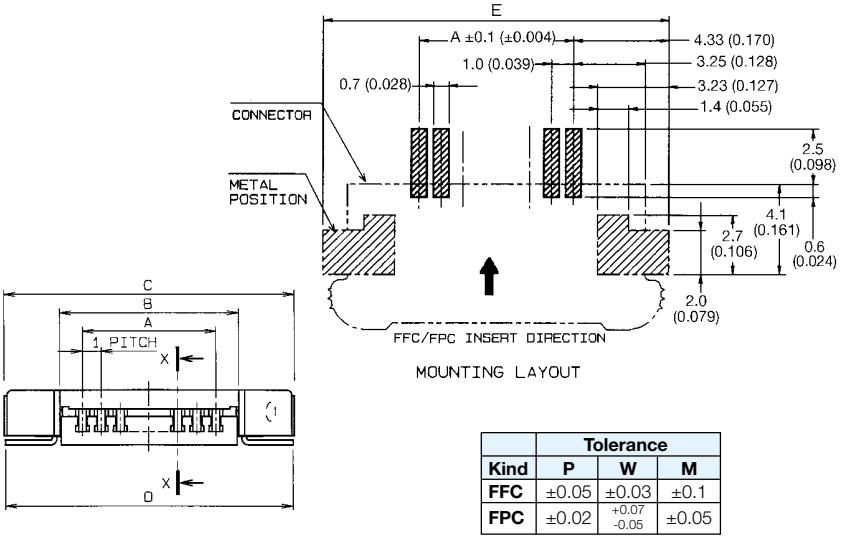

DETAIL X–X

Assembly Number	No. of Contacts	A	B	C	E	F	Qty. Per Box
00 6200 057 032 800	05	4.0 (0.157)	6.4 (0.252)	12.25 (0.482)	12.65 (0.498)	4.0 (0.157)	3190
067	06	5.0 (0.197)	7.4 (0.291)	13.25 (0.522)	13.65 (0.537)	5.0 (0.197)	2970
077	07	6.0 (0.236)	8.4 (0.331)	14.25 (0.561)	14.65 (0.577)	6.0 (0.236)	2750
087	08	7.0 (0.276)	9.4 (0.370)	15.25 (0.600)	15.65 (0.616)	7.0 (0.276)	2530
097	09	8.0 (0.315)	10.4 (0.409)	16.25 (0.640)	16.65 (0.656)	8.0 (0.315)	2420
107	10	9.0 (0.354)	11.4 (0.449)	17.25 (0.679)	17.65 (0.695)	9.0 (0.354)	2310
117	11	10.0 (0.394)	12.4 (0.488)	18.25 (0.719)	18.65 (0.734)	10.0 (0.394)	2090
127	12	11.0 (0.433)	13.4 (0.528)	19.25 (0.758)	19.65 (0.774)	11.0 (0.433)	1980
137	13	12.0 (0.472)	14.4 (0.567)	20.25 (0.797)	20.65 (0.813)	12.0 (0.472)	1870
147	14	13.0 (0.512)	15.4 (0.606)	21.25 (0.837)	21.65 (0.852)	13.0 (0.512)	1760
157	15	14.0 (0.551)	16.4 (0.646)	22.25 (0.876)	22.65 (0.892)	14.0 (0.551)	1760
167	16	15.0 (0.591)	17.4 (0.685)	23.25 (0.915)	23.65 (0.931)	15.0 (0.591)	1650
177	17	16.0 (0.630)	18.4 (0.724)	24.25 (0.955)	24.65 (0.970)	16.0 (0.630)	1540
187	18	17.0 (0.669)	19.4 (0.764)	25.25 (0.994)	25.65 (1.010)	17.0 (0.669)	1540
197	19	18.0 (0.709)	20.4 (0.803)	26.25 (1.033)	26.65 (1.049)	18.0 (0.709)	1430
00 6200 207 032 800	20	19.0 (0.748)	21.4 (0.843)	27.25 (1.073)	27.65 (1.089)	19.0 (0.748)	1430
217	21	20.0 (0.787)	22.4 (0.882)	28.25 (1.112)	28.65 (1.128)	20.0 (0.787)	1320
227	22	21.0 (0.827)	23.4 (0.921)	29.25 (1.152)	29.65 (1.167)	21.0 (0.827)	1320
237	23	22.0 (0.866)	24.4 (0.961)	30.25 (1.191)	30.65 (1.207)	22.0 (0.866)	1210
247	24	23.0 (0.906)	25.4 (1.000)	31.25 (1.230)	31.65 (1.246)	23.0 (0.906)	1210
257	25	24.0 (0.945)	26.4 (1.039)	32.25 (1.270)	32.65 (1.285)	24.0 (0.945)	1210
267	26	25.0 (0.984)	27.4 (1.079)	33.25 (1.309)	33.65 (1.325)	25.0 (0.984)	1100
277	27	26.0 (1.024)	28.4 (1.118)	34.25 (1.348)	34.65 (1.364)	26.0 (1.024)	1100
287	28	27.0 (1.063)	29.4 (1.157)	35.25 (1.388)	35.65 (1.404)	27.0 (1.063)	1100
297	29	28.0 (1.102)	30.4 (1.197)	36.25 (1.427)	36.65 (1.443)	28.0 1.102)	1100
00 6200 307 032 800	30	29.0 (1.142)	31.4 (1.236)	37.25 (1.467)	37.65 (1.482)	29.0 (1.142)	990

	Tolerance		
Kind	P	W	M
FFC	±0.05	±0.03	±0.1
FPC	±0.02	+0.07 -0.05	±0.05

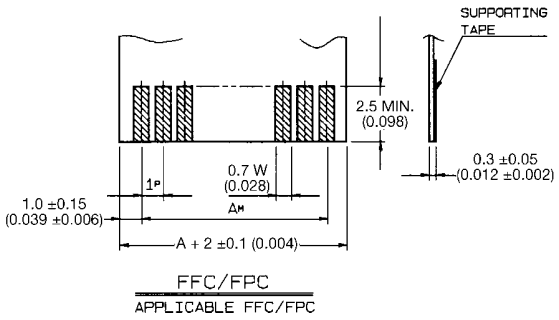

HOW TO ORDER

00	6200	XX7	032	800
		Number of Contacts	Variation Code	

032 = With Solder Tab

Please see page 54 for correct ordering code for parts on Tape and Reel of 032 Variation Code.

1.00mm Pitch

Series 6200 - Tape and Reel Package

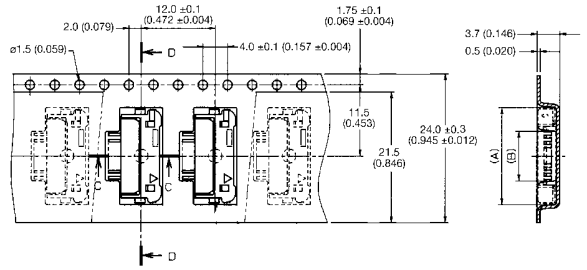

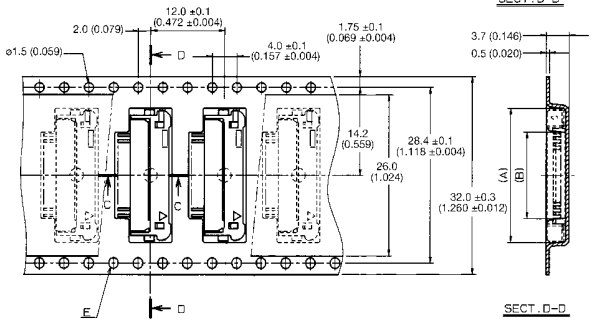

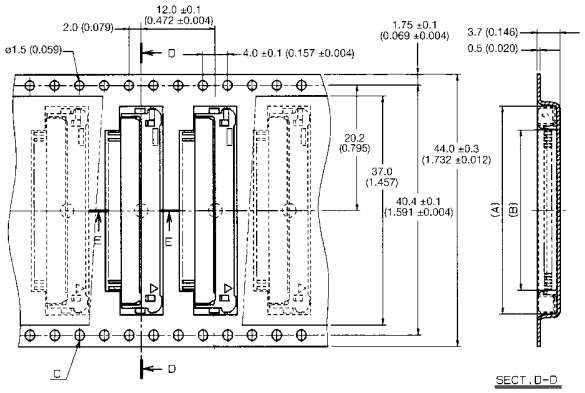

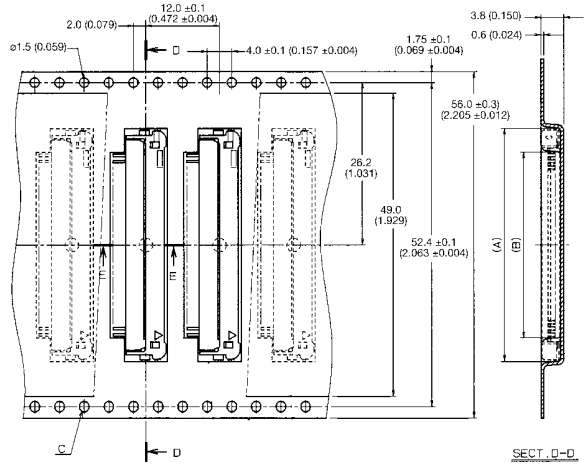

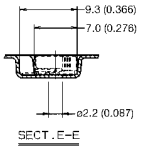

Assembly Number	No. of Contacts	A	B
00 6200 505 130 000	05	12.7 (0.500)	5.0 (0.197)
506	06	13.7 (0.539)	6.0 (0.236)
507	07	14.7 (0.579)	7.0 (0.276)
508	08	15.7 (0.618)	8.0 (0.315)
509	09	16.7 (0.658)	9.0 (0.354)
510	10	17.7 (0.697)	10.0 (0.394)
04 6200 511 130 000	11	18.7 (0.736)	11.0 (0.433)

Assembly Number	No. of Contacts	A	B
00 6200 512 230 000	12	19.7 (0.776)	12.0 (0.472)
513	13	20.7 (0.815)	13.0 (0.512)
514	14	21.7 (0.854)	14.0 (0.551)
515	15	22.7 (0.894)	15.0 (0.591)
00 6200 516 230 000	16	23.7 (0.933)	16.0 (0.630)

Assembly Number	No. of Contacts	A	B
00 6200 517 330 000	17	24.7 (0.972)	17.0 (0.669)
518	18	25.7 (1.012)	18.0 (0.709)
519	19	26.7 (1.051)	19.0 (0.748)
520	20	27.7 (1.091)	20.0 (0.787)
521	21	28.7 (1.130)	21.0 (0.827)
522	22	29.7 (1.169)	22.0 (0.866)
523	23	30.7 (1.209)	23.0 (0.906)
524	24	31.7 (1.248)	24.0 (0.945)
525	25	32.7 (1.287)	25.0 (0.984)
526	26	33.7 (1.327)	26.0 (1.024)
00 6200 527 330 000	27	34.7 (1.366)	27.0 (1.063)

Assembly Number	No. of Contacts	A	B
00 6200 528 430 000	28	35.7 (1.406)	28.0 (1.102)
00 6200 529 430 000	29	36.7 (1.445)	29.0 (1.142)
00 6200 530 430 000	30	37.7 (1.484)	30.0 (1.181)

HOW TO ORDER

00	6200	5XX	X30	000
		Number of Contacts	Variation Code	

1 = Emboss 24.0mm 3 = Emboss 44.0mm
2 = Emboss 32.0mm 4 = Emboss 56.0mm

NOTE – This is ordering code for
00 6200 XX7 032 800 on page 53.

1000 Connectors per Tape and Reel.

1.00mm Pitch

Series 6200 - ZIF Right Angle SMT (Bottom Contact Type)

WITH SOLDER TAB AND BOSS

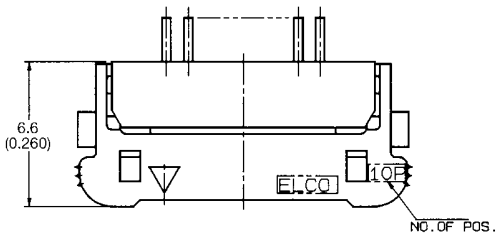

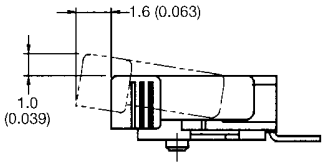

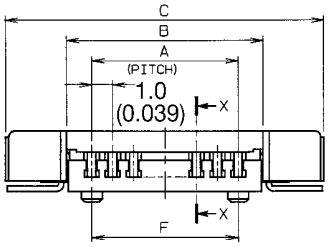

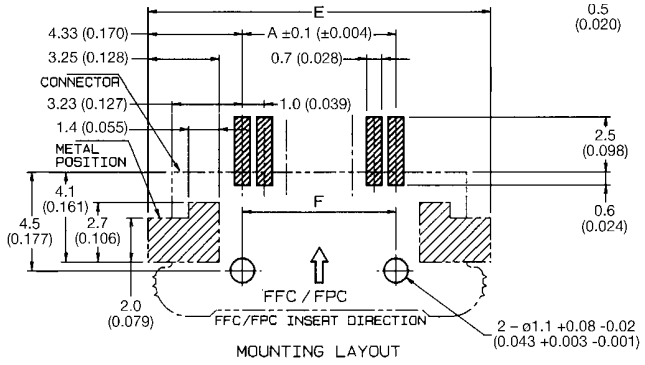

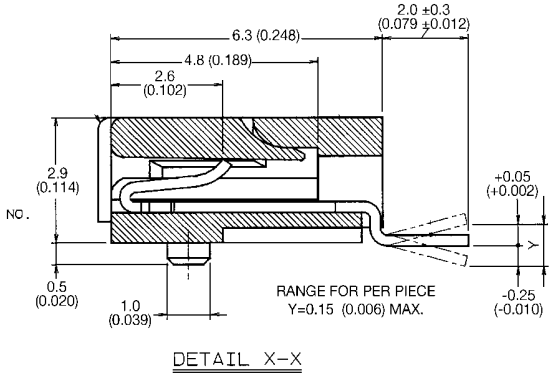

Assembly Number	No. of Contacts	A	B	C	E	F	Qty. Per Box
00 6200 057 052 800	05	4.0 (0.157)	6.4 (0.252)	12.25 (0.482)	12.65 (0.498)	4.0 (0.157)	3190
067	06	5.0 (0.197)	7.4 (0.291)	13.25 (0.522)	13.65 (0.537)	5.0 (0.197)	2970
077	07	6.0 (0.236)	8.4 (0.331)	14.25 (0.561)	14.65 (0.577)	6.0 (0.236)	2750
087	08	7.0 (0.276)	9.4 (0.370)	15.25 (0.600)	15.65 (0.616)	7.0 (0.276)	2530
097	09	8.0 (0.315)	10.4 (0.409)	16.25 (0.640)	16.65 (0.656)	8.0 (0.315)	2420
107	10	9.0 (0.354)	11.4 (0.449)	17.25 (0.679)	17.65 (0.695)	9.0 (0.354)	2310
117	11	10.0 (0.394)	12.4 (0.488)	18.25 (0.719)	18.65 (0.734)	10.0 (0.394)	2090
127	12	11.0 (0.433)	13.4 (0.528)	19.25 (0.758)	19.65 (0.774)	11.0 (0.433)	1980
137	13	12.0 (0.472)	14.4 (0.567)	20.25 (0.797)	20.65 (0.813)	12.0 (0.472)	1870
147	14	13.0 (0.512)	15.4 (0.606)	21.25 (0.837)	21.65 (0.852)	13.0 (0.512)	1760
157	15	14.0 (0.551)	16.4 (0.646)	22.25 (0.876)	22.65 (0.892)	14.0 (0.551)	1760
167	16	15.0 (0.591)	17.4 (0.685)	23.25 (0.915)	23.65 (0.931)	15.0 (0.591)	1650
177	17	16.0 (0.630)	18.4 (0.724)	24.25 (0.955)	24.65 (0.970)	16.0 (0.630)	1540
187	18	17.0 (0.669)	19.4 (0.764)	25.25 (0.994)	25.65 (1.010)	17.0 (0.669)	1540
197	19	18.0 (0.709)	20.4 (0.803)	26.25 (1.033)	26.65 (1.049)	18.0 (0.709)	1430
00 6200 207 052 800	20	19.0 (0.748)	21.4 (0.843)	27.25 (1.073)	27.65 (1.089)	19.0 (0.748)	1430
217	21	20.0 (0.787)	22.4 (0.882)	28.25 (1.112)	28.65 (1.128)	20.0 (0.787)	1320
227	22	21.0 (0.827)	23.4 (0.921)	29.25 (1.152)	29.65 (1.167)	21.0 (0.827)	1320
237	23	22.0 (0.866)	24.4 (0.961)	30.25 (1.191)	30.65 (1.207)	22.0 (0.866)	1210
247	24	23.0 (0.906)	25.4 (1.000)	31.25 (1.230)	31.65 (1.246)	23.0 (0.906)	1210
257	25	24.0 (0.945)	26.4 (1.039)	32.25 (1.270)	32.65 (1.285)	24.0 (0.945)	1210
267	26	25.0 (0.984)	27.4 (1.079)	33.25 (1.309)	33.65 (1.325)	25.0 (0.984)	1100
277	27	26.0 (1.024)	28.4 (1.118)	34.25 (1.348)	34.65 (1.364)	26.0 (1.024)	1100
287	28	27.0 (1.063)	29.4 (1.157)	35.25 (1.388)	35.65 (1.404)	27.0 (1.063)	1100
297	29	28.0 (1.102)	30.4 (1.197)	36.25 (1.427)	36.65 (1.443)	28.0 (1.102)	1100
00 6200 307 052 800	30	29.0 (1.142)	31.4 (1.236)	37.25 (1.467)	37.65 (1.482)	29.0 (1.142)	990

HOW TO ORDER

00 **6200** **XX7** **052** **800**

Number of Contacts

Variation Code
052 = With Solder Tab/Boss

1.00mm Pitch
Series 6200 - ZIF Right Angle Through Hole (Bottom Contact Type)

DIP THROUGH HOLE

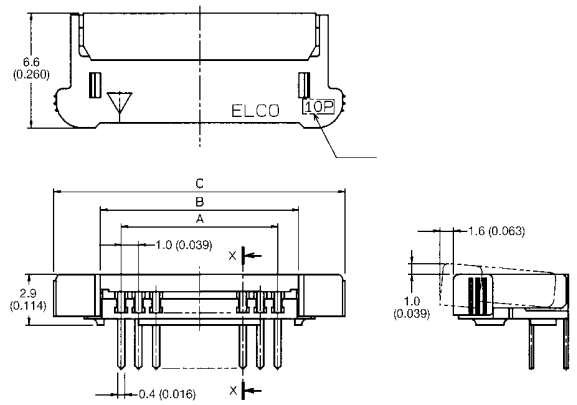

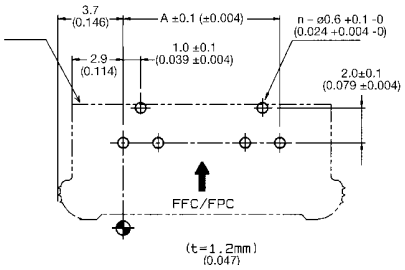

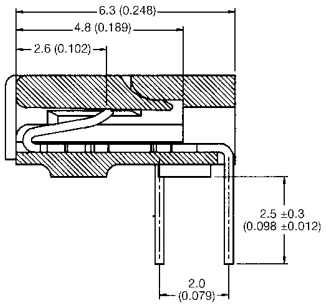

SECT. X-X

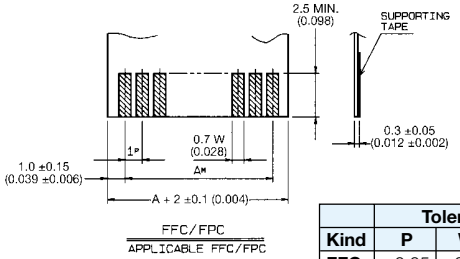

	Tolerance		
Kind	P	W	M
FFC	±0.05	±0.03	±0.1
FPC	±0.02	+0.07 -0.05	±0.05

Specifications

- Number of Contacts – 5-30
- Tray Packaged / Box, Tape & Reel
- Voltage – 50V
- Current Rating – 1.0 amp max.
- Dielectric Withstanding Voltage – 500V RMS min.
- Operating Temperature – (-20°C - +85°C)
- Contact Material – phosphor bronze (tin-lead plated)
- Insulator & Slider Material – PPS, brown color (UL 94 V-O)
- FFC/FPC Thickness – 0.3 ±0.05mm (0.012 ±0.002")
- Profile Height – 2.90mm (0.114")

No. of Contacts	Dimension				Qty. Per Box
	A	B	C	D	
05	4.0 (0.157)	6.4 (0.252)	11.45 (0.451)	4.0 (0.157)	3100
06	5.0 (0.197)	7.4 (0.291)	12.45 (0.490)	5.0 (0.197)	2800
07	6.0 (0.236)	8.4 (0.331)	13.45 (0.530)	6.0 (0.236)	2600
08	7.0 (0.276)	9.4 (0.370)	14.45 (0.569)	7.0 (0.276)	2500
09	8.0 (0.315)	10.4 (0.409)	15.45 (0.608)	8.0 (0.315)	2300
10	9.0 (0.354)	11.4 (0.449)	16.45 (0.648)	9.0 (0.354)	2200
11	10.0 (0.394)	12.4 (0.488)	17.45 (0.687)	10.0 (0.394)	2000
12	11.0 (0.433)	13.4 (0.528)	18.45 (0.726)	11.0 (0.433)	1900
13	12.0 (0.472)	14.4 (0.567)	19.45 (0.766)	12.0 (0.472)	1800
14	13.0 (0.512)	15.4 (0.606)	20.45 (0.805)	13.0 (0.512)	1700
15	14.0 (0.551)	16.4 (0.646)	21.45 (0.844)	14.0 (0.551)	1600
16	15.0 (0.591)	17.4 (0.685)	22.45 (0.884)	15.0 (0.591)	1600
17	16.0 (0.630)	18.4 (0.724)	23.45 (0.923)	16.0 (0.630)	1500
18	17.0 (0.669)	19.4 (0.764)	24.45 (0.963)	17.0 (0.669)	1400
19	18.0 (0.709)	20.4 (0.803)	25.45 (1.002)	18.0 (0.709)	1400
20	19.0 (0.748)	21.4 (0.843)	26.45 (1.041)	19.0 (0.748)	1300
21	20.0 (0.787)	22.4 (0.882)	27.45 (1.081)	20.0 (0.787)	1300
22	21.0 (0.827)	23.4 (0.921)	28.45 (1.120)	21.0 (0.827)	1200
23	22.0 (0.866)	24.4 (0.961)	29.45 (1.159)	22.0 (0.866)	1200
24	23.0 (0.906)	25.4 (1.000)	30.45 (1.199)	23.0 (0.906)	1100
25	24.0 (0.945)	26.4 (1.039)	31.45 (1.238)	24.0 (0.945)	1100
26	25.0 (0.984)	27.4 (1.079)	32.45 (1.278)	25.0 (0.984)	1100
27	26.0 (1.024)	28.4 (1.118)	33.45 (1.317)	26.0 (1.024)	1000
28	27.0 (1.063)	29.4 (1.157)	34.45 (1.356)	27.0 (1.063)	1000
29	28.0 (1.102)	30.4 (1.197)	35.45 (1.396)	28.0 (1.102)	1000
30	29.0 (1.142)	31.4 (1.236)	36.45 (1.435)	29.0 (1.142)	900

HOW TO ORDER

00	6200	XX7	012	800
		Number of Contacts		

1.00mm Pitch
Series 6224 - ZIF Right Angle SMT (Top Contact Type)

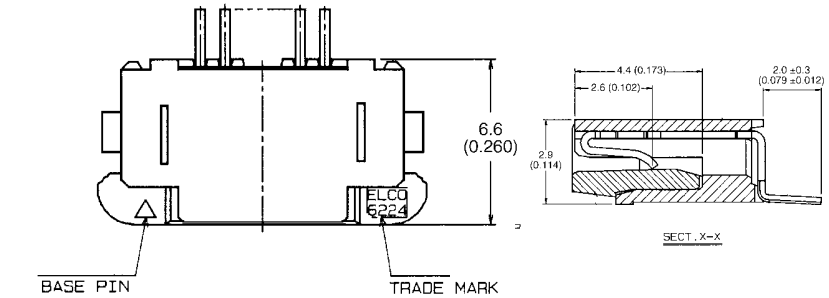

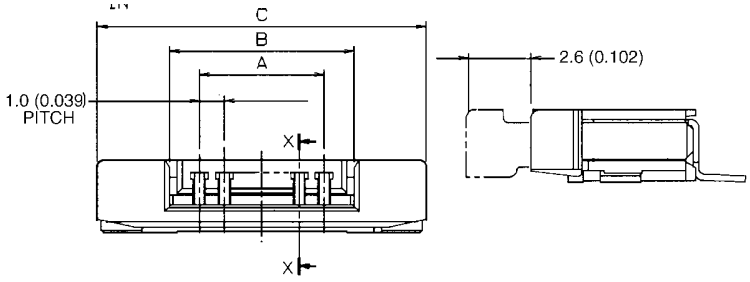

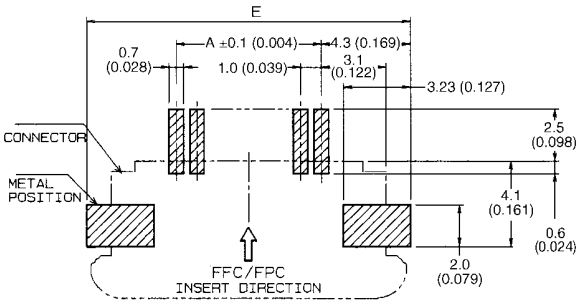

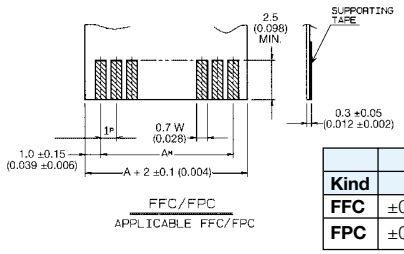

Kind	Tolerance		
	P	W	M
FFC	±0.05	±0.03	±0.1
FPC	±0.02	+0.07 -0.05	±0.05

Specifications

- Number of Contacts – 5-30
- Tray Packaged/Box, Tape & Reel
- Voltage – 50V
- Current Rating – 1.0 amp max.
- Dielectric Withstanding Voltage – 500V RMS min.
- Operating Temperature – (-20°C - +85°C)
- Contact & Metal Tab Material – phosphor bronze (tin-lead plated)
- Insulator Material – PPS, brown color (UL 94 V-O)
- Slider Material – PPS, black color (UL 94 V-O)
- FFC/FPC Thickness – 0.3 ±0.05mm (0.012 ±0.002")
- Profile Height – 2.90mm (0.114")

Assembly Number	No. of Contacts	A	B	C	D	E	Qty. Per Box
00 6224 005 001 800	05	4.0 (0.157)	6.2 (0.244)	12.2 (0.480)	11.9 (0.469)	12.6 (0.496)	3393
00 6224 006 001 800	06	5.0 (0.197)	7.2 (0.283)	13.2 (0.520)	12.9 (0.508)	13.6 (0.535)	3159
00 6224 007 001 800	07	6.0 (0.236)	8.2 (0.323)	14.2 (0.559)	13.9 (0.547)	14.6 (0.575)	2925
00 6224 008 001 800	08	7.0 (0.276)	9.2 (0.362)	15.2 (0.598)	14.9 (0.587)	15.6 (0.614)	2691
00 6224 009 001 800	09	8.0 (0.315)	10.2 (0.402)	16.2 (0.638)	15.9 (0.626)	16.6 (0.654)	2574
00 6224 010 001 800	10	9.0 (0.354)	11.2 (0.441)	17.2 (0.677)	16.9 (0.665)	17.6 (0.693)	2457
00 6224 011 001 800	11	10.0 (0.394)	12.2 (0.480)	18.2 (0.717)	17.9 (0.705)	18.6 (0.732)	2223
00 6224 012 001 800	12	11.0 (0.433)	13.2 (0.520)	19.2 (0.756)	18.9 (0.744)	19.6 (0.772)	2106
00 6224 013 001 800	13	12.0 (0.472)	14.2 (0.559)	20.2 (0.795)	19.9 (0.783)	20.6 (0.811)	1989
00 6224 014 001 800	14	13.0 (0.512)	15.2 (0.598)	21.2 (0.835)	20.9 (0.823)	21.6 (0.850)	1989
00 6224 015 001 800	15	14.0 (0.551)	16.2 (0.638)	22.2 (0.874)	21.9 (0.862)	22.6 (0.890)	1872
00 6224 016 001 800	16	15.0 (0.591)	17.2 (0.677)	23.2 (0.913)	22.9 (0.902)	23.6 (0.929)	1755
00 6224 017 001 800	17	16.0 (0.630)	18.2 (0.717)	24.2 (0.953)	23.9 (0.941)	24.6 (0.969)	1755
00 6224 018 001 800	18	17.0 (0.669)	19.2 (0.756)	25.2 (0.992)	24.9 (0.980)	25.6 (1.008)	1638
00 6224 019 001 800	19	18.0 (0.709)	20.2 (0.795)	26.2 (1.031)	25.9 (1.020)	26.6 (1.047)	1521
00 6224 020 001 800	20	19.0 (0.748)	21.2 (0.835)	27.2 (1.071)	26.9 (1.059)	27.6 (1.087)	1521
00 6224 021 001 800	21	20.0 (0.787)	22.2 (0.874)	28.2 (1.110)	27.9 (1.098)	28.6 (1.126)	1404
00 6224 022 001 800	22	21.0 (0.827)	23.2 (0.913)	29.2 (1.150)	28.9 (1.138)	29.6 (1.165)	1404
00 6224 023 001 800	23	22.0 (0.866)	24.2 (0.953)	30.2 (1.189)	29.9 (1.177)	30.6 (1.205)	1404
00 6224 024 001 800	24	23.0 (0.906)	25.2 (0.992)	31.2 (1.228)	30.9 (1.217)	31.6 (1.244)	1287
00 6224 025 001 800	25	24.0 (0.945)	26.2 (1.031)	32.2 (1.268)	31.9 (1.256)	32.6 (1.283)	1287
00 6224 026 001 800	26	25.0 (0.984)	27.2 (1.071)	33.2 (1.307)	32.9 (1.295)	33.6 (1.323)	1170
00 6224 027 001 800	27	26.0 (1.024)	28.2 (1.110)	34.2 (1.346)	33.9 (1.335)	34.6 (1.362)	1170
00 6224 028 001 800	28	27.0 (1.063)	29.2 (1.150)	35.2 (1.386)	34.9 (1.374)	35.6 (1.402)	1170
00 6224 029 001 800	29	28.0 (1.102)	30.2 (1.189)	36.2 (1.425)	35.9 (1.413)	36.6 (1.441)	1170
00 6224 030 001 800	30	29.0 (1.142)	31.2 (1.228)	37.2 (1.465)	36.9 (1.453)	37.6 (1.480)	1053

HOW TO ORDER

00	6224	0XX	001	800
		Number of Contacts		

See page 58 for ordering in Tape and Reel.

1.00mm Pitch

Series 6224 - Tape and Reel Package

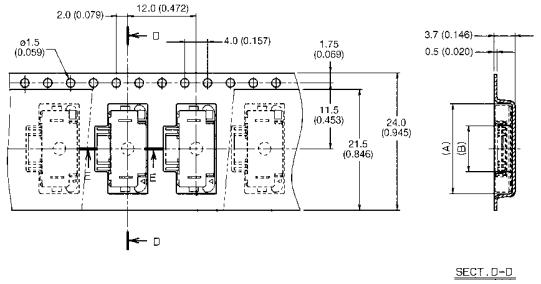

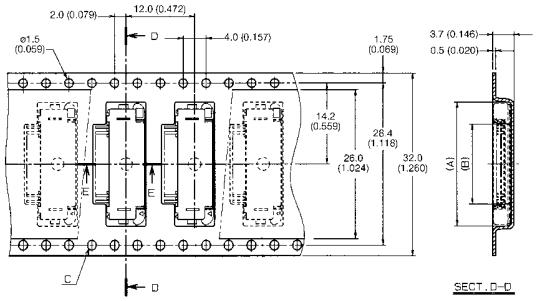

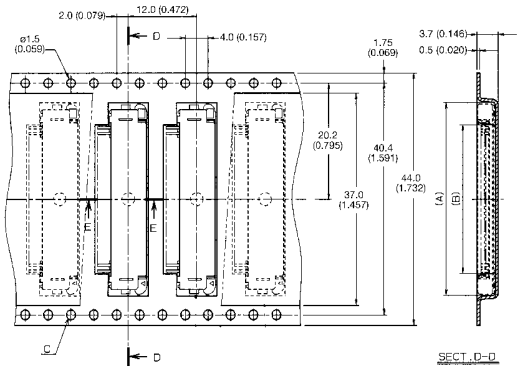

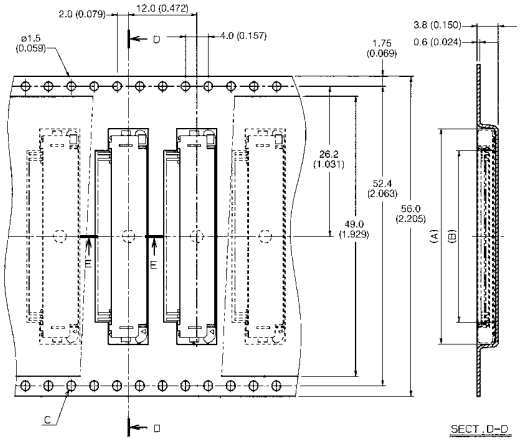

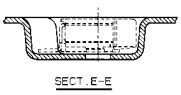

Assembly Number	No. of Contacts	A	B
08 6224 005 001 800	05	12.7 (0.500)	5.0 (0.197)
006	06	13.7 (0.539)	6.0 (0.236)
007	07	14.7 (0.579)	7.0 (0.276)
008	08	15.7 (0.618)	8.0 (0.315)
009	09	16.7 (0.658)	9.0 (0.354)
010	10	17.7 (0.697)	10.0 (0.394)
08 6224 011 001 800	11	18.7 (0.736)	11.0 (0.433)

Assembly Number	No. of Contacts	A	B
08 6224 012 001 800	12	19.7 (0.776)	12.0 (0.472)
013	13	20.7 (0.815)	13.0 (0.512)
014	14	21.7 (0.854)	14.0 (0.551)
015	15	22.7 (0.894)	15.0 (0.591)
08 6224 016 001 800	16	23.7 (0.933)	16.0 (0.630)

Assembly Number	No. of Contacts	A	B
08 6224 017 001 800	17	24.7 (0.972)	17.0 (0.669)
018	18	25.7 (1.012)	18.0 (0.709)
019	19	26.7 (1.051)	19.0 (0.748)
020	20	27.7 (1.091)	20.0 (0.787)
021	21	28.7 (1.130)	21.0 (0.827)
022	22	29.7 (1.169)	22.0 (0.866)
023	23	30.7 (1.209)	23.0 (0.906)
024	24	31.7 (1.248)	24.0 (0.945)
025	25	32.7 (1.287)	25.0 (0.984)
026	26	33.7 (1.327)	26.0 (1.024)
08 6224 027 001 800	27	34.7 (1.366)	27.0 (1.063)

Assembly Number	No. of Contacts	A	B
08 6224 028 001 800	28	35.7 (1.406)	28.0 (1.102)
08 6224 029 001 800	29	36.7 (1.445)	29.0 (1.142)
08 6224 030 001 800	30	37.7 (1.484)	30.0 (1.181)

HOW TO ORDER

08	6224	0XX	001	800

Number of Contacts

1000 Connectors per Tape and Reel.

1.00mm Pitch

Series 6208 - ZIF Vertical SMT

WITHOUT BOSS

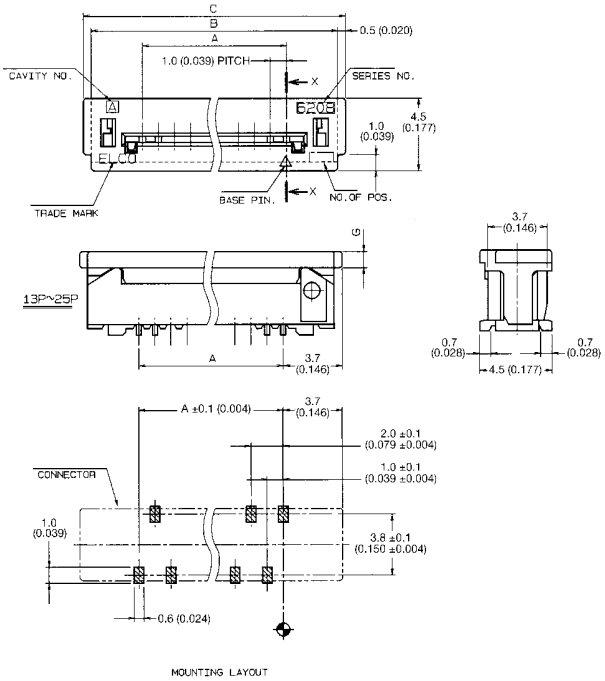

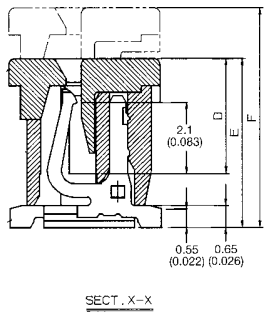

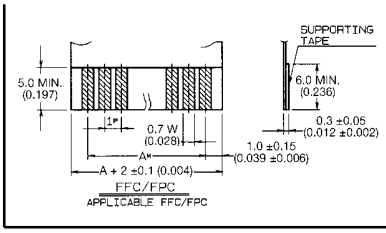

	Tolerance		
Kind	P	W	M
FFC	±0.05	±0.03	±0.1
FPC	±0.02	+0.07 -0.05	±0.05

WITH BOSS

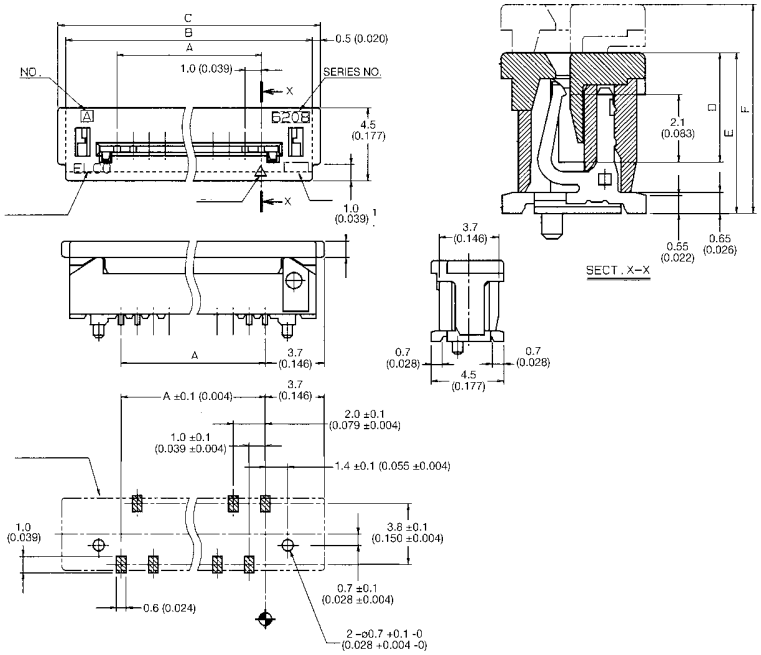

No. of Contacts	Assembly Number	A	B	C	D	E	F	G	Qty. Per Box
05	00 6208 XXX 005 000	4.0 (0.157)	10.4 (0.409)	11.4 (0.449)	3.4 (0.134)	5.0 (0.197)	6.5 (0.256)	0.8 (0.031)	3100
06	006	5.0 (0.197)	11.4 (0.449)	12.4 (0.488)					2900
07	007	6.0 (0.236)	12.4 (0.488)	13.4 (0.528)					2700
08	008	7.0 (0.276)	13.4 (0.528)	14.4 (0.567)					2500
09	009	8.0 (0.315)	14.4 (0.567)	15.4 (0.606)					2300
10	010	9.0 (0.354)	15.4 (0.606)	16.4 (0.646)					2200
11	011	10.0 (0.394)	16.4 (0.646)	17.4 (0.685)					2000
12	012	11.0 (0.433)	17.4 (0.685)	18.4 (0.724)					1900
13	013	12.0 (0.472)	18.4 (0.724)	19.4 (0.764)					1800
14	014	13.0 (0.512)	19.4 (0.764)	20.4 (0.803)					1700
15	015	14.0 (0.551)	20.4 (0.803)	21.4 (0.843)					1600
16	016	15.0 (0.591)	21.4 (0.843)	22.4 (0.882)					1600
17	017	16.0 (0.630)	22.4 (0.882)	23.4 (0.921)					1500
18	018	17.0 (0.669)	23.4 (0.921)	24.4 (0.961)					1400
19	019	18.0 (0.709)	24.4 (0.961)	25.4 (1.000)					1400
20	020	19.0 (0.748)	25.4 (1.000)	26.4 (1.039)	3.4 (0.134)	5.0 (0.197)	6.5 (0.256)	0.8 (0.031)	1300
21	021	20.0 (0.787)	26.4 (1.039)	27.4 (1.079)	3.6 (0.142)	5.2 (0.205)	6.7 (0.264)	1.0 (0.039)	1300
22	022	21.0 (0.827)	27.4 (1.079)	28.4 (1.118)					1200
23	023	22.0 (0.866)	28.4 (1.118)	29.4 (1.157)					1200
24	024	23.0 (0.906)	29.4 (1.157)	30.4 (1.197)					1100
25	025	24.0 (0.945)	30.4 (1.197)	31.4 (1.236)	3.6 (0.142)	5.2 (0.205)	6.7 (0.264)	1.0 (0.039)	1100
26	00 6208 500 026 600	25.0 (0.984)	31.4 (1.236)	32.4 (1.276)	3.9 (0.154)	5.5 (0.217)	7.0 (0.276)	1.3 (0.051)	1100
28	00 6208 500 028 600	27.0 (1.063)	33.4 (1.315)	34.4 (1.354)	3.9 (0.154)	5.5 (0.217)	7.0 (0.276)	1.3 (0.051)	1000
30	00 6208 500 030 600	29.0 (1.142)	35.4 (1.394)	36.4 (1.433)	3.9 (0.154)	5.5 (0.217)	7.0 (0.276)	1.3 (0.051)	900

HOW TO ORDER

00 **6208** **XXX** **0XX** **000**

Variation Code
500 = SMT Without Boss
520 = SMT With Boss

Number of Contacts

NOTE – Elco standard for the 500 Variation Code is Tape and Reel, see page 60 to order.
– 26, 28 and 30 pin are only available without boss.
– and with wide slider, see page 60 to order in Tape and Reel.

1.00mm Pitch

Series 6208 - Tape and Reel Package

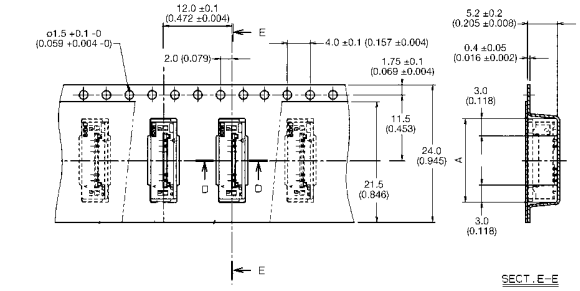

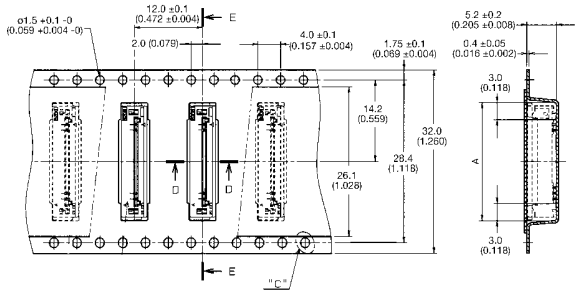

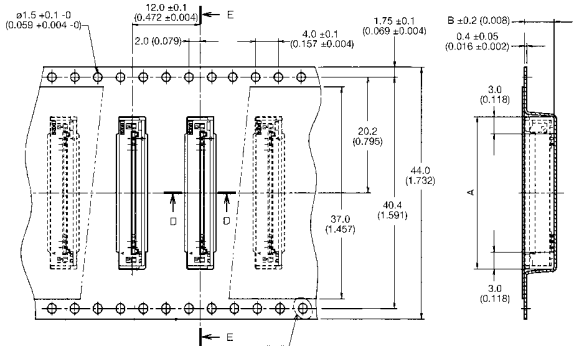

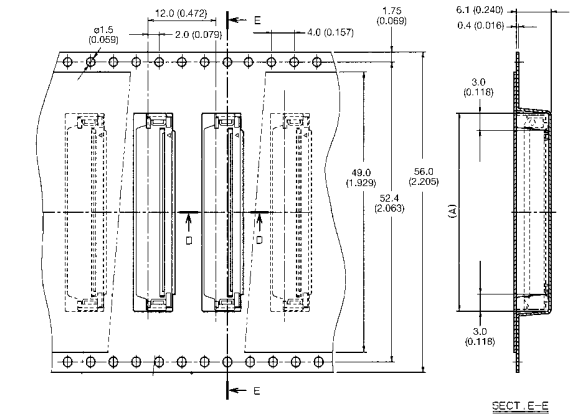

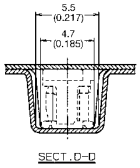

Assembly Number	No. of Contacts	A
00 6208 505 110 000	05	11.6 (0.457)
506	06	12.6 (0.496)
507	07	13.6 (0.535)
508	08	14.6 (0.575)
509	09	15.6 (0.614)
00 6208 510 110 000	10	16.6 (0.654)

Assembly Number	No. of Contacts	A
00 6208 511 210 000	11	17.6 (0.693)
512	12	18.6 (0.732)
513	13	19.6 (0.772)
514	14	20.6 (0.811)
515	15	21.6 (0.850)
00 6208 516 210 000	16	22.6 (0.890)

Assembly Number	No. of Contacts	A
00 6208 517 310 000	17	23.6 (0.929)
518	18	24.6 (0.969)
519	19	25.6 (1.008)
520	20	26.6 (1.047)
521	21	27.6 (1.087)
522	22	28.6 (1.126)
523	23	29.6 (1.165)
524	24	30.6 (1.205)
525	25	31.6 (1.244)
00 6208 526 310 000	26	32.6 (1.283)

Assembly Number	No. of Contacts	A
00 6208 528 410 006	28	34.7 (1.366)
00 6208 530 410 006	30	36.7 (1.445)

HOW TO ORDER

00	6208	5XX	X10	000

Number of Contacts

Variation Code
1 = Emboss 24.0mm
2 = Emboss 32.0mm
3 = Emboss 44.0mm
4 = Emboss 56.0mm

1000 Connectors per Tape and Reel.

1.00mm Pitch

Series 6208 - ZIF Vertical Through Hole

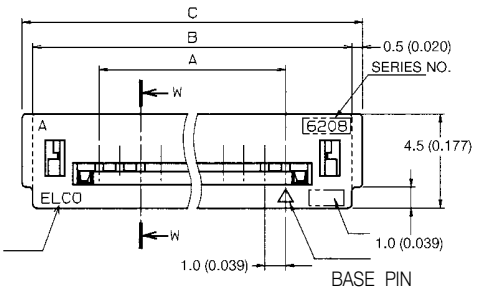

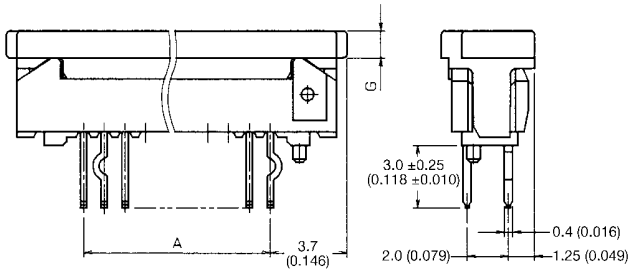

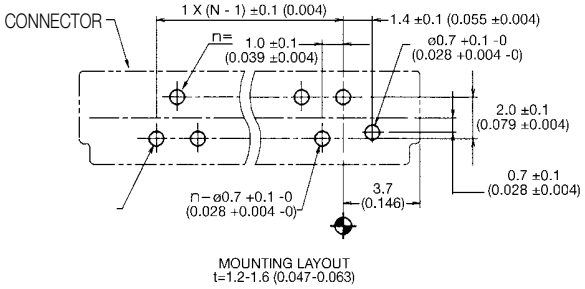

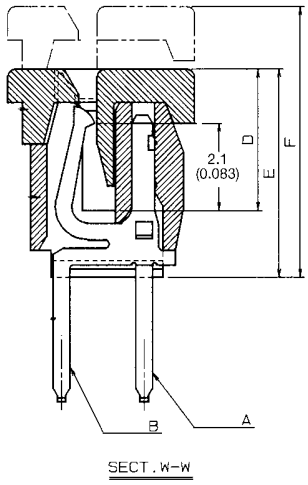

Specifications

- Number of Contacts – 5-30
- Tray Packaged /Box, Tape & Reel
- Voltage – 50V
- Current Rating – 1.0 amp max.
- Dielectric Withstanding Voltage – 500V RMS min.
- Operating Temperature – (-30°C - +85°C)
- Contact Material – phosphor bronze (tin-lead plated)
- Insulator Material – glass-filled nylon, PPS
- Slider Material – PPS (UL 94 V-O)
- FFC/FPC Thickness – 0.3 ±0.05mm (0.012 ±0.002")
- PCB Thickness – 1.2-1.6mm (0.047-0.063")
- Profile Height – See "E" dimension

	Tolerance		
Kind	P	W	M
FFC	±0.05	±0.03	±0.1
FPC	±0.02	+0.07 -0.05	±0.05

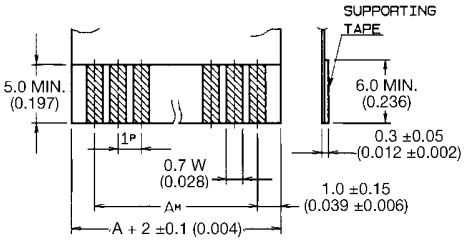

No. of Contacts	Assembly Number	A	B	C	D	E	F	G	Qty. Per Box
05	00 6208 XX0 105 001	4.0 (0.157)	10.4 (0.409)	11.4 (0.449)	3.4 (0.134)	5.0 (0.197)	6.5 (0.256)	0.8 (0.031)	3100
06	106	5.0 (0.197)	11.4 (0.449)	12.4 (0.488)					2900
07	107	6.0 (0.236)	12.4 (0.488)	13.4 (0.528)					2700
08	108	7.0 (0.276)	13.4 (0.528)	14.4 (0.567)					2500
09	109	8.0 (0.315)	14.4 (0.567)	15.4 (0.606)					2300
10	110	9.0 (0.354)	15.4 (0.606)	16.4 (0.646)					2200
11	111	10.0 (0.394)	16.4 (0.646)	17.4 (0.685)					2000
12	112	11.0 (0.433)	17.4 (0.685)	18.4 (0.724)					1900
13	113	12.0 (0.472)	18.4 (0.724)	19.4 (0.764)					1800
14	114	13.0 (0.512)	19.4 (0.764)	20.4 (0.803)					1700
15	115	14.0 (0.551)	20.4 (0.803)	21.4 (0.843)					1600
16	116	15.0 (0.591)	21.4 (0.843)	22.4 (0.882)					1600
17	117	16.0 (0.630)	22.4 (0.882)	23.4 (0.921)					1500
18	118	17.0 (0.669)	23.4 (0.921)	24.4 (0.961)					1400
19	119	18.0 (0.709)	24.4 (0.961)	25.4 (1.000)					1400
20	120	19.0 (0.748)	25.4 (1.000)	26.4 (1.039)	3.4 (0.134)	5.0 (0.197)	6.5 (0.256)	0.8 (0.031)	1300
21	121	20.0 (0.787)	26.4 (1.039)	27.4 (1.079)	3.6 (0.142)	5.2 (0.205)	6.7 (0.264)	1.0 (0.039)	1300
22	122	21.0 (0.827)	27.4 (1.079)	28.4 (1.118)					1200
23	123	22.0 (0.866)	28.4 (1.118)	29.4 (1.157)					1200
24	124	23.0 (0.906)	29.4 (1.157)	30.4 (1.197)					1100
25	00 6208 XX0 125 001	24.0 (0.945)	30.4 (1.197)	31.4 (1.236)	3.6 (0.142)	5.2 (0.205)	6.7 (0.264)	1.0 (0.039)	1100
26	00 6208 XX0 126 001	25.0 (0.984)	31.4 (1.236)	32.4 (1.276)	3.9 (0.154)	5.5 (0.217)	7.0 (0.276)	1.3 (0.051)	1100
27	127	26.0 (1.024)	32.4 (1.276)	33.4 (1.315)					1000
28	128	27.0 (1.063)	33.4 (1.315)	34.4 (1.354)					1000
29	129	28.0 (1.102)	34.4 (1.354)	35.4 (1.394)					1000
30	00 6208 XX0 130 001	29.0 (1.142)	35.4 (1.394)	36.4 (1.433)	3.9 (0.154)	5.5 (0.217)	7.0 (0.276)	1.3 (0.051)	900

HOW TO ORDER

00 **6208** **XX0** **1XX** **001**

0 = With Kinked Leg
1 = Without Kinked Leg

0 = Without Boss
1 = With Boss

Number of Contacts

1.00mm Pitch

Series 6229 - ZIF Vertical Through Hole

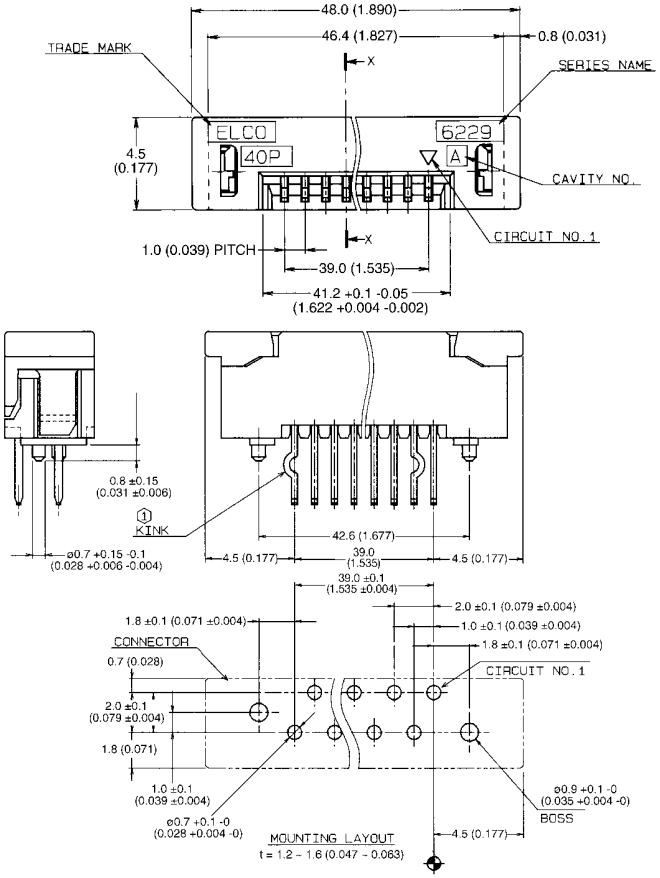

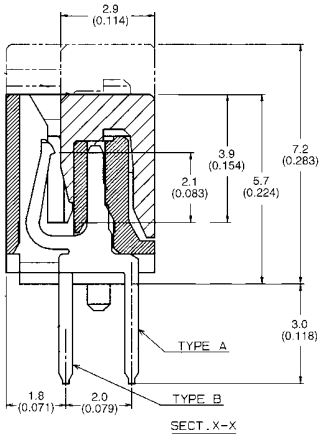

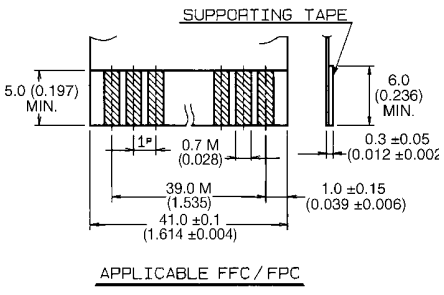

	Tolerance		
Kind	P	W	M
FFC	±0.05	±0.03	±0.1
FPC	±0.02	+0.07 -0.05	±0.05

Specifications

- Number of Contacts – 40 only available
- Tray Packaged
- Voltage – 50V
- Current Rating – 1.0 amp max.
- Dielectric Withstanding Voltage – 500V RMS min.
- Operating Temperature – (-40°C - +85°C)
- Contact Material – phosphor bronze (tin-lead plated)
- Insulator Material – PPS, black color (UL 94 V-O)
- Slider Material – PPS, natural color (UL 94 V-O)
- FFC/FPC Thickness – 0.3 ±0.05 mm (0.012 ±0.002")
- Profile Height – 5.70mm

HOW TO ORDER

00	6229	640	003	800
		Number of Contacts		

700 Pieces per Box.

1.00mm Pitch

Series 6229 - ZIF Vertical SMT

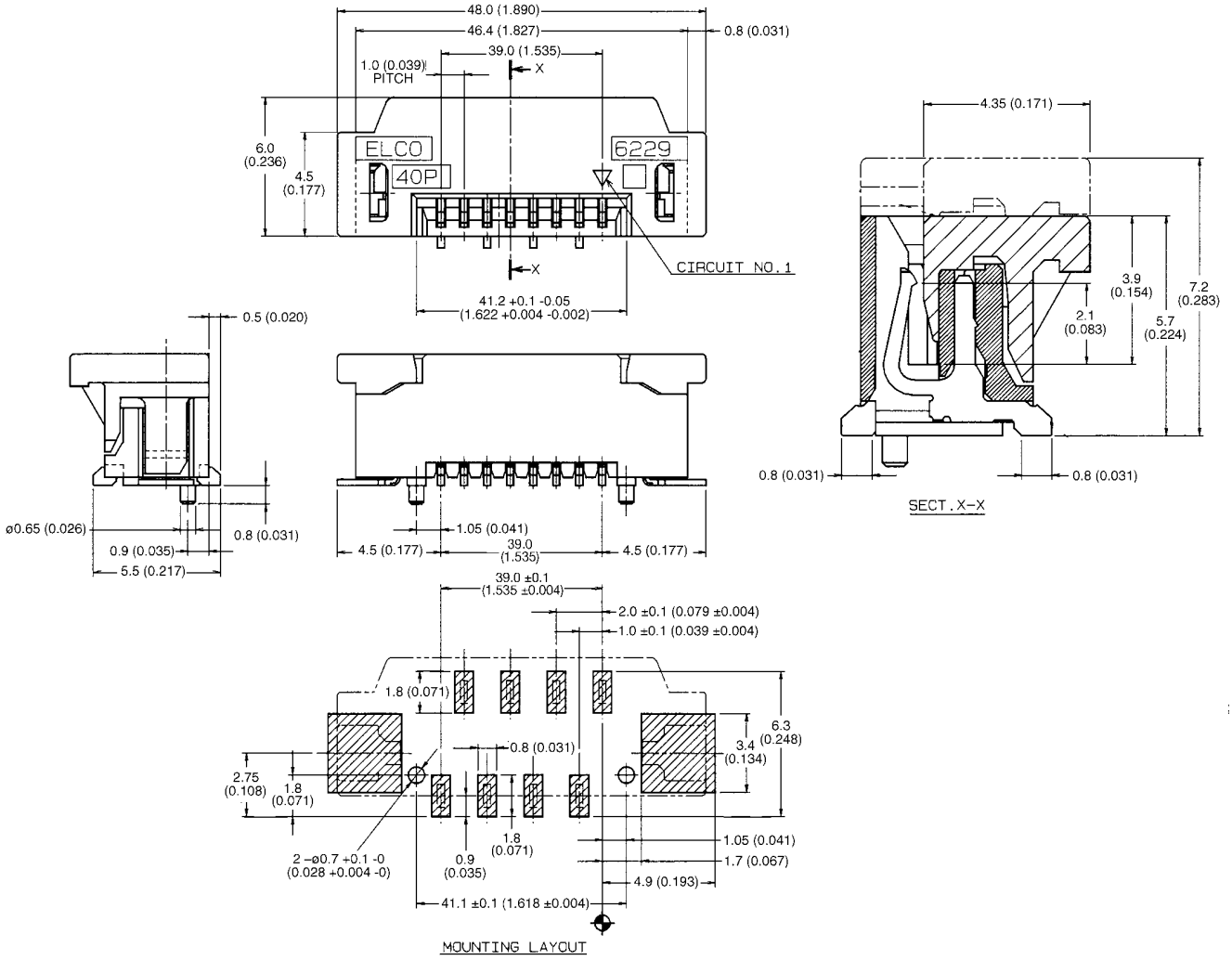

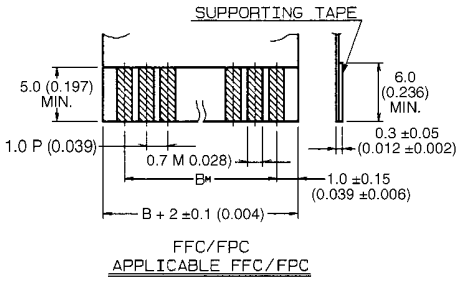

	Tolerance		
Kind	**P**	**W**	**M**
FFC	±0.05	±0.03	±0.1
FPC	±0.02	+0.07 -0.05	±0.05

HOW TO ORDER

00	6229	040	00X	800
		Number of Contacts	**Variation Code** 1 = Without Boss 2 = With Boss	

700 Pieces per Box.

1.00mm Pitch

Series 6248 - ZIF Vertical SMT

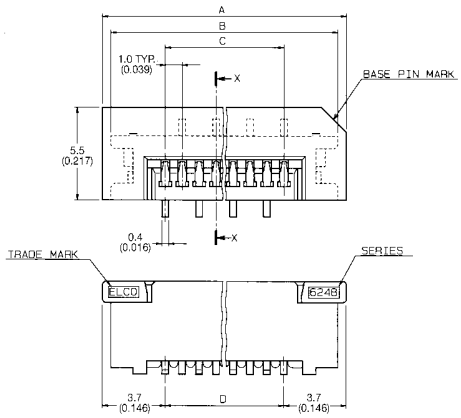

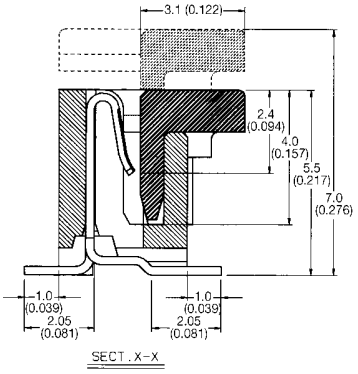

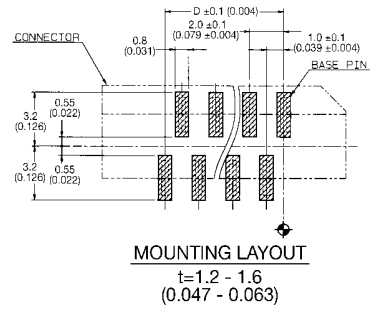

MOUNTING LAYOUT
t=1.2 - 1.6
(0.047 - 0.063)

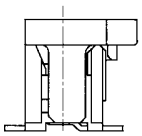

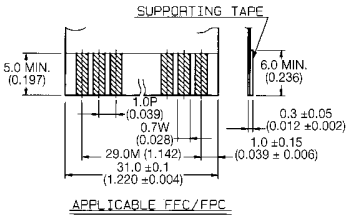

Specifications

- Number of Contacts – 24 and 30 only available
- Tape & Reel
- Voltage – 50V
- Current Rating – 0.5 amp max.
- Dielectric Withstanding Voltage – 500V RMS min.
- Operating Temperature – (-40°C - +85°C)
- Contact Material – phosphor bronze (tin-lead plated)
- Insulator Material – glass-filled PPS (UL 94 V-O)
- FFC/FPC Thickness – 0.3 ±0.05mm (0.012 ±0.002")
- Profile Height – 3.0mm - 5.5mm

	Tolerance		
Kind	P	W	M
FFC	±0.05	±0.03	±0.1
FPC	±0.02	+0.07 -0.05	±0.05

No. of Contacts	Dimension			
	A	B	C	D
24	30.4 (1.197)	29.4 (1.157)	23.0 (0.906)	23.0 0.906)
30	36.4 (1.433)	35.4 (1.394)	29.0 (1.142)	29.0 (1.142)

TAPE AND REEL PACKAGE

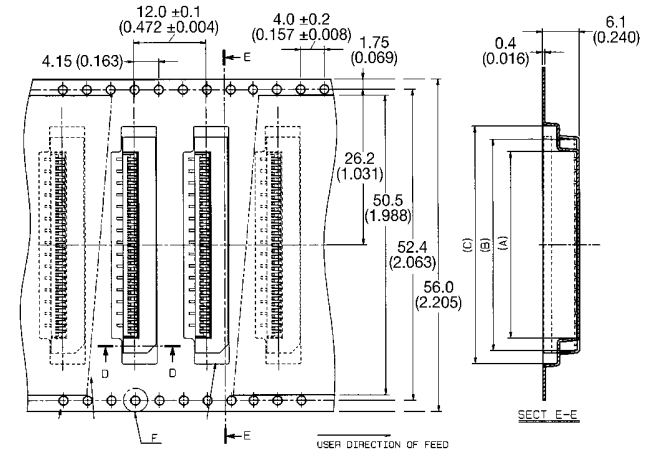

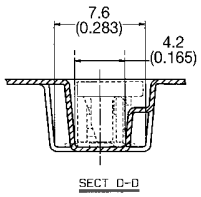

No. of Contacts	Dimension		
	A	B	C
24	25.4 (1.000)	29.6 (1.165)	34.0 (1.339)
30	31.4 (1.236)	35.6 (1.402)	40.0 (1.575)

HOW TO ORDER

04	6248	0XX	001	800

Number of Contacts

900 Connectors per Tape and Reel.

1.00mm Pitch
Series 6226 - LIF Vertical SMT (Dual Sided Contact Type)

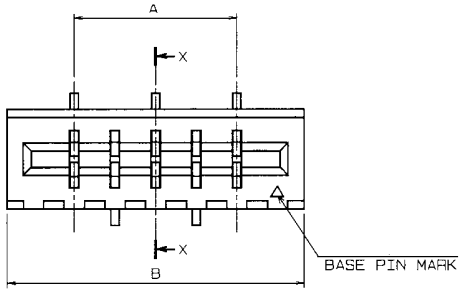

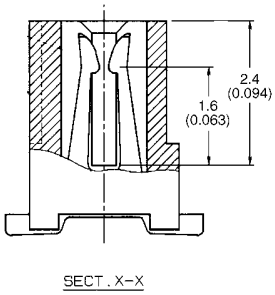

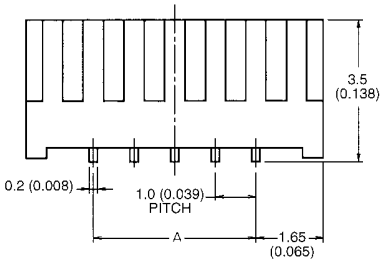

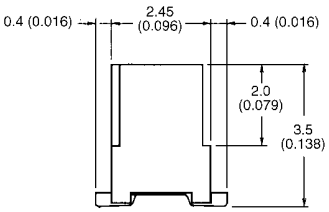

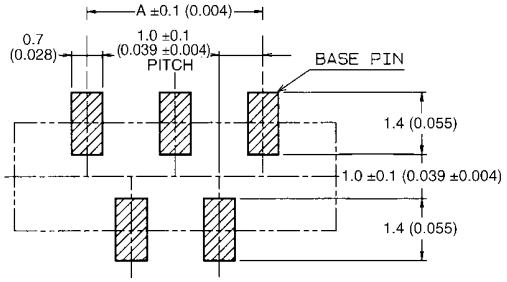

MOUNTING LAYOUT (CONN. MOUNTING SIDE)

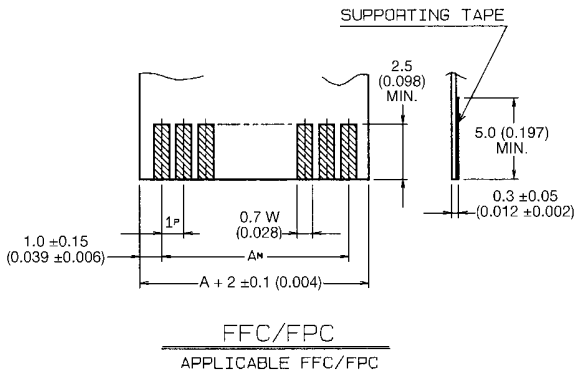

FFC/FPC
APPLICABLE FFC/FPC

	Tolerance		
Kind	P	W	M
FFC	±0.05	±0.03	±0.1
FPC	±0.02	+0.07 -0.05	±0.05

Specifications

- Number of Contacts – 4-20
- Tray Packaged
- Some sizes available Tape & Reeled – Contact Sales Office
- Voltage – 50V
- Current Rating – 1.0 amp max.
- Dielectric Withstanding Voltage – 500V RMS min.
- Operating Temperature – (-20°C - +85°C)
- Contact Material – phosphor bronze (tin-lead plated)
- Insulator Material – glass-filled nylon
- FFC/FPC Thickness – 0.3 ±0.05mm (0.012 ±0.002")
- Profile Height – 3.50mm (0.138")

Assembly Number	No. of Contacts	A	B	Qty. Per Box
00 6226 004 001 800	04	3.0 (0.118)	6.3 (0.248)	6840
005	05	4.0 (0.157)	7.3 (0.287)	5760
006	06	5.0 (0.197)	8.3 (0.327)	5160
007	07	6.0 (0.236)	9.3 (0.366)	4680
008	08	7.0 (0.276)	10.3 (0.406)	4200
009	09	8.0 (0.315)	11.3 (0.445)	3840
010	10	9.0 (0.354)	12.3 (0.484)	3360
011	11	10.0 (0.394)	13.3 (0.524)	3240
012	12	11.0 (0.433)	14.3 (0.563)	3000
013	13	12.0 (0.472)	15.3 (0.602)	2760
014	14	13.0 (0.512)	16.3 (0.642)	2640
015	15	14.0 (0.551)	17.3 (0.681)	2400
016	16	15.0 (0.591)	18.3 (0.720)	2280
017	17	16.0 (0.630)	19.3 (0.760)	2000
018	18	17.0 (0.669)	20.3 (0.799)	2040
019	19	18.0 (0.709)	21.3 (0.839)	1920
00 6226 020 001 800	20	19.0 (0.748)	22.3 (0.878)	1920

HOW TO ORDER

00	6226	0XX	001	800
		Number of Contacts		

See page 66 for ordering in Tape and Reel.

1.00mm Pitch

Series 6226 - Tape and Reel Package

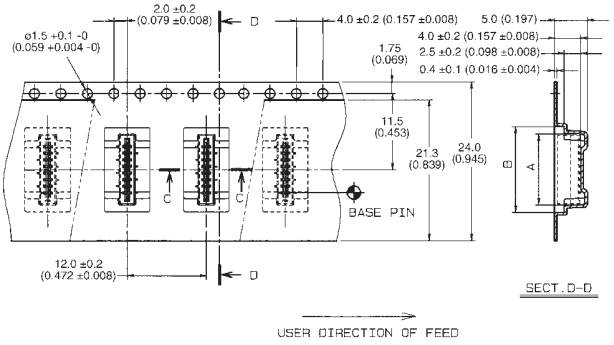

Assembly Number	No. of Contacts	A	B
04 6226 008 201 800	08	10.7 (0.421)	12.7 (0.500)

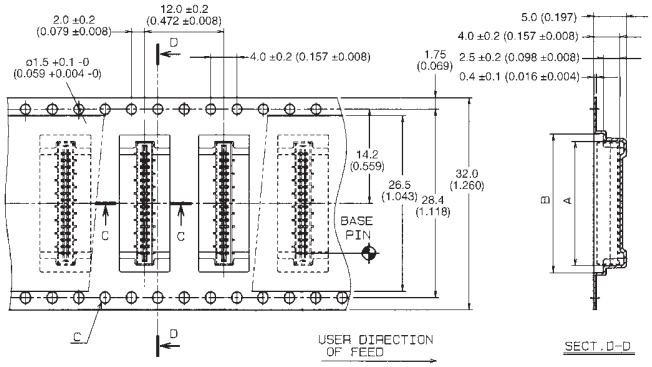

Assembly Number	No. of Contacts	A	B
04 6226 010 301 800	10	12.7 (0.500)	14.7 (0.579)
04 6226 016 301 800	16	18.7 (0.736)	20.7 (0.815)

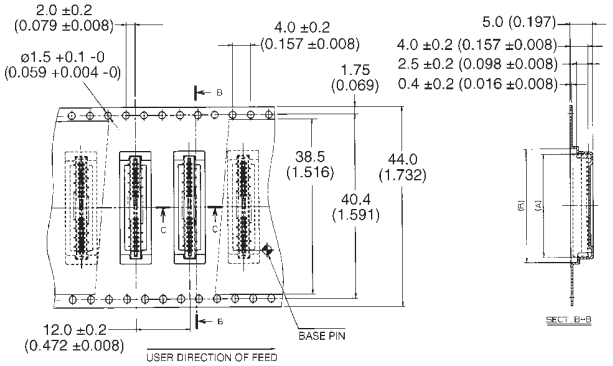

Assembly Number	No. of Contacts	A	B
04 6226 020 401 800	20	22.7 (0.894)	24.7 (0.972)

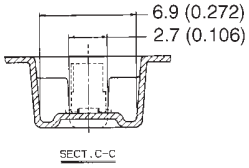

HOW TO ORDER

04	6226	0XX	X01	800
		Number of Contacts	Variation Code	

Variation Code
2 = Emboss 24.0mm
3 = Emboss 32.0mm
4 = Emboss 44.0mm

1000 Connectors per Tape and Reel.

1.00mm Pitch
Series 6227 - LIF Right Angle SMT (Dual Sided Contact Type)

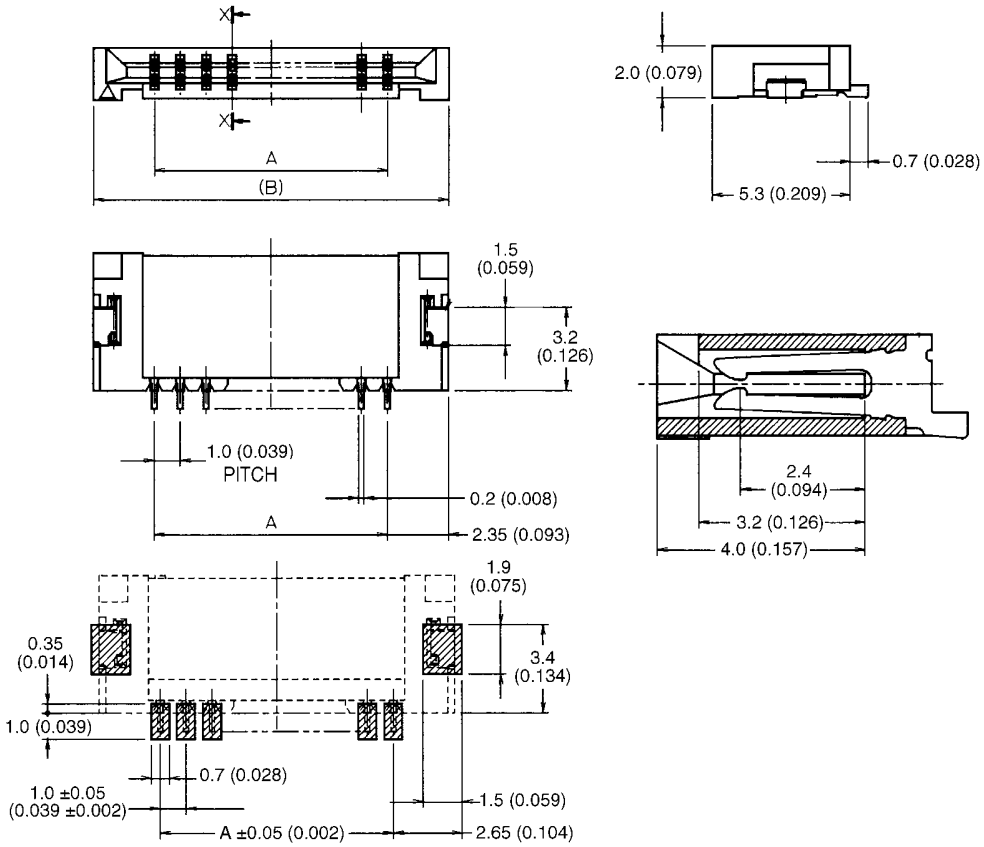

MOUNTING LAYOUT (CONN. MOUNTING SIDE)

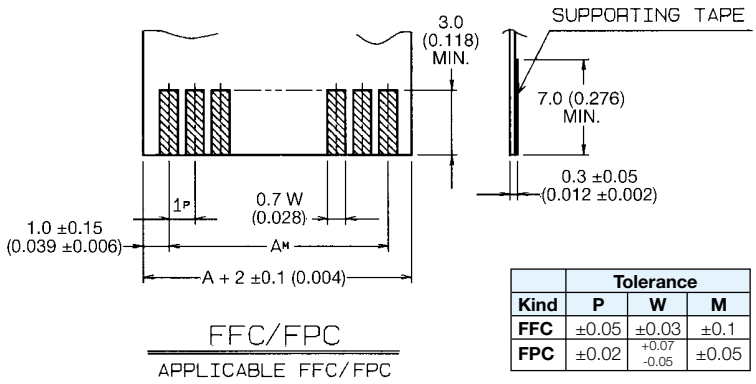

FFC/FPC
APPLICABLE FFC/FPC

	Tolerance		
Kind	P	W	M
FFC	±0.05	±0.03	±0.1
FPC	±0.02	+0.07 -0.05	±0.05

Specifications

- Number of Contacts – 4-20
- 1000 Connectors per Tape & Reel
- Voltage – 50V
- Current Rating – 1.0 amp max.
- Dielectric Withstanding Voltage – 500V RMS min.
- Operating Temperature – (-40°C - +85°C)
- Contact & Metal Tab Material – phosphor bronze (tin-lead plated)
- Insulator Material – nylon 46, natural color (UL 94 V-O)
- FFC/FPC Thickness – 0.3 ±0.05mm (0.012 ±0.002")
- Profile Height – 2.00mm (0.079")

No. of Contacts	Dimension	
	A	B
04	3.0 (0.118)	7.7 (0.303)
05	4.0 (0.157)	8.7 (0.343)
06	5.0 (0.197)	9.7 (0.382)
07	6.0 (0.236)	10.7 (0.421)
08	7.0 (0.276)	11.7 (0.461)
09	8.0 (0.315)	12.7 (0.500)
10	9.0 (0.354)	13.7 (0.539)
11	10.0 (0.394)	14.7 (0.579)
12	11.0 (0.433)	15.7 (0.618)
13	12.0 (0.472)	16.7 (0.658)
14	13.0 (0.512)	17.7 (0.697)
15	14.0 (0.551)	18.7 (0.736)
16	15.0 (0.591)	19.7 (0.776)
17	16.0 (0.630)	20.7 (0.815)
18	17.0 (0.669)	21.7 (0.854)
19	18.0 (0.709)	22.7 (0.894)
20	19.0 (0.748)	23.7 (0.933)

HOW TO ORDER

04	6227	0XX	100	800

Number of Contacts

1000 Connectors per Tape and Reel.

1.00mm Pitch

Series 6227 - Tape and Reel Package

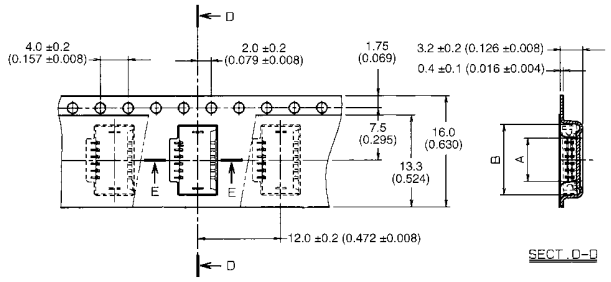

Assembly Number	No. of Contacts	A	B
04 6227 004 100 800	04	4.2 (0.165)	8.1 (0.319)
04 6227 005 100 800	05	5.2 (0.205)	9.1 (0.358)
04 6227 006 100 000	06	6.2 (0.244)	10.1 (0.398)

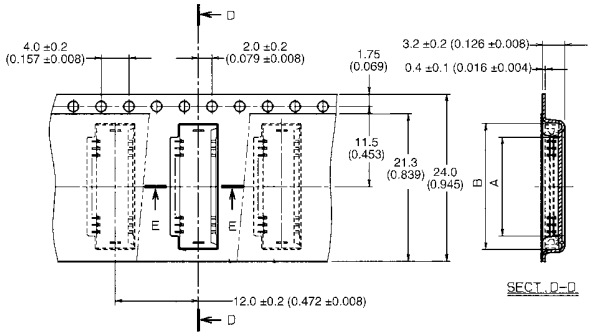

Assembly Number	No. of Contacts	A	B
04 6227 007 100 800	07	7.2 (0.283)	11.1 (0.437)
008	08	8.2 (0.323)	12.1 (0.476)
009	09	9.2 (0.362)	13.1 (0.516)
010	10	10.2 (0.402)	14.1 (0.555)
011	11	11.2 (0.441)	15.1 (0.594)
012	12	12.2 (0.480)	16.1 (0.634)
013	13	13.2 (0.520)	17.1 (0.673)
04 6227 014 100 800	14	14.2 (0.559)	18.1 (0.713)

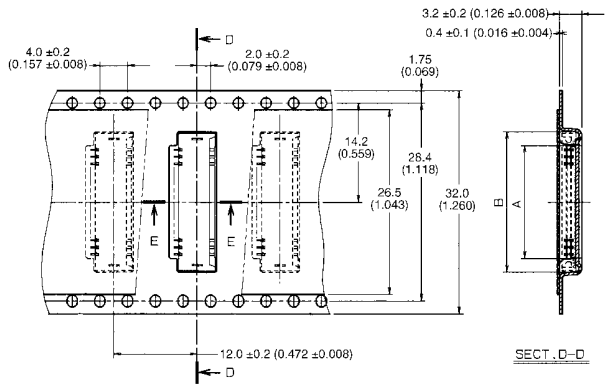

Assembly Number	No. of Contacts	A	B
15 15.2 (0.598)	015	19.1 (0.752)	04 6227 015 100 800
16 16.2 (0.638)	016	20.1 (0.791)	

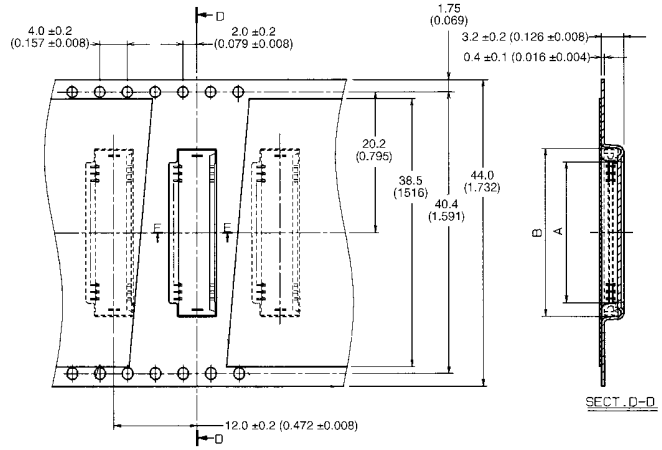

Assembly Number	No. of Contacts	A	B
19 19.2 (0.756)	019	23.1 (0.909)	04 6227 019 100 800

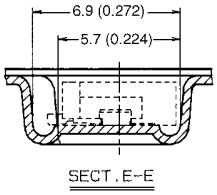

HOW TO ORDER

04	6227	0XX	100	800

Number of Contacts

1000 Connectors per Tape and Reel.

1.00mm Pitch

Series 6228 - LIF Right Angle Through Hole (Top Contact Type)

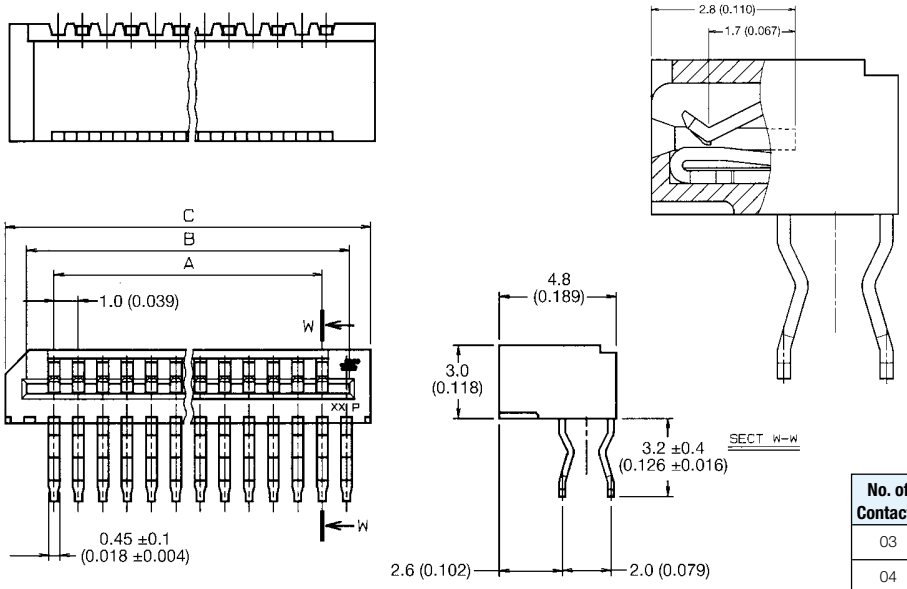

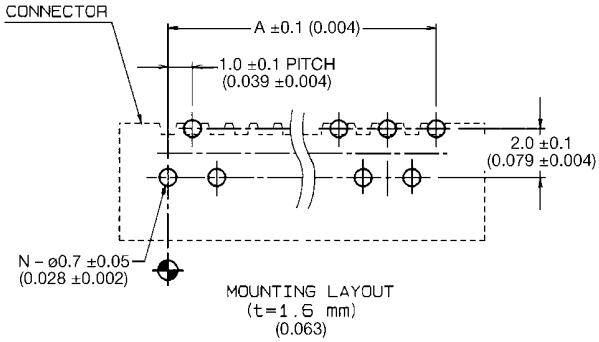

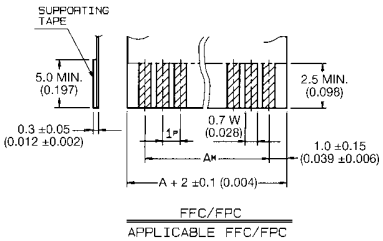

	Tolerance		
Kind	P	W	M
FFC	±0.05	±0.03	±0.1
FPC	±0.02	+0.1 -0.05	±0.05

Specifications

- Number of Contacts – 3-30
- Tray Packaged
- Voltage – 50V
- Current Rating – 0.5 amp max.
- Dielectric Withstanding Voltage – 500V RMS min.
- Operating Temperature – (-20°C - +85°C)
- Contact Material – phosphor bronze (tin-lead plated)
- Insulator Material – 66 nylon, natural color (UL 94 V-O)
- FFC/FPC Thickness – 0.3 ±0.05 mm (0.012 ±0.002")
- PCB Thickness – 1.60mm (0.063")
- Profile Height – 3.0mm (0.118") right angle, 4.8mm (0.189") straight

No. of Contacts	Assembly Number	A	B	C	Qty. Per Box
03	00 6228 003 201 800	2.0 (0.079)	4.1 (0.161)	6.0 (0.236)	6960
04	004	3.0 (0.118)	5.1 (0.201)	7.0 (0.276)	6000
05	005	4.0 (0.157)	6.1 (0.240)	8.0 (0.315)	5280
06	006	5.0 (0.197)	7.1 (0.280)	9.0 (0.354)	4680
07	007	6.0 (0.236)	8.1 (0.319)	10.0 (0.394)	4200
08	008	7.0 (0.276)	9.1 (0.358)	11.0 (0.433)	3840
09	009	8.0 (0.315)	10.1 (0.398)	12.0 (0.472)	3600
10	010	9.0 (0.354)	11.1 (0.437)	13.0 (0.512)	3240
11	011	10.0 (0.394)	12.1 (0.476)	14.0 (0.551)	3000
12	012	11.0 (0.433)	13.1 (0.516)	15.0 (0591)	2880
13	013	12.0 (0.472)	14.1 (0.555)	16.0 (0.630)	2640
14	014	13.0 (0.512)	15.1 (0.594)	17.0 (0.669)	2520
15	015	14.0 (0.551)	16.1 (0.634)	18.0 (0.709)	2400
16	016	15.0 (0.591)	17.1 (0.673)	19.0 (0.748)	2280
17	017	16.0 (0.630)	18.1 (0.713)	20.0 (0.787)	2040
18	018	17.0 (0.669)	19.1 (0.752)	21.0 (0.827)	2040
19	019	18.0 (0.709)	20.1 (0.791)	22.0 (0.866)	1920
20	020	19.0 (0.748)	21.1 (0.831)	23.0 (0.906)	1800
21	021	20.0 (0.787)	22.1 (0.870)	24.0 (0.945)	1800
22	022	21.0 (0.827)	23.1 (0.909)	25.0 (0.984)	1680
23	023	22.0 (0.866)	24.1 (0.949)	26.0 (1.024)	1560
24	024	23.0 (0.906)	25.1 (0.988)	27.0 (1.063)	1560
25	025	24.0 (0.945)	26.1 (1.028)	28.0 (1.102)	1440
26	026	25.0 (0.984)	27.1 (1.067)	29.0 (1.142)	1440
27	027	26.0 (1.024)	28.1 (1.106)	30.0 (1.181)	1440
28	028	27.0 (1.063)	29.1 (1.146)	31.0 (1.220)	1320
29	029	28.0 (1.102)	30.1 (1.185)	32.0 (1.260)	1320
30	00 6228 030 201 800	29.0 (1.142)	31.1 (1.224)	33.0 (1.299)	1200

HOW TO ORDER

00	6228	0XX	201	800
		Number of Contacts		

1.25mm Pitch

Product Selector Guide

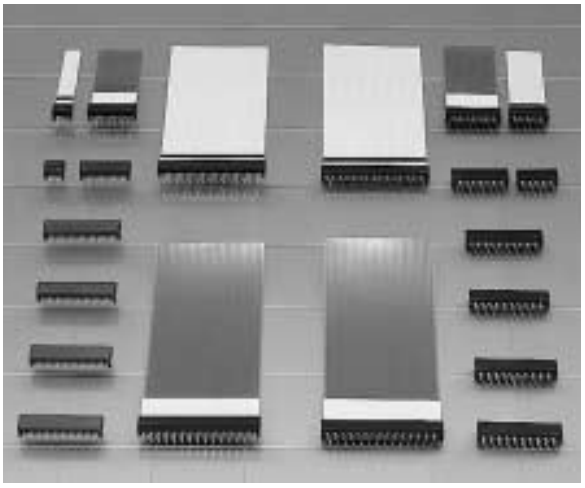

We also can supply C/Carbon Silver-type connectors.

SMT	ST (Vertical)	ZIF	
		NON-ZIF (LIF)	6207
	RA (Right Angle)	ZIF	
		NON-ZIF (LIF)	6207
DIP (Through Hole)	ST (Vertical)	ZIF	6205
		NON-ZIF (LIF)	8370 6216
	RA (Right Angle)	ZIF	
		NON-ZIF (LIF)	8370 6216
	Bottom Entry	NON-ZIF (LIF)	6203
	Direct	–	5062

millimeters (inches)

Series	8370		6216			6205	6207		6203	5062
Type	NON-ZIF (LIF) RA DIP	NON-ZIF (LIF) ST DIP	NON-ZIF (LIF) RA DIP	NON-ZIF (LIF) RA DIP	NON-ZIF (LIF) ST DIP	ZIF ST DIP	NON-ZIF (LIF) RA SMT	NON-ZIF (LIF) ST SMT	NON-ZIF (LIF) RA DIP Bottom Entry	NON-ZIF (LIF) RA ST Direct
Contact	Dual	Dual	Top	Bottom	Single	Single	Dual	Dual	Single	
Profile Height in mm	4.20 (0.165)	7.20 (0.283)	4.20 (0.165)	4.20 (0.165)	7.00 (0.276)	8.80 (0.346)	3.50 (0.138)	7.00 (0.276)	5.50 (0.217)	5.00 (0.197)
Number of Contacts	4-30	4-30	4-40	4-30	4-40	8-40	5-20	5-20	5-15	5-30
Current Rating	1.0A Max.	1.0A Max.	1.0A Max.	1.0A Max.	1.0A Max.	1.0A Max.	1.0A Max.	1.0A Max.	1.0A Max.	1.0A Max.
Voltage Rating	125V Max.	125V Max.	125V Max.	125V Max.	125V Max.	125V Max.	125V Max.	125V Max.	125V Max.	125V Max.
Dielectric Withstanding Voltage	500Vrms	500Vrms	500Vrms	500Vrms	500Vrms	500Vrms	500Vrms	500Vrms	500Vrms	500Vrms
Contact Material	Phosphor bronze Tin-Plated	Phosphor bronze Tin-Plated	Phosphor bronze Tin-Plated	Phosphor bronze Tin-Plated	Phosphor bronze Tin-Plated	Phosphor bronze Tin-Plated	Phosphor bronze Tin-Plated	Phosphor bronze Tin-Plated	Phosphor bronze Tin-Plated	
Insulator Material	Glass-filled PBT	Glass-filled PBT	Glass-filled PBT	Glass-filled PBT	Glass-filled PBT	Glass-filled PBT	Glass-filled PPS	Glass-filled PPS	Glass-filled Nylon	Glass-filled PBT
Operating Temperature	-40ºC~+85ºC		-40ºC~+85ºC			-40ºC~+85ºC	-40ºC~+85ºC		-40ºC~+85	-40ºC~+85ºC
FFC/FPC Thickness	0.3±0.05 (0.012±0.002)	0.3±0.05 (0.012±0.002)	0.3±0.05 (0.012±0.002)	0.3±0.05 (0.012±0.002)	0.3±0.05 (0.012±0.002)	0.3±0.05 (0.012±0.002)	0.3±0.05 (0.012±0.002)	0.3±0.05 (0.012±0.002)	0.3±0.05 (0.012±0.002)	
Page	71-72		73-77			78	79-80		81	82

RA = Right Angle ST = Straight DIP = Through Hole

1.25mm Pitch
Series 8370
LIF Right Angle Through Hole (Dual Sided Contact Type)

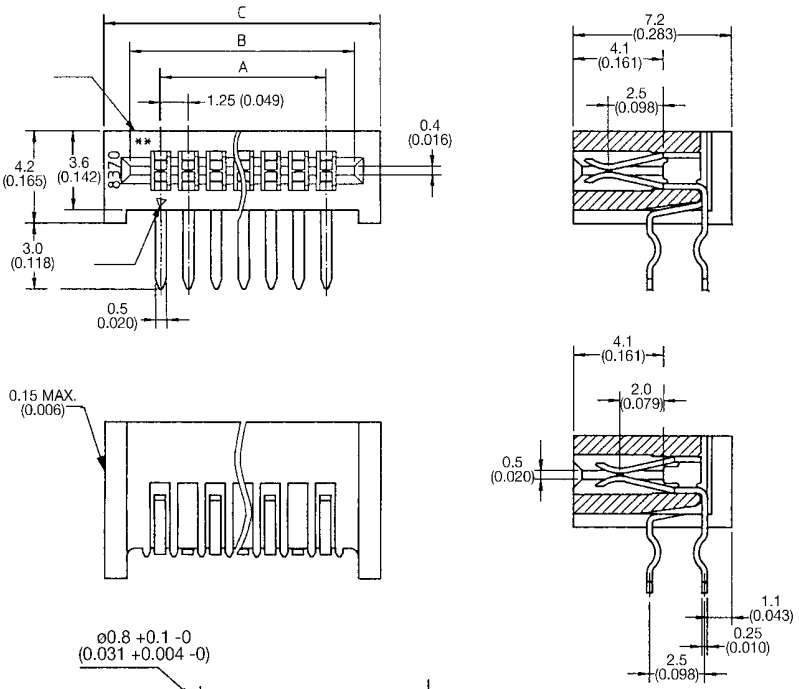

MOUNTING LAYOUT
t =1.0 - 1.6
(0.039 - 0.063)

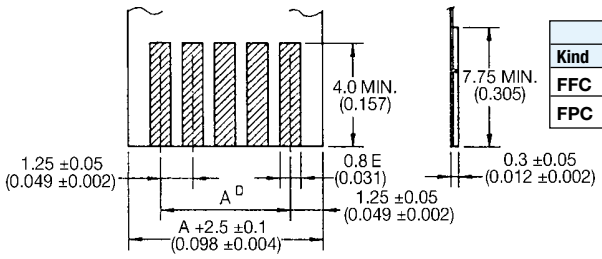

Kind	Tolerance D	Tolerance E
FFC	±0.1	±0.03
FPC	±0.05	±0.1

FFC/FPC

Specifications

- Number of Contacts – 4-30
- Tray Packaged/Box
- Voltage – 125V
- Current Rating – 1.0 amp max.
- Dielectric Withstanding Voltage – 500V RMS min.
- Operating Temperature – (-40°C - +85°C)
- Contact Material – phosphor bronze (tin-lead plated)
- Insulator Material – glass-filled PBT, (UL 94 V-O) black color
- FFC/FPC Thickness –0.3 ±0.05mm (0.012 ±0.002")
- PCB Thickness – 1.0-1.6mm (0.039-0.063")
- Profile Height – Straight - 7.2mm (0.283")
  Right Angle - 4.2mm (0.165")

No. of Contacts	Dimension A	Dimension B	Dimension C	Qty. per Box
04	3.75 (0.148)	6.41 (0.252)	8.75 (0.344)	4100
05	5.0 (0.197)	7.66 (0.302)	10.0 (0.394)	3500
06	6.25 (0.246)	8.91 (0.351)	11.25 (0.443)	3200
07	7.5 (0.295)	10.16 (0.400)	12.5 (0.492)	2800
08	8.75 (0.344)	11.41 (0.449)	13.75 (0.541)	2600
09	10.0 (0.394)	12.66 (0.498)	15.0 (0.591)	2400
10	11.25 (0.443)	13.91 (0.548)	16.25 (0.640)	2200
11	12.5 (0.492)	15.16 (0.597)	17.5 (0.689)	2000
12	13.75 (0.541)	16.41 (0.646)	18.75 (0.738)	1900
13	15.0 (0.591)	17.66 (0.695)	20.0 (0.787)	1800
14	16.25 (0.640)	18.91 (0.744)	21.25 (0.837)	1700
15	17.5 (0.689)	20.16 (0.794)	22.5 (0.886)	1600
16	18.75 (0.738)	21.41 (0.843)	23.75 (0.935)	1500
17	20.0 (0.787)	22.66 (0.892)	25.0 (0.984)	1400
18	21.25 (0.837)	23.91 (0.941)	26.25 (1.033)	1300
19	22.5 (0.886)	25.16 (0.991)	27.5 (1.083)	1200
20	23.75 (0.935)	26.41 (1.040)	28.75 (1.132)	1200
21	25.0 (0.984)	27.66 (1.089)	30.0 (1.181)	1100
22	26.25 (1.033)	28.91 (1.138)	31.25 (1.230)	1100
23	27.5 (1.083)	30.16 (1.187)	32.5 (1.280)	1000
24	28.75 (1.132)	31.41 (1.237)	33.75 (1.329)	1000
25	30.0 (1.181)	32.66 (1.286)	35.0 (1.378)	1000
26	31.25 (1.230)	33.91 (1.335)	36.25 (1.427)	900
27	32.5 (1.280)	35.16 (1.384)	37.5 (1.476)	900
28	33.75 (1.329)	36.41 (1.433)	38.75 (1.526)	900
29	35.0 (1.378)	37.66 (1.483)	40.0 (1.575)	800
30	36.25 (1.427)	38.91 (1.532)	41.25 (1.624)	800

HOW TO ORDER

00	8370	XX7	000	800
		Number of Contacts		

1.25mm Pitch
Series 8370
LIF Vertical Through Hole (Dual Sided Contact Type)

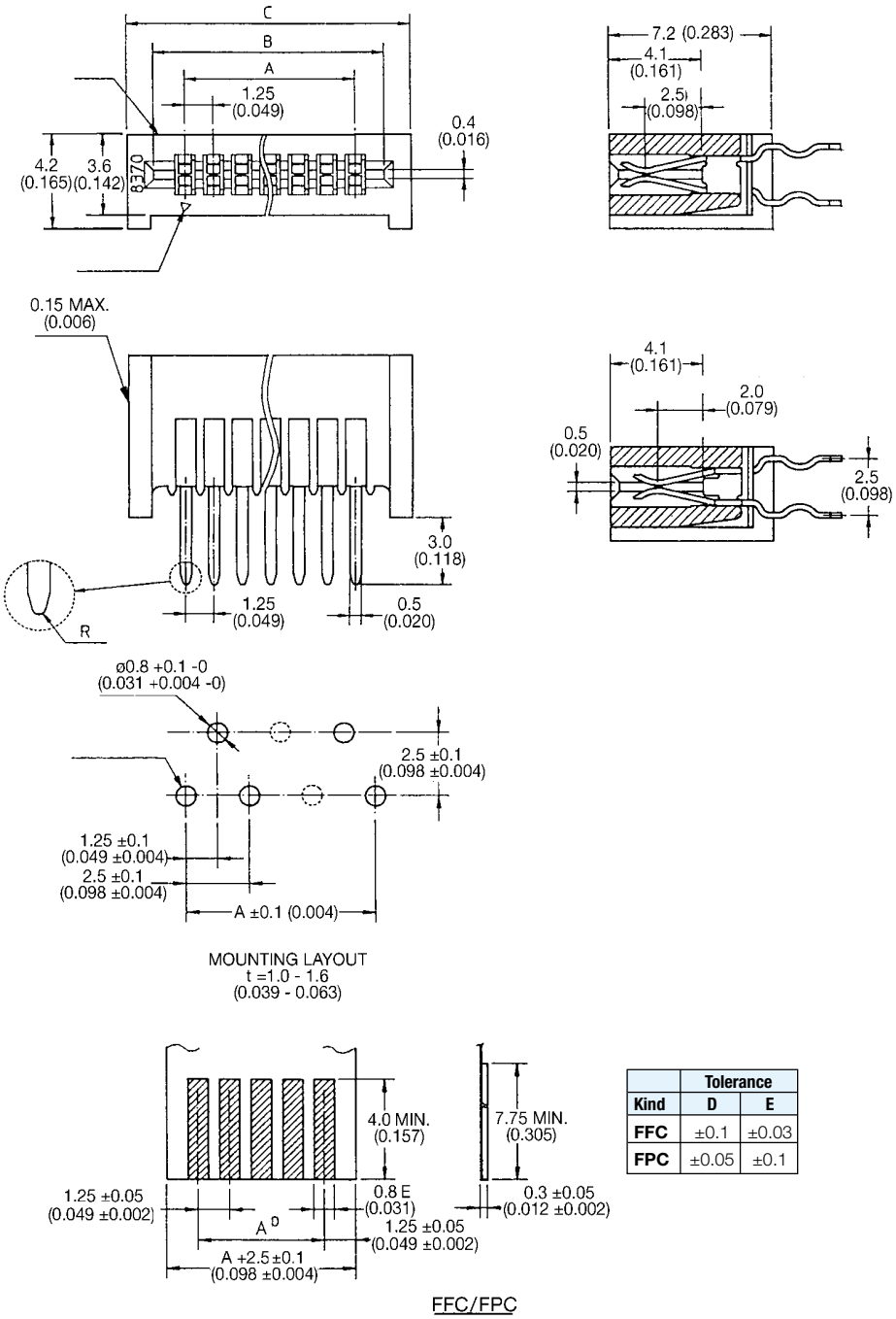

Kind	Tolerance D	Tolerance E
FFC	±0.1	±0.03
FPC	±0.05	±0.1

No. of Contacts	Dimension A	Dimension B	Dimension C	Qty. per Box
04	3.75 (0.148)	6.41 (0.252)	8.75 (0.344)	4100
05	5.0 (0.197)	7.66 (0.302)	10.0 (0.394)	3500
06	6.25 (0.246)	8.91 (0.351)	11.25 (0.443)	3200
07	7.5 (0.295)	10.16 (0.400)	12.5 (0.492)	2800
08	8.75 (0.344)	11.41 (0.449)	13.75 (0.541)	2600
09	10.0 (0.394)	12.66 (0.498)	15.0 (0.591)	2400
10	11.25 (0.443)	13.91 (0.548)	16.25 (0.640)	2200
11	12.5 (0.492)	15.16 (0.597)	17.5 (0.689)	2000
12	13.75 (0.541)	16.41 (0.646)	18.75 (0.738)	1900
13	15.0 (0.591)	17.66 (0.695)	20.0 (0.787)	1800
14	16.25 (0.640)	18.91 (0.744)	21.25 (0.837)	1700
15	17.5 (0.689)	20.16 (0.794)	22.5 (0.886)	1600
16	18.75 (0.738)	21.41 (0.843)	23.75 (0.935)	1500
17	20.0 (0.787)	22.66 (0.892)	25.0 (0.984)	1400
18	21.25 (0.837)	23.91 (0.941)	26.25 (1.033)	1300
19	22.5 (0.886)	25.16 (0.991)	27.5 (1.083)	1200
20	23.75 (0.935)	26.41 (1.040)	28.75 (1.132)	1200
21	25.0 (0.984)	27.66 (1.089)	30.0 (1.181)	1100
22	26.25 (1.033)	28.91 (1.138)	31.25 (1.230)	1100
23	27.5 (1.083)	30.16 (1.187)	32.5 (1.280)	1000
24	28.75 (1.132)	31.41 (1.237)	33.75 (1.329)	1000
25	30.0 (1.181)	32.66 (1.286)	35.0 (1.378)	1000
26	31.25 (1.230)	33.91 (1.335)	36.25 (1.427)	900
27	32.5 (1.280)	35.16 (1.384)	37.5 (1.476)	900
28	33.75 (1.329)	36.41 (1.433)	38.75 (1.526)	900
29	35.0 (1.378)	37.66 (1.483)	40.0 (1.575)	800
30	36.25 (1.427)	38.91 (1.532)	41.25 (1.624)	800

HOW TO ORDER

00	8370	XX1	000	800

Number of Contacts

1.25mm Pitch
Series 6216
LIF Right Angle Through Hole (Top Contact Type)

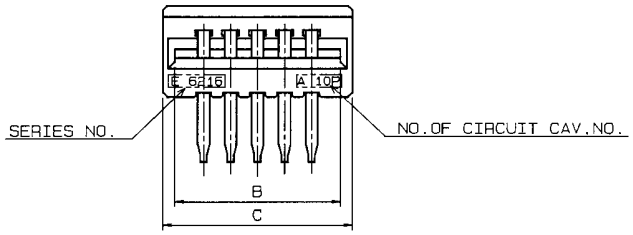

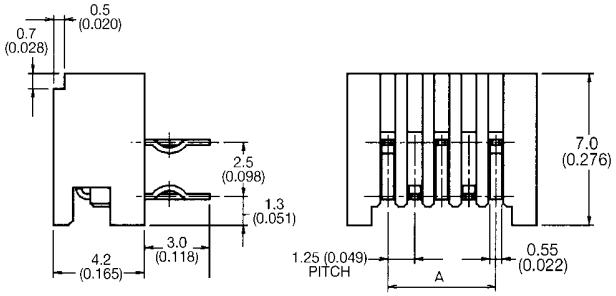

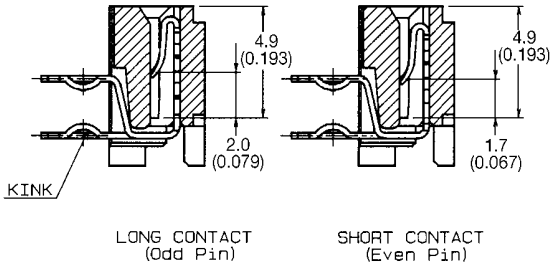

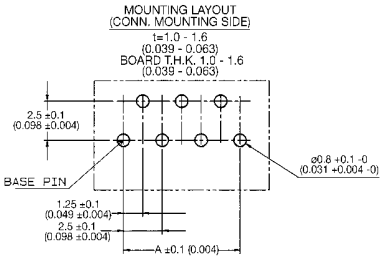

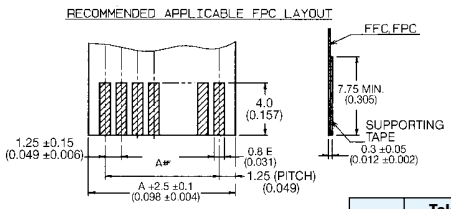

	Tolerance	
Kind	D	E
FFC	±0.1	±0.03
FPC	±0.05	±0.1

Specifications

- Number of Contacts – 4-40
- Tray Packaged/Box
- Voltage – 200V
- Current Rating – 1.0 amp max.
- Dielectric Withstanding Voltage – 500V RMS min.
- Operating Temperature – (-20°C - +85°C)
- Contact Material – phosphor bronze (tin-lead plated)
- Insulator Material – glass-filled PBT, (UL 94 V-O) black color
- FFC/FPC Thickness – 0.3 ±0.05mm (0.012 ±0.002")
- PCB Thickness – 1.0-1.6mm (0.039-0.063")
- Profile Height – Straight - 7.0mm (0.276")
  Right Angle - 4.2mm (0.165")
- Reverse footprint for straight type also available – contact sales office for details

No. of Contacts	Dimension A	Dimension B	Dimension C	Qty. Per Box
04	3.75 (0.148)	6.41 (0.252)	7.5 (0.295)	4800
05	5.0 (0.197)	7.66 (0.302)	8.75 (0.344)	4100
06	6.25 (0.246)	8.91 (0.351)	10.0 (0.394)	3600
07	7.5 (0.295)	10.16 (0.400)	11.25 (0.443)	3200
08	8.75 (0.344)	11.41 (0.449)	12.5 (0.492)	2800
09	10.0 (0.394)	12.66 (0.498)	13.75 (0.541)	2600
10	11.25 (0.443)	13.91 (0.548)	15.0 (0.591)	2400
11	12.5 (0.492)	15.16 (0.597)	16.25 (0.640)	2200
12	13.75 (0.541)	16.41 (0.646)	17.5 (0.689)	2000
13	15.0 (0.591)	17.66 (0.695)	18.75 (0.738)	1900
14	16.25 (0.640)	18.91 (0.744)	20.0 (0.787)	1800
15	17.5 (0.689)	20.16 (0.794)	21.25 (0.837)	1600
16	18.75 (0.738)	21.41 (0.843)	22.5 (0.886)	1600
17	20.0 (0.787)	22.66 (0.892)	23.75 (0.935)	1500
18	21.25 (0.837)	23.91 (0.941)	25.0 (0.984)	1400
19	22.5 (0.886)	25.16 (0.991)	26.25 (1.033)	1300
20	23.75 (0.935)	26.41 (1.040)	27.5 (1.083)	1300
21	25.0 (0.984)	27.66 (1.089)	28.75 (1.132)	1200
22	26.25 (1.033)	28.91 (1.138)	30.0 (1.181)	1200
23	27.5 (1.083)	30.16 (1.187)	31.25 (1.230)	1100
24	28.75 (1.132)	31.41 (1.237)	32.5 (1.280)	1100
25	30.0 (1.181)	32.66 (1.286)	33.75 (1.329)	1000
26	31.25 (1.230)	33.91 (1.335)	35.0 (1.378)	1000
27	32.5 (1.280)	35.16 (1.384)	36.25 (1.427)	900
28	33.75 (1.329)	36.41 (1.433)	37.5 (1.476)	900
29	35.0 (1.378)	37.66 (1.483)	38.75 (1.526)	900
30	36.25 (1.427)	38.91 (1.532)	40.0 (1.575)	900

HOW TO ORDER

00	6216	0XX	11X	808

Number of Contacts

Variation Code
0 = With Kinked Legs
(Each Two Pins at Both Ends)
1 = Without Kinked Legs

1.25mm Pitch
Series 6216
LIF Right Angle Through Hole High Pin Count

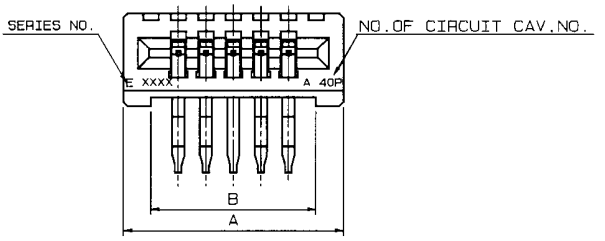

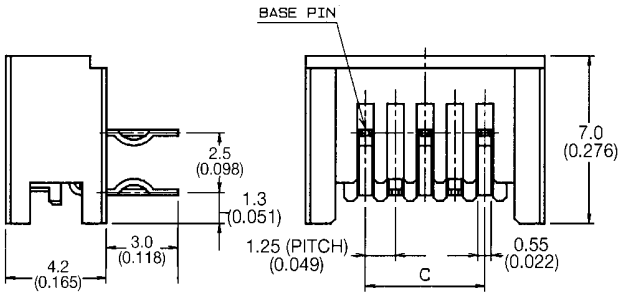

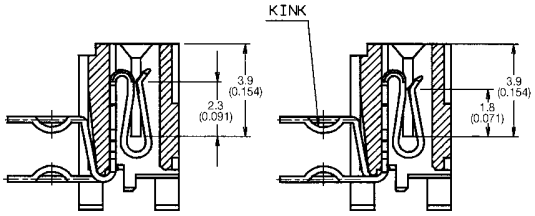

LONG CONTACT (ODD PIN) SHORT CONTACT (EVEN PIN)

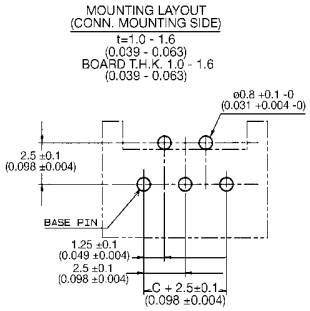

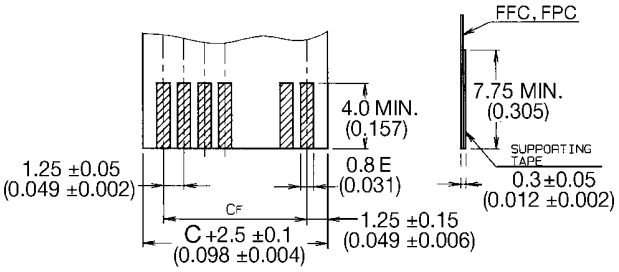

APPLICABLE FFC/FPC

	Tolerance	
Kind	E	F
FFC	±0.03	±0.1
FPC	±0.1	±0.05

No. of Contacts	Dimension			Qty. Per Box
	A	B	C	
31	42.5 (1.673)	40.16 (1.581)	37.5 (1.476)	800
32	43.75 (1.722)	41.41 (1.630)	38.75 (1.526)	800
33	45.0 (1.772)	42.66 (1.680)	40.0 (1.575)	800
34	46.25 (1.821)	43.91 (1.729)	41.25 (1.624)	700
35	47.5 (1.870)	45.16 (1.778)	42.5 (1.673)	700
36	48.75 (1.919)	46.41 (1.827)	43.75 (1.722)	700
37	50.0 (1.968)	47.66 (1.876)	45.0 (1.772)	700
38	51.25 (2.018)	48.91 (1.926)	46.25 (1.821)	700
39	52.5 (2.067)	50.16 (1.975)	47.5 (1.870)	600
40	53.75 (2.116)	51.41 (2.024)	48.75 (1.919)	600

HOW TO ORDER

00	6216	0XX	12X	808

Number of Contacts

Variation Code
0 = With Kinked Legs
(Each Two Pins at Both Ends)
1 = Without Kinked Legs

1.25mm Pitch
Series 6216
LIF Right Angle Through Hole (Bottom Contact Type)

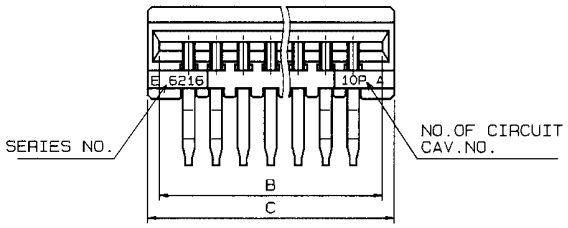

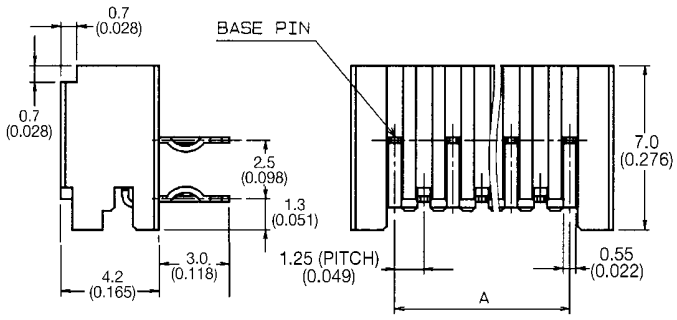

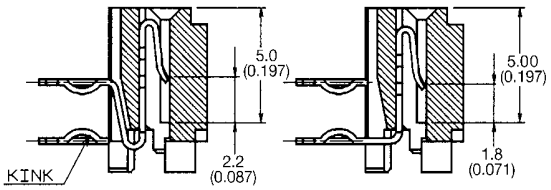

LONG CONTACT (Odd Pin) SHORT CONTACT (Even Pin)

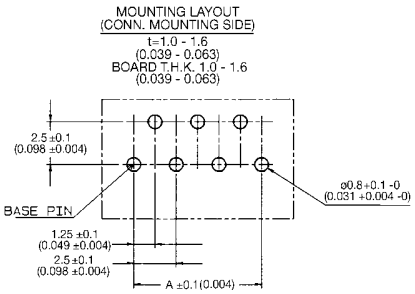

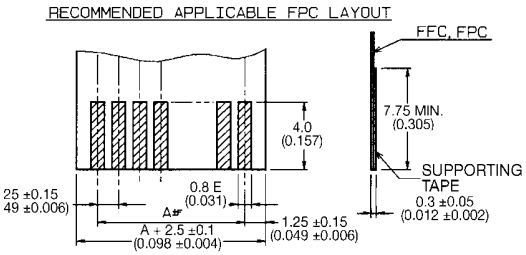

	Tolerance	
Kind	D	E
FFC	±0.03	±0.1
FPC	±0.1	±0.05

No. of Contacts	Dimension A	Dimension B	Dimension C	Qty. Per Box
04	3.75 (0.148)	6.41 (0.252)	7.5 (0.295)	4800
05	5.0 (0.197)	7.66 (0.302)	8.75 (0.344)	4100
06	6.25 (0.246)	8.91 (0.351)	10.0 (0.394)	3600
07	7.5 (0.295)	10.16 (0.400)	11.25 (0.443)	3200
08	8.75 (0.344)	11.41 (0.449)	12.5 (0.492)	2800
09	10.0 (0.394)	12.66 (0.498)	13.75 (0.541)	2600
10	11.25 (0.443)	13.91 (0.548)	15.0 (0.591)	2400
11	12.5 (0.492)	15.16 (0.597)	16.25 (0.640)	2200
12	13.75 (0.541)	16.41 (0.646)	17.5 (0.689)	2000
13	15.0 (0.591)	17.66 (0.695)	18.75 (0.738)	1900
14	16.25 (0.640)	18.91 (0.744)	20.0 (0.787)	1800
15	17.5 (0.689)	20.16 (0.794)	21.25 (0.837)	1600
16	18.75 (0.738)	21.41 (0.843)	22.5 (0.886)	1600
17	20.0 (0.787)	22.66 (0.892)	23.75 (0.935)	1500
18	21.25 (0.837)	23.91 (0.941)	25.0 (0.984)	1400
19	22.5 (0.886)	25.16 (0.991)	26.25 (1.033)	1300
20	23.75 (0.935)	26.41 (1.040)	27.5 (1.083)	1300
21	25.0 (0.984)	27.66 (1.089)	28.75 (1.132)	1200
22	26.25 (1.033)	28.91 (1.138)	30.0 (1.181)	1200
23	27.5 (1.083)	30.16 (1.187)	31.25 (1.230)	1100
24	28.75 (1.132)	31.41 (1.237)	32.5 (1.280)	1100
25	30.0 (1.181)	32.66 (1.286)	33.75 (1.329)	1000
26	31.25 (1.230)	33.91 (1.335)	35.0 (1.378)	1000
27	32.5 (1.280)	35.16 (1.384)	36.25 (1.427)	900
28	33.75 (1.329)	36.41 (1.433)	37.5 (1.476)	900
29	35.0 (1.378)	37.66 (1.483)	38.75 (1.526)	900
30	36.25 (1.427)	38.91 (1.532)	40.0 (1.575)	900

HOW TO ORDER

00	6216	0XX	10X	808

Number of Contacts

Variation Code
0 = With Kinked Legs
(Each Two Pins at Both Ends)
1 = Without Kinked Legs

1.25mm Pitch
Series 6216 – LIF Vertical Through Hole

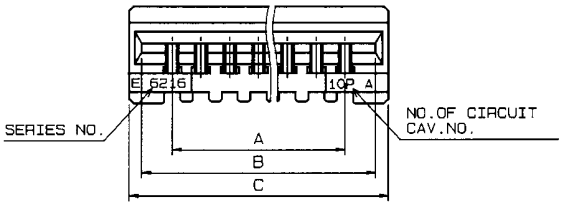

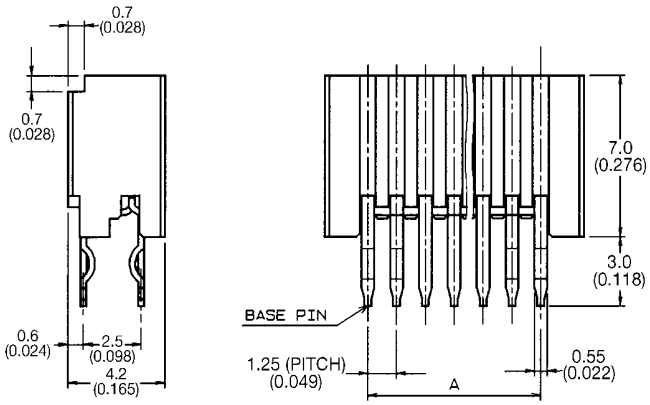

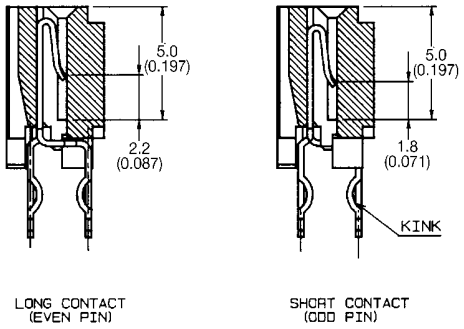

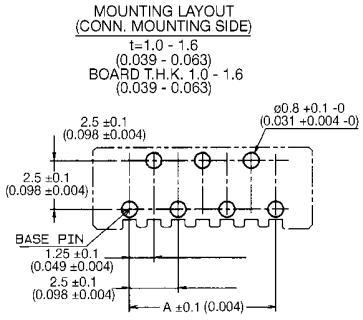

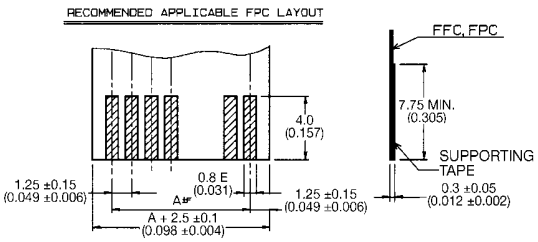

Kind	Tolerance D	Tolerance E
FFC	±0.03	±0.1
FPC	±0.1	±0.05

No. of Contacts	Dimension A	Dimension B	Dimension C	Qty. Per Box
04	3.75 (0.148)	6.41 (0.252)	7.5 (0.295)	4800
05	5.0 (0.197)	7.66 (0.302)	8.75 (0.344)	4100
06	6.25 (0.246)	8.91 (0.351)	10.0 (0.394)	3600
07	7.5 (0.295)	10.16 (0.400)	11.25 (0.443)	3200
08	8.75 (0.344)	11.41 (0.449)	12.5 (0.492)	2800
09	10.0 (0.394)	12.66 (0.498)	13.75 (0.541)	2600
10	11.25 (0.443)	13.91 (0.548)	15.0 (0.591)	2200
11	12.5 (0.492)	15.16 (0.597)	16.25 (0.640)	2200
12	13.75 (0.541)	16.41 (0.646)	17.5 (0.689)	2000
13	15.0 (0.591)	17.66 (0.695)	18.75 (0.738)	1900
14	16.25 (0.640)	18.91 (0.744)	20.0 (0.787)	1800
15	17.5 (0.689)	20.16 (0.794)	21.25 (0.837)	1600
16	18.75 (0.738)	21.41 (0.843)	22.5 (0.886)	1600
17	20.0 (0.787)	22.66 (0.892)	23.75 (0.935)	1500
18	21.25 (0.837)	23.91 (0.941)	25.0 (0.984)	1400
19	22.5 (0.886)	25.16 (0.991)	26.25 (1.033)	1300
20	23.75 (0.935)	26.41 (1.040)	27.5 (1.083)	1300
21	25.0 (0.984)	27.66 (1.089)	28.75 (1.132)	1200
22	26.25 (1.033)	28.91 (1.138)	30.0 (1.181)	1200
23	27.5 (1.083)	30.16 (1.187)	31.25 (1.230)	1100
24	28.75 (1.132)	31.41 (1.237)	32.5 (1.280)	1100
25	30.0 (1.181)	32.66 (1.286)	33.75 (1.329)	1000
26	31.25 (1.230)	33.91 (1.335)	35.0 (1.378)	1000
27	32.5 (1.280)	35.16 (1.384)	36.25 (1.427)	900
28	33.75 (1.329)	36.41 (1.433)	37.5 (1.476)	900
29	35.0 (1.378)	37.66 (1.483)	38.75 (1.526)	900
30	36.25 (1.427)	38.91 (1.532)	40.0 (1.575)	900

HOW TO ORDER

00 **6216** **0XX** **00X** **808**

Number of Contacts

Variation Code
0 = With Kinked Legs
(Each Two Pins at Both Ends)
1 = Without Kinked Legs

1.25mm Pitch
Series 6216
LIF Vertical Through Hole High Pin Count

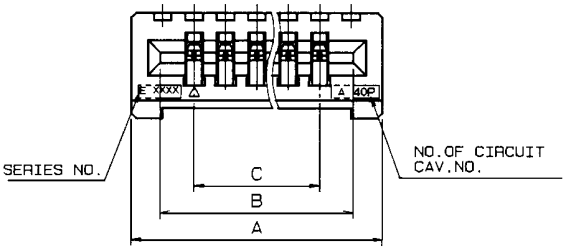

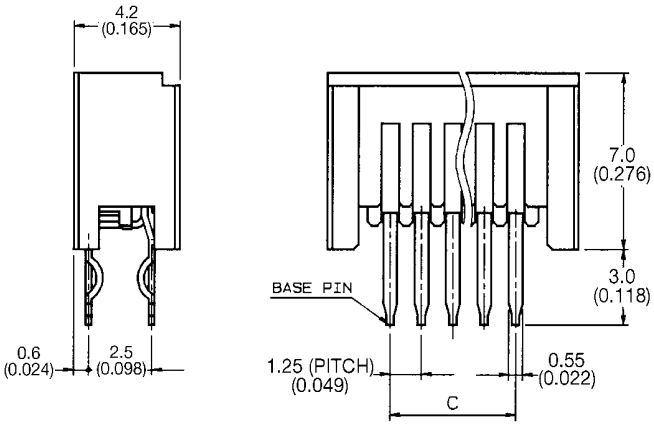

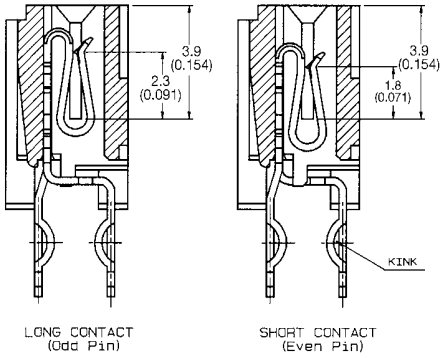

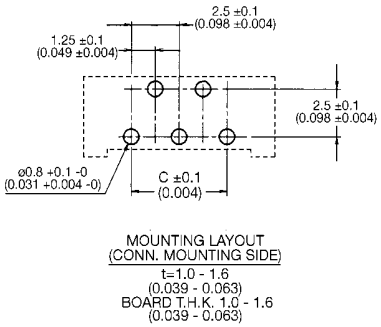

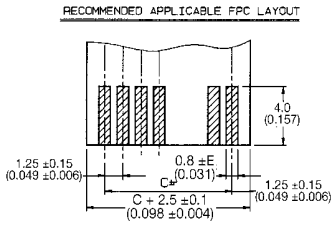

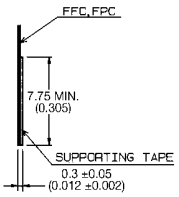

	Tolerance	
Kind	E	F
FFC	±0.03	±0.1
FPC	±0.1	±0.05

No. of Contacts	Dimension			Qty. Per Box
	A	B	C	
31	42.5 (1.673)	40.16 (1.581)	37.5 (1.476)	800
32	43.75 (1.722)	41.41 (1.630)	38.75 (1.526)	800
33	45.0 (1.772)	42.66 (1.680)	40.0 (1.575)	800
34	46.25 (1.821)	43.91 (1.729)	41.25 (1.624)	700
35	47.5 (1.870)	45.16 (1.778)	42.5 (1.673)	700
36	48.75 (1.919)	46.41 (1.827)	43.75 (1.722)	700
37	50.0 (1.968)	47.66 (1.876)	45.0 (1.772)	700
38	51.25 (2.018)	48.91 (1.926)	46.25 (1.821)	700
39	52.5 (2.067)	50.16 (1.975)	47.5 (1.870)	600
40	53.75 (2.116)	51.41 (2.024)	48.75 (1.919)	600

HOW TO ORDER

00 **6216** **1XX** **82X** **808**

Number of Contacts

Variation Code
0 = With Kinked Legs
(Each Two Pins at Both Ends)
1 = Without Kinked Legs

1.25mm Pitch

Series 6205 - ZIF Vertical Through Hole

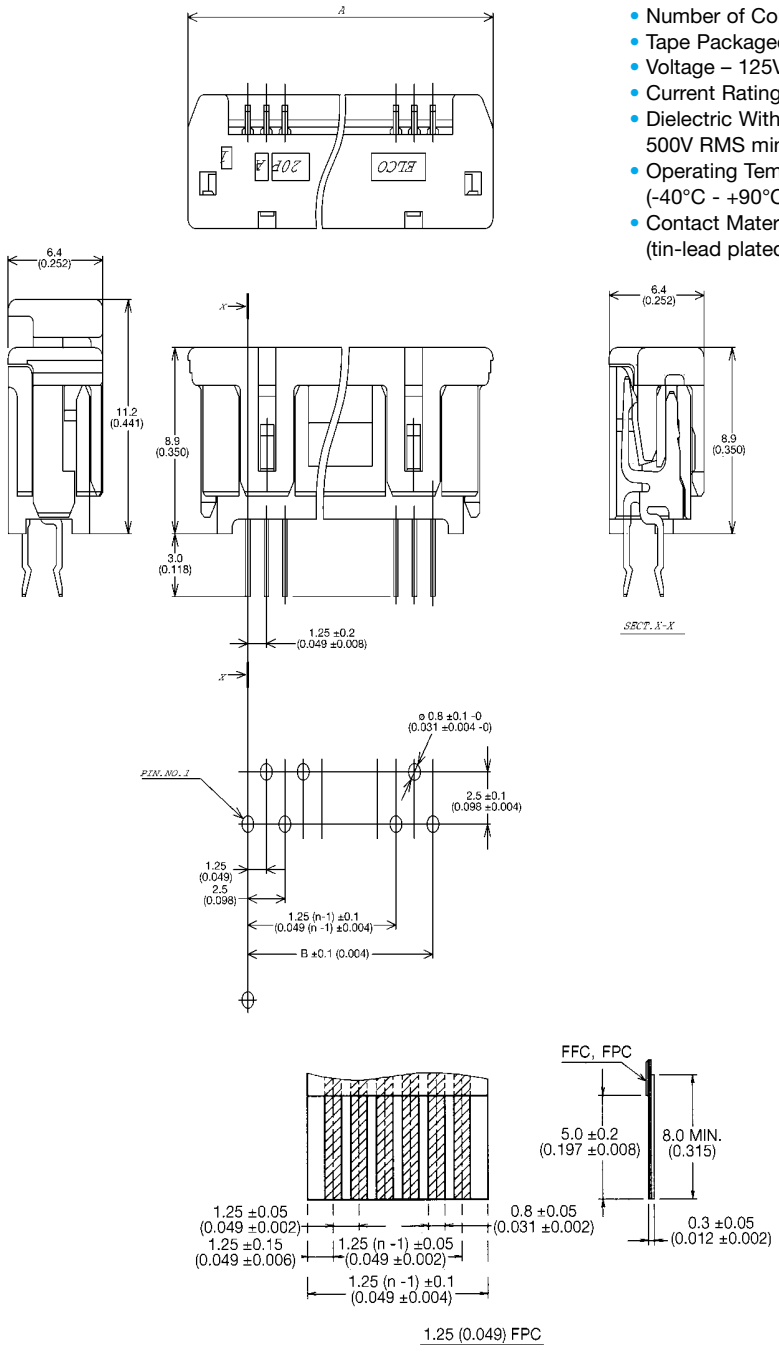

Specifications

- Number of Contacts – 8-40
- Tape Packaged/Box
- Voltage – 125V
- Current Rating – 1.0 amp max.
- Dielectric Withstanding Voltage – 500V RMS min.
- Operating Temperature – (-40°C - +90°C)
- Contact Material – phosphor bronze (tin-lead plated)
- Insulator Material – glass-filled PBT, (UL 94 V-O) black color
- Slider Material – glass-filled PBT, (UL 94 V-O) beige color
- FFC/FPC Thickness – 0.3 ±0.05 mm (0.012 ±0.002")
- PCB Thickness – 1.60mm (0.063")
- Profile Height – 8.90mm (0.350")

No. of Contacts	Assembly Number	A	B	Qty. Per Box
08	00 6205 080 500 825	16.85 (0.663)	8.75 (0.344)	1470
09	090	18.1 (0.713)	10.0 (0.394)	1400
10	100	19.35 (0.762)	11.25 (0.443)	1330
11	110	20.6 (0.811)	12.5 (0.492)	1190
12	120	21.85 (0.860)	13.75 (0.541)	1120
13	130	23.1 (0.909)	15.0 (0.591)	1050
14	140	24.35 (0.959)	16.25 (0.640)	1050
15	150	25.6 (1.008)	17.5 (0.689)	980
16	160	26.85 (1.057)	18.75 (0.738)	910
17	170	28.1 (1.106)	20.0 (0.787)	910
18	180	29.35 (1.156)	21.25 (0.837)	840
19	190	30.6 (1.205)	22.5 (0.886)	840
20	200	31.85 (1.254)	23.75 (0.935)	770
21	210	33.1 (1.303)	25.0 (0.984)	770
22	220	34.35 (1.352)	26.25 (1.033)	700
23	230	35.6 (1.402)	27.5 (1.083)	700
24	240	36.85 (1.451)	28.75 (1.132)	630
25	250	38.1 (1.500)	30.0 (1.181)	630
26	260	39.35 (1.549)	31.25 (1.230)	630
27	270	40.6 (1.598)	32.5 (1.280)	630
28	280	41.85 (1.648)	33.75 (1.329)	560
29	290	43.1 (1.697)	35.0 (1.378)	560
30	300	44.35 (1.746)	36.25 (1.427)	560
31	310	46.6 (1.835)	37.5 (1.476)	490
32	320	47.85 (1.884)	38.75 (1.526)	490
33	330	49.1 (1.933)	40.0 (1.575)	490
34	340	50.35 (1.982)	41.25 (1.624)	490
35	350	51.6 (2.031)	42.5 (1.673)	490
36	360	52.85 (2.081)	43.75 (1.722)	420
37	370	54.1 (2.130)	45.0 (1.772)	420
38	380	55.35 (2.179)	46.25 (1.821)	420
39	390	56.6 (2.228)	47.5 (1.870)	420
40	00 6205 400 500 825	57.85 (2.278)	48.75 (1.919)	420

HOW TO ORDER

00	6205	XX0	500	825
		Number of Contacts		

1.25mm Pitch

Series 6207 - LIF Right Angle SMT

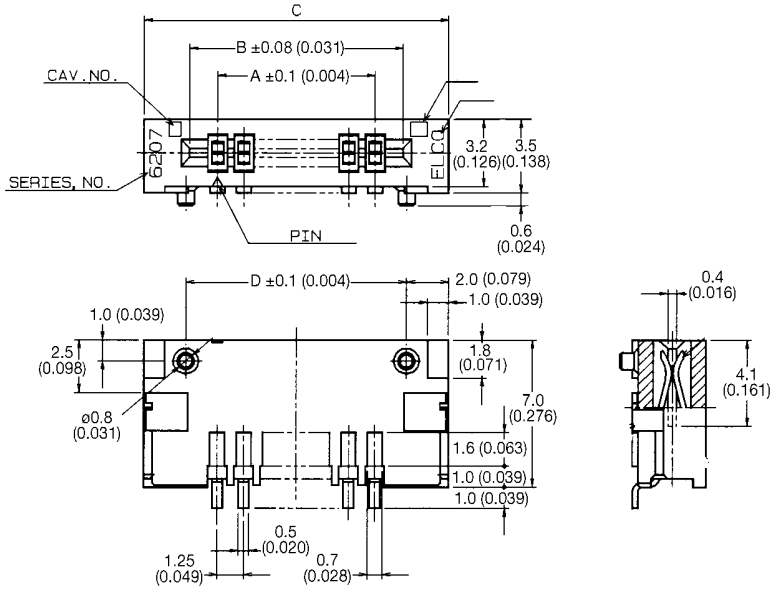

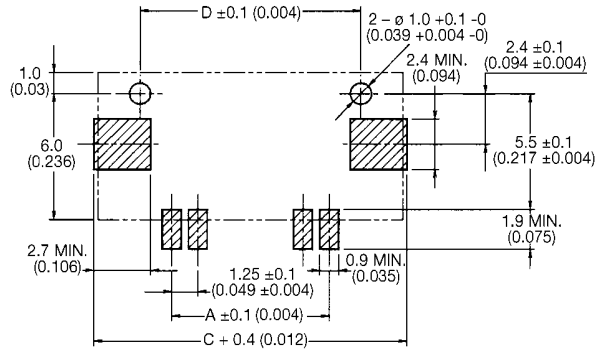

MOUNTING LAYOUT

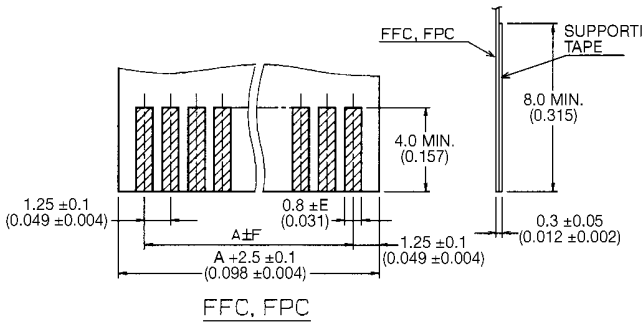

FFC, FPC

Kind	Tolerance	
	E	F
FFC	±0.03	±0.1
FPC	±0.1	±0.05

Specifications

- Number of Contacts – 5-20
- Tube Packaged
- Voltage – 125V
- Current Rating – 1.0 amp max.
- Dielectric Withstanding Voltage – 500V RMS min.
- Operating Temperature – (-20°C - +85°C)
- Contact Material – phosphor bronze (tin-lead plated)
- Insulator Material – glass-filled PPS, (UL 94 V-O) brown color
- FFC/FPC Thickness – 0.3 ±0.05mm (0.012 ±0.002")
- Height – 7.0mm (0.276") vertical, 3.5mm (0.138") right angle

No. of Contacts	Dimension				Qty. Per Tube
	A	B	C	D	
05	5.0 (0.197)	7.66 (0.302)	12.0 (0.472)	8.0 (0.315)	40
06	6.25 (0.246)	8.91 (0.351)	13.25 (0.522)	9.25 (0.364)	36
07	7.5 (0.295)	10.16 (0.400)	14.5 (0.571)	10.5 (0.413)	33
08	8.75 (0.344)	11.41 (0.449)	15.75 (0.620)	11.75 (0.463)	31
09	10.0 (0.394)	12.66 (0.498)	17.0 (0.669)	13.0 (0.512)	28
10	11.25 (0.443)	13.91 (0.548)	18.25 (0.719)	14.25 (0.561)	26
11	12.5 (0.492)	15.16 (0.597)	19.5 (0.768)	15.5 (0.610)	25
12	13.75 (0.541)	16.41 (0.646)	20.75 (0.817)	16.75 (0.659)	23
13	15.0 (0.591)	17.66 (0.695)	22.0 (0.866)	18.0 (0.709)	22
14	16.25 (0.640)	18.91 (0.744)	23.25 (0.915)	19.25 (0.758)	21
15	17.5 (0.689)	20.16 (0.794)	24.5 (0.965)	20.5 (0.807)	20
16	18.75 (0.738)	21.41 (0.843)	25.75 (1.014)	21.75 (0.856)	19
17	20.0 (0.787)	22.66 (0.892)	27.0 (1.063)	23.0 (0.906)	18
18	21.25 (0.837)	23.91 (0.941)	28.25 (1.112)	24.25 (0.955)	17
19	22.5 (0.886)	25.16 (0.991)	29.5 (1.161)	25.5 (1.004)	16
20	23.75 (0.935)	26.41 (1.040)	30.75 (1.211)	26.75 (1.053)	15

HOW TO ORDER

00	6207	3419	XX	000
			Number of Contacts	

Some sizes are available in tape and reel, contact sales office for details

1.25mm Pitch

Series 6207 - LIF Vertical SMT

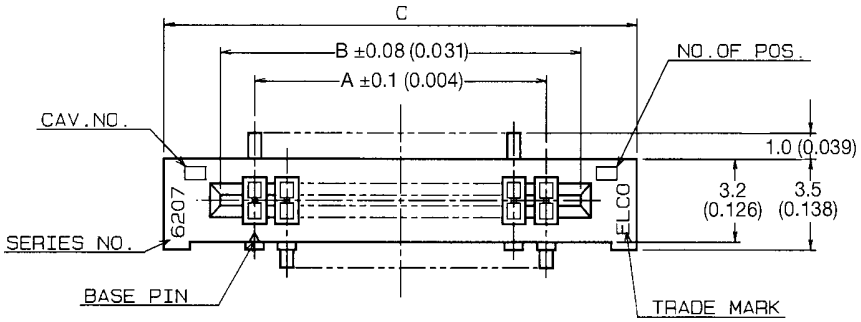

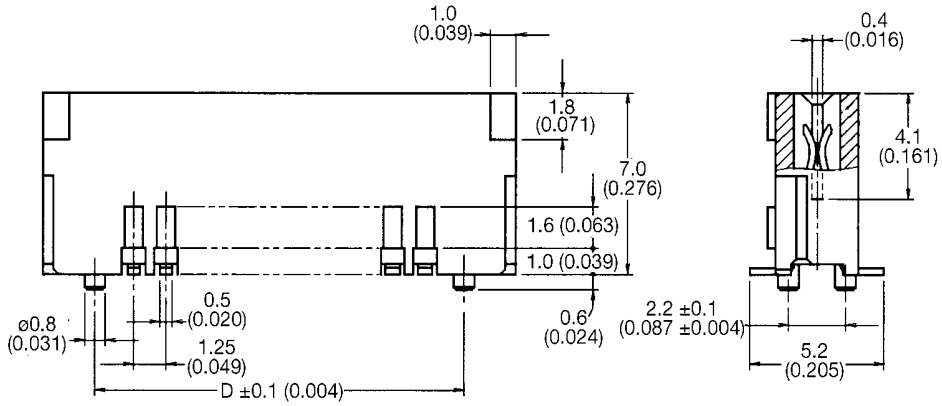

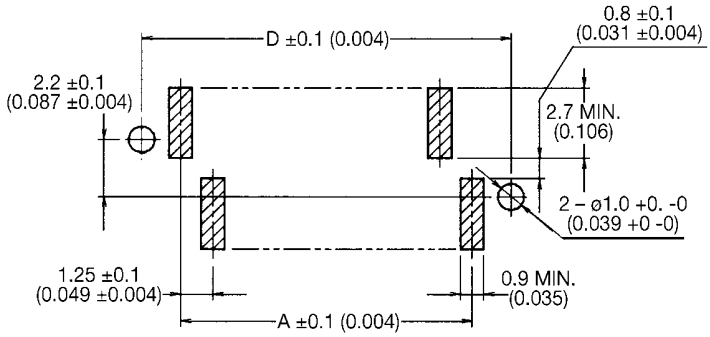

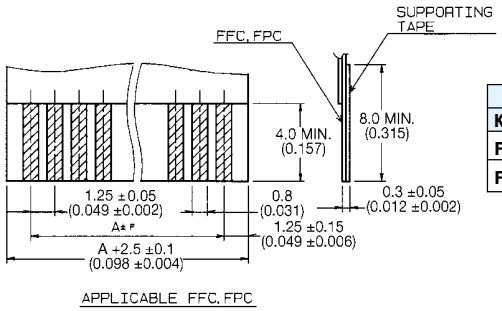

Kind	Tolerance E	Tolerance F
FFC	±0.03	±0.1
FPC	±0.1	±0.05

No. of Contacts	Dimension A	B	C	D	Qty. Per Tube
05	5.0 (0.197)	7.66 (0.302)	12.0 (0.472)	8.0 (0.315)	40
06	6.25 (0.246)	8.91 (0.351)	13.25 (0.522)	9.25 (0.364)	36
07	7.5 (0.295)	10.16 (0.400)	14.5 (0.571)	10.5 (0.413)	33
08	8.75 (0.344)	11.41 (0.449)	15.75 (0.620)	11.75 (0.463)	31
09	10.0 (0.394)	12.66 (0.498)	17.0 (0.669)	13.0 (0.512)	28
10	11.25 (0.443)	13.91 (0.548)	18.25 (0.719)	14.25 (0.561)	26
11	12.5 (0.492)	15.16 (0.597)	19.5 (0.768)	15.5 (0.610)	25
12	13.75 (0.541)	16.41 (0.646)	20.75 (0.817)	16.75 (0.659)	23
13	15.0 (0.591)	17.66 (0.695)	22.0 (0.866)	18.0 (0.709)	22
14	16.25 (0.640)	18.91 (0.744)	23.25 (0.915)	19.25 (0.758)	21
15	17.5 (0.689)	20.16 (0.794)	24.5 (0.965)	20.5 (0.807)	20
16	18.75 (0.738)	21.41 (0.843)	25.75 (1.014)	21.75 (0.856)	19
17	20.0 (0.787)	22.66 (0.892)	27.0 (1.063)	23.0 (0.906)	18
18	21.25 (0.837)	23.91 (0.941)	28.25 (1.112)	24.25 (0.955)	17
19	22.5 (0.886)	25.16 (0.991)	29.5 (1.161)	25.5 (1.004)	16
20	23.75 (0.935)	26.41 (1.040)	30.75 (1.211)	26.75 (1.053)	15

HOW TO ORDER

00	6207	3329	XX	000

Number of Contacts

1.25mm Pitch
Series 6203
LIF Right Angle Through Hole (Bottom Entry Type)

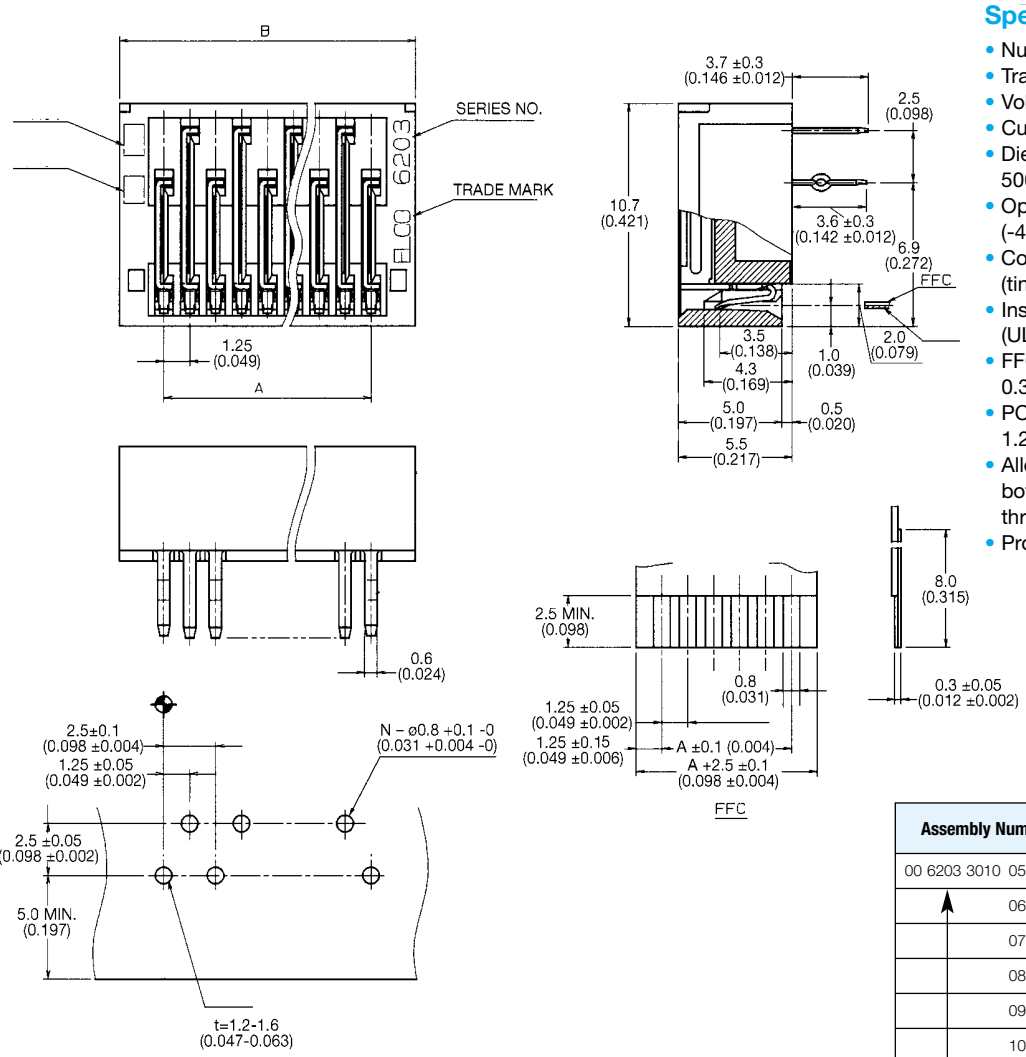

Specifications

- Number of Contacts – 5-15
- Tray Packaged/Box
- Voltage – 125V
- Current Rating – 1.0 amp max.
- Dielectric Withstanding Voltage – 500V RMS min.
- Operating Temperature – (-40°C - +85°C)
- Contact Material – phosphor bronze (tin-lead plated)
- Insulator Material – glass-filled nylon (UL 94 V-O)
- FFC/FPC Thickness – 0.3 ±0.05mm (0.012 ±0.002")
- PCB Thickness – 1.20-1.60mm (0.047-0.063")
- Allows insertion of FFC/FPC from bottom of PC board, at edge or through slit
- Profile Height – 5.50mm (0.217")

Assembly Number	No. of Contacts	A	B	Qty. Per Box
00 6203 3010 05 000	05	5.0 (0.197)	9.28 (0.365)	2960
06	06	6.25 (0.246)	10.53 (0.415)	2640
07	07	7.5 (0.295)	11.78 (0.464)	2320
08	08	8.75 (0.344)	13.03 (0.513)	2080
09	09	10.0 (0.394)	14.28 (0.562)	1920
10	10	11.25 (0.443)	15.53 (0.611)	1760
11	11	12.5 (0.492)	16.78 (0.661)	1600
12	12	13.75 (0.541)	18.03 (0.710)	1520
13	13	15.0 (0.591)	19.28 (0.759)	1440
14	14	16.25 (0.640)	20.53 (0.808)	1360
00 6203 3010 15 000	15	17.5 (0.689)	21.78 (0.857)	1280

HOW TO ORDER

00	6203	3010	XX	000
			Number of Contacts	

1.25mm Pitch

Series 5062 - Vertical Direct Type

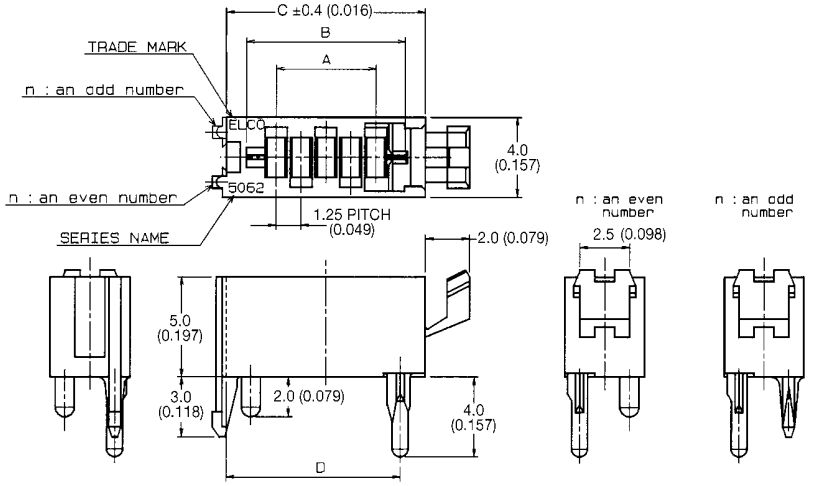

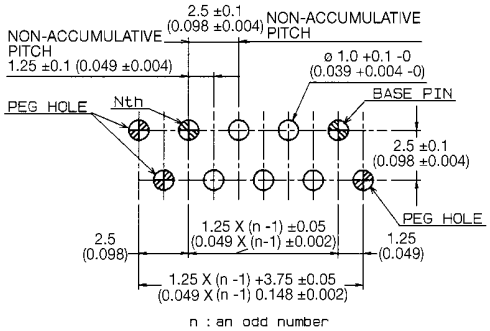

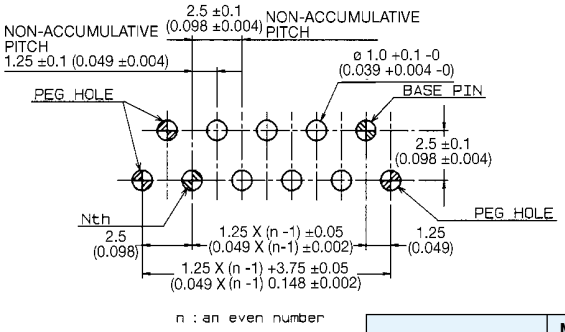

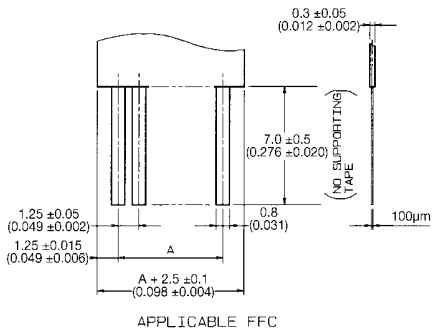

Specifications

- Number of Contacts – 5-23
- Vinyl Bag Packaged
- Voltage – 125V
- Current Rating – 1.0 amp max.
- Dielectric Withstanding Voltage – 500V RMS min.
- Operating Temperature – (-40°C - +85°C)
- Insulator Material – PBT, natural color (UL 94 V-O)
- FFC/FPC Thickness – 0.3 ±0.05mm (0.012 ±0.002")
- PCB Thickness – 1.6mm (0.063")
- Profile Height – 5.0mm (0.197")

Assembly Number	No. of Contacts	A	B	C	D
00 5062 30 10 05 000	05	5.0 (0.197)	7.98 (0.314)	10.0 (0.394)	8.75 (0.344)
06	06	6.25 (0.246)	9.23 (0.363)	11.25 (0.443)	10.0 (0.394)
07	07	7.5 (0.295)	10.48 (0.413)	12.5 (0.492)	11.25 (0.443)
08	08	8.75 (0.344)	11.73 (0.462)	13.75 (0.541)	12.5 (0.492)
09	09	10.0 (0.394)	12.98 (0.511)	15.0 (0.591)	13.75 (0.541)
10	10	11.25 (0.443)	14.23 (0.560)	16.25 (0.640)	15.0 (0.591)
11	11	12.5 (0.492)	15.48 (0.609)	17.5 (0.689)	16.25 (0.640)
12	12	13.75 (0.541)	16.73 (0.659)	18.75 (0.738)	17.5 (0.689)
13	13	15.0 (0.591)	17.98 (0.708)	20.0 (0.787)	18.75 (0.738)
14	14	16.25 (0.640)	19.23 (0.757)	21.25 (0.837)	20.0 (0.787)
15	15	17.5 (0.689)	20.48 (0.806)	22.5 (0.886)	21.25 (0.837)
16	16	18.75 (0.738)	21.73 (0.856)	23.75 (0.935)	22.5 (0.886)
17	17	20.0 (0.787)	22.98 (0.905)	25.0 (0.984)	23.75 (0.935)
18	18	21.25 (0.837)	24.23 (0.954)	26.25 (1.033)	25.0 (0.984)
19	19	22.5 (0.886)	25.48 (1.003)	27.5 (1.083)	26.25 (1.033)
20	20	23.75 (0.935)	26.73 (1.052)	28.75 (1.132)	27.5 (1.083)
21	21	25.0 (0.984)	27.98 (1.102)	30.0 (1.181)	28.75 (1.132)
22	22	26.25 (1.033)	29.23 (1.151)	31.25 (1.230)	30.0 (1.181)
00 5062 30 10 23 000	23	27.5 (1.083)	30.48 (1.200)	32.5 (1.280)	31.25 (1.230)

HOW TO ORDER

00	5062	30	10	XX	000

Number of Contacts

Supplied in packs of 1000.

Internet/FAX/CD Rom/Software

Need Additional Information on AVX Products

Internet –

For more information visit us on the worldwide web at http://www.avxcorp.com

FAX Back Service –

Just dial 1-800-700-2860 and request the index for additional catalog information faxed to your FAX number.

CD ROM –

Or get in touch with your AVX representative for a CD Rom or copies of the catalogs and technical papers.

Software –

Comprehensive capacitor application software library which includes:

SpiCap (for MLC chip capacitors)
SpiTan (for tantalum capacitors)
SpiCalci (for power supply capacitors)
SpiMic (for RF-Microwave capacitors)

AVX Products

PASSIVES

Capacitors
- Multilayer Ceramic
- Tantalum
- Microwave
- Glass
- Film
- Power Film
- Power Ceramic
- Ceramic Disc
- Trimmers

Resistors
- Chip
- Networks/Arrays
- Potentiometers

Timing Devices
- Resonators
- Oscillators
- Crystal

Filters
- EMI
- Bulk
- Saw
- Dielectric

Thin Film
- Inductors
- Fuses
- Capacitors

Integrated Passive Components
- Low Inductance Chip Arrays
- "Z" Chips
- Capacitor Arrays
- Dual Resonance Chips

Voltage Suppressor, Varistors and Thermistors

Acoustical Piezos

Ferrites

CONNECTORS

- 2mm Hard-Metric for CompactPCI®
- Automotive Connectors
- Board to Board Connectors – SMT and Through-Hole
- Card Edge
- Compact Flash
- Custom Designed Connectors
- Customized Backpanel, Racking and Harnessing Services
- DIN 41612 Connectors
- FFC/FPC Connectors
- Insulation Displacement Connectors
- I/O Connectors
- Memory Card Headers and Sockets
- MOBO™, I/O, Board to Board and Battery Connectors
- PCMCIA
- Press-fit Connectors
- Torson, 1.27mm (.050") Board to Board Connectors
- Varicon®
- Wire to Board, Crimp or IDC

NOTICE: Specifications are subject to change without notice. Contact your nearest AVX Sales Office for the latest specifications. All statements, information and data given herein are believed to be accurate and reliable, but are presented without guarantee, warranty, or responsibility of any kind, expressed or implied. Statements or suggestions concerning possible use of our products are made without representation or warranty that any such use is free of patent infringement and are not recommendations to infringe any patent. The user should not assume that all safety measures are indicated or that other measures may not be required. Specifications are typical and may not apply to all applications.

USA

AVX Myrtle Beach, SC
Corporate Offices
Tel: 843-448-9411
FAX: 843-626-5292

AVX Northwest, WA
Tel: 360-669-8746
FAX: 360-699-8751

AVX North Central, IN
Tel: 317-848-7153
FAX: 317-844-9314

AVX Mid/Pacific, MN
Tel: 952-974-9155
FAX: 952-974-9179

AVX Southwest, AZ
Tel: 480-539-1496
FAX: 480-539-1501

AVX South Central, TX
Tel: 972-669-1223
FAX: 972-669-2090

AVX Southeast, NC
Tel: 919-878-6357
FAX: 919-878-6462

AVX Canada
Tel: 905-564-8959
FAX: 905-564-9728

EUROPE

AVX Limited, England
European Headquarters
Tel: ++44 (0)1638 675000
FAX: ++44 (0)1638 675001

AVX S.A., France
Tel: ++33 (1) 69.18.46.00
FAX: ++33 (1) 69.28.73.87

AVX GmbH, Germany - AVX
Tel: ++49 (0) 8131 9004-0
FAX: ++49 (0) 8131 9004-44

AVX GmbH, Germany - Elco
Tel: ++49 (0) 2741 2990
FAX: ++49 (0) 2741 299133

AVX srl, Italy
Tel: ++390 (0)2 614571
FAX: ++390 (0)2 614 2576

AVX Czech Republic, s.r.o.
Tel: ++420 (0)467 558340
FAX: ++420 (0)467 558345

ASIA-PACIFIC

AVX/Kyocera, Singapore
Asia-Pacific Headquarters
Tel: (65) 258-2833
FAX: (65) 350-4880

AVX/Kyocera, Hong Kong
Tel: (852) 2-363-3303
FAX: (852) 2-765-8185

AVX/Kyocera, Korea
Tel: (82) 2-785-6504
FAX: (82) 2-784-5411

AVX/Kyocera, Taiwan
Tel: (886) 2-2696-4636
FAX: (886) 2-2696-4237

AVX/Kyocera, China
Tel: (86) 21-6249-0314-16
FAX: (86) 21-6249-0313

AVX/Kyocera, Malaysia
Tel: (60) 4-228-1190
FAX: (60) 4-228-1196

Elco, Japan
Tel: 045-943-2906/7
FAX: 045-943-2910

Kyocera, Japan - AVX
Tel: (81) 75-604-3426
FAX: (81) 75-604-3425

Kyocera, Japan - KDP
Tel: (81) 75-604-3424
FAX: (81) 75-604-3425

Contact:

A KYOCERA GROUP COMPANY

http://www.avxcorp.com

S-FFC10M1001-N