勝 特 力 材 料 886-3-5753170
胜特力电子(上海) 86-21-34970699
胜特力电子(深圳) 86-755-83298787
Http://www.100y.com.tw

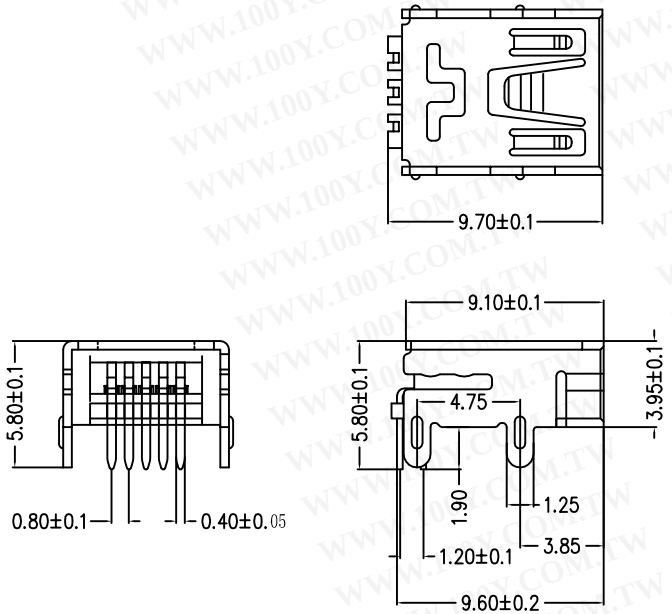

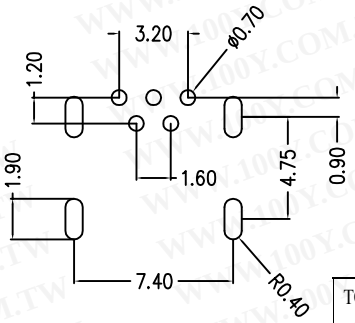

PCB LAYOUT

特性:Specifications:

电器:Electrical:

接触阻抗:Contact Resistance
30 milliohms MAX

耐电压:Dielectric Withstanding Voltage:
500V AC AT Sea LevoL

绝缘阻抗:Insulation Resistance:
100 MEGA ohms MIN

材料:Matorial:

塑胶:Housing:Hing Temperature Thermoplastics,
LCP 耐高温塑胶

端子:Contact: Copper Alloy 铜合金

铜壳:Shell: Copper Alloy 铜合金

电镀:Finish:

端子:Contact: Piated Gold in Mating Area;
Tin On Solder Talls
接触点镀金.脚镀锡

铜壳:Shell:
Nickel/ Plating 镀镍

TOLERANCE UNLESS OTHERWISE SPECIFIED							
XXX ±0.10	DRAM NO	KCD	DATE	DRAW NAME			
XX ±0.20	DWN	林云	11.05.20	MINI USB 5P/F90 度四脚插板铜壳			
X ±0.30	CHK						
X° ±2°	APVD			P/N:			
Third Angle Project	FINISH		UNIT	SCALE	WEIGHT	REV	SHEET
	MATERIAL		mm	1:1		A	1 OF 1