产品编号 : 330013004

Product Description : MX150 Female Terminal for Mat-Sealed Connectors, Gold Plating, 16, 18 and 20 AWG, Left Reel Payoff

系列号 : 33001

状态 : Active

Product Category : Crimp Terminals

文件和资源

图纸

图纸 330013004_sd.pdf

规格

测试摘要 TS-33001-002-001.pdf

产物环境合规

合规

GADSL/IMDS	Compliant with Exemption 44; 34; 33
China RoHS	
EU ELV	Compliant per 2000/53/EC
Low-Halogen Status	Low-Halogen per IEC 61249-2-21
REACH SVHC	Not Contained per D(2023)3788-DC (14 Jun 2023)
EU RoHS	Compliant per EU 2015/863

多部分产品合规性声明

- Eu RoHS
- REACH SVHC
- Low-Halogen

多部分行业合规性文件

- IPC 1752A Class C
- IPC 1752A Class D
- Molex Product Compliance Declaration
- IEC-62474

- chemSHERPA (xml)

欧盟 RoHS 合格证书

产品详情

常规

状态	活动
类别	Crimp Terminals
系列	33001
说明	MX150 Female Terminal for Mat-Sealed Connectors, Gold Plating, 16, 18 and 20 AWG, Left Reel Payoff
应用	Power, Wire-to-Board, Wire-to-Wire
个评论	Left Reel Payoff, Small Polarization Rib
产品系列	MX150 Sealed and Unsealed Connector System
产品名称	MX150
UPC	822350084178

电气

每触点最大电流	Contact Molex
电压 - 最大	14V DC

物理

性别	女
夹具代码	18
材料 - 金属	High Performance Alloy (HPA)
材料 - 接合部位电镀	金牌
材料 - 终端电镀	Unplated
净重	0.435/g
包装形式	Reel
最薄镀层 - 接合部位	0.762µm
最薄镀层 - 端接	2.540µm
终端界面类型	Crimp or Compression
导线绝缘直径	2.54mm max.

线径规格 (AWG)	18, 20
线缆尺寸mm²	0.75-1.00

进程

无铅	不适用

可连接使用部件

描述	产品编号
MX150 Mat-Sealed Dual Row Female Connector Assemblies	33472
MX150 Mat-Sealed Single Row Female Connector Assemblies	33471

施工工具

全局

描述	产品编号
Extraction Toolkit for MX150 Connectors	2002220700
FA2 Mechanical Feed Applicator for MX150 18 Grip Receptacle Terminals, 20 AWG and 0.75mm² Wire	0638082600
FA2 Pneumatic Feed Crimp Applicator for MX150 18 Grip Receptacle, 20 AWGand 0.75mm² Wire	0638082610
FA2 Mechanical Feed Applicator for MX150 18 Grip Female Terminals, 18 AWG and 1.00mm² Wire	0638082800
FA2 Pneumatic Feed Crimp Applicator for MX150 Crimp Terminals, 18 AWG	0638082810
PremiumGrade Hand Crimp Tool for MX150 Female Terminals, 18-22 AWG	0638116000
PremiumGrade Hand Crimp Tool for MX150 Female Terminals for 1.00mm² and 1.50mm² Metric Wires	0638116100
Hand Crimp Tool Metric 0.5 and 0.75	0638116200
Extraction Tool for MX150L, MX150, PT Bulb Socket, iGrid, SPOX, and Wire-to-Motor Terminals	0638131500

FineAdjust Applicator for SRC Connector using MX150 Receptacle Terminals, 0.75mm² wires	0639040400
FineAdjust Applicator for SRC Connector using MX150 Receptacle Terminals, 1.00mm² wires	0639040500
ServiceGrade Hand Crimp Tool for MX150 Crimp Terminals, 14-22 AWG	0640160133

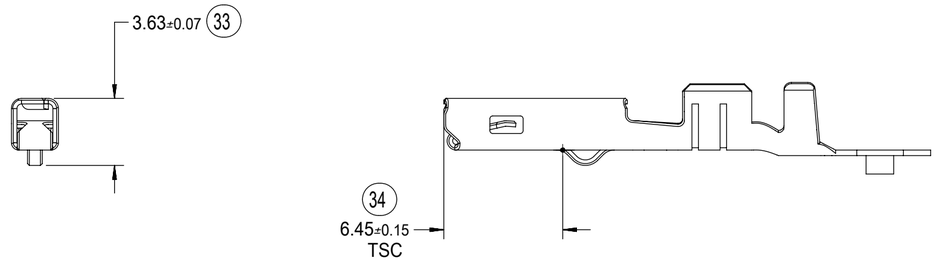

DIMENSIONS FOR LARGE POLARIZATION RIB TERMINAL ONLY

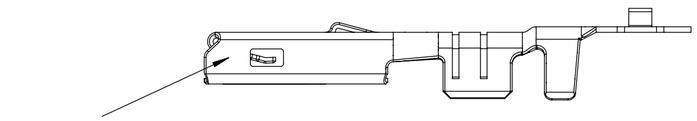

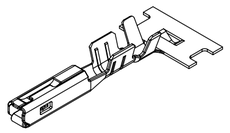

SCALE 2:1

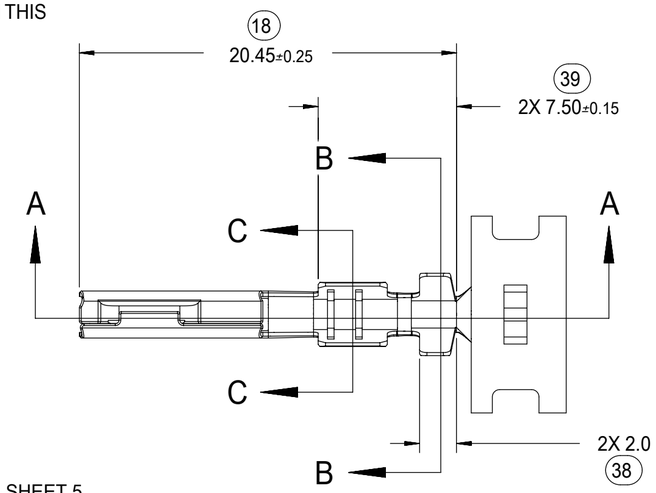

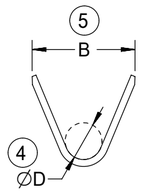

SECTION B-B

SCALE 5:1

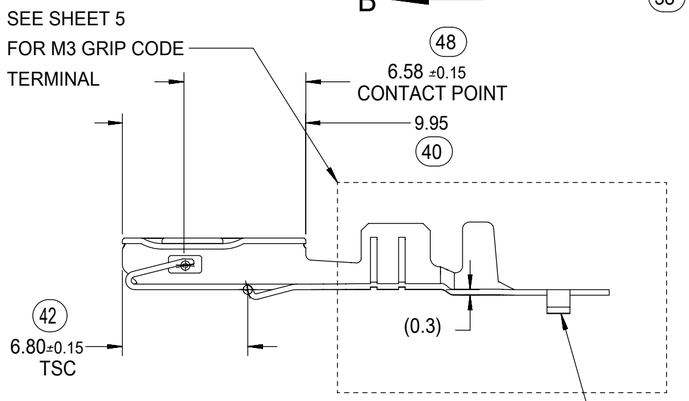

SECTION A-A

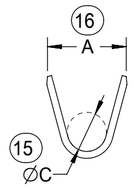

SECTION C-C

SCALE 5:1

CARRIER BUMP DIRECTION
POINTS DOWN FOR TIN PLATED TERMINALS
POINTS UP FOR PRECIOUS PLATED TERMINALS

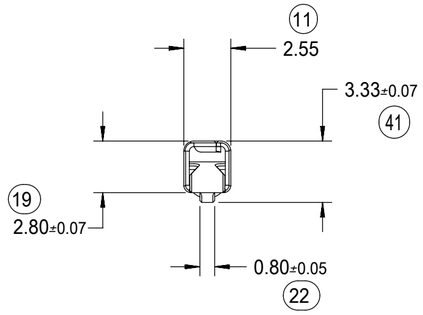

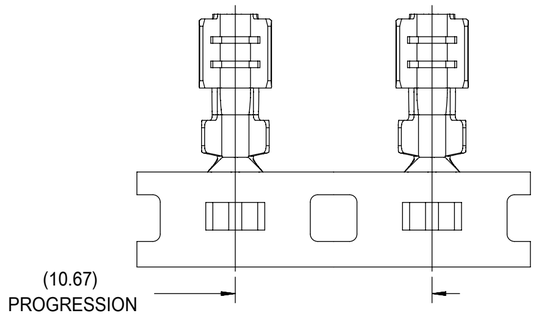

NOTES: (UNLESS OTHERWISE SPECIFIED)

1. MATING TERMINAL SHOWN ON SD-33000-001

2. MATERIAL: ASTM B422, UNS C19025, HR04
   THICKNESS: 0.30 mm ±0.01
   TEMPER: FULL HARD (REF)
   TENSILE: 496 MIN MPA

3. TIN PLATED TERMINAL FINISH:
   OVERALL UNDERPLATE ELECTRODEPOSITED NICKEL
   OVERALL ELECTRODEPOSITED REFLOW TIN

4. GOLD PLATED TERMINAL FINISH
   OVERALL UNDERPLATE ELECTRODEPOSITED DUCTILE SULFAMATE NICKEL
   CONTACT AREA - ELECTRODEPOSITED GOLD
   GRIP AREA - ELECTRODEPOSITED 100% TIN MATTE FINISH

5. SILVER PLATED TERMINAL FINISH
   OVERALL UNDERPLATE ELECTRODEPOSITED DUCTILE SULFAMATE NICKEL
   CONTACT AREA - ELECTRODEPOSITED PURE SILVER (0.5% MAX IMPURITIES) SEMI-BRIGHT FINISH
   - SILVER ANTI-TARNISH : EVABRITE
   GRIP AREA - ELECTRODEPOSITED 100% TIN MATTE FINISH

6. MEETS PERFORMANCE SPECIFICATION FOR CABLE TO TERMINAL ELECTRICAL CRIMPS PER SAE/USCAR-21 (8/2001)

7. MEETS PERFORMANCE STANDARD FOR AUTOMOTIVE ELECTRICAL CONNECTOR SYSTEMS FOR SAE/USCAR-2, REV. 4 (TEMP CLASS 3) (5/2004)

8. MEETS ELECTRICAL CONNECTION SYSTEM DESIGN SPECIFICATION (SDS) REV.11 (5/2002)

9. MEETS FIELD CORRELATED LIFE TEST (FCLT) PER SAE/USCAR-20 (6/2004)

10. MEETS WIRING COMPONENT DESIGN GUIDLINES SAE/USCAR-12 REV 2 (12/2001)

11. TSC ON A DIMENSION TO BE INTERPRETED AS DISTANCE TO A THEORETICAL SHARP CORNER AS IF THE RADIUS WERE NOT PRESENT

12. REFERENCE 97BG-14474-AAB FOR LARGE POLARIZATION RIB CAVITY SPECIFICATION

13. INSERTION FORCE (TIN) AVG. FROM PV TESTING =
    3.8N LARGE POLARIZATION RIB
    3.5N SMALL POLARIZATION RIB
    (REFERENCE)

14. ALL DIMENSIONS EXCEPT (33), (34), (41) & (42) ARE COMMON TO BOTH SMALL AND LARGE POLARIZATION RIB TERMINALS

15. REFERENCE PK-31300-516 FOR REEL DIRECTION

16. REFERENCE AS-33012-002 FOR CRIMP INFORMATION

DOCUMENT STATUS	P1	RELEASE DATE	2020/09/18 18:32:02

SYMBOLS: = 0

THIS DRAWING CONTAINS INFORMATION THAT IS PROPRIETARY TO MOLEX ELECTRONIC TECHNOLOGIES, LLC AND SHOULD NOT BE USED WITHOUT WRITTEN PERMISSION

DIMENSION UNITS	SCALE
mm	4:1

GENERAL TOLERANCES (UNLESS SPECIFIED)

ANGULAR TOL	±	3.0 °
4 PLACES	±	
3 PLACES	±	
2 PLACES	±	0.10
1 PLACE	±	0.3
0 PLACES	±	

DRAFT WHERE APPLICABLE MUST REMAIN WITHIN DIMENSIONS

CURRENT REV DESC:

EC NO: 645050
DRWN: BSKANTHARAJU 2020/09/03
CHK'D: JCUATACERVAN 2020/09/18
APPR: JCUATACERVAN 2020/09/18

INITIAL REVISION:
DRWN: LPULLIAM 2005/06/21
APPR: BMOSER 2005/06/22

THIRD ANGLE PROJECTION | DRAWING: C-SIZE | SERIES: 33012

molex

MX150
RECEPTACLE TERMINAL

PRODUCT CUSTOMER DRAWING

DOCUMENT NUMBER	DOC TYPE	DOC PART	REVISION
SD-33012-002	PSD	001	D

MATERIAL NUMBER	CUSTOMER	SHEET NUMBER
SEE TABLE	GENERAL MARKET	1 OF 5

FORMAT: master-tb-prod-C
REVISION: H
DATE: 2018/01/18

FAMILY	GENDER	SEALING	PLATING	PART NUMBER	PAYOFF DIRECTION	GRIP CODE	WIRE SIZES *	A ±0.30	B ±0.30	C ±0.30	D ±0.30	SPECIAL CHARACTERISTICS
MX150	RECEPTACLE	MAT SEAL	Sn	33012-2001	RIGHT (B)	14	16/14AWG 1.25-2.00mm²	3.9	4.4	1.7	1.6	HIGH PERFORMANCE Sn
				33012-3001	LEFT (D)							
				33012-2002	RIGHT (B)	18	20/18AWG 0.75-1.00mm²	3.3	3.1	1.3	1.4	
				33012-3002	LEFT (D)							
				33012-2003	RIGHT (B)	22	22AWG	2.5	2.6	0.9	1.0	
				33012-3003	LEFT (D)							
				33012-2004	RIGHT (B)	M3	0.35-0.50mm²	2.5	2.7	0.9	1.54 ±0.1	
				33012-3004	LEFT (D)							
			Au	33001-2003	RIGHT (B)	14	16/14AWG 1.25-2.00mm²	3.9	4.4	1.7	1.6	HIGH PERFORMANCE Au
				33001-3003	LEFT (D)							
				33001-2004	RIGHT (B)	18	20/18AWG 0.75-1.00mm²	3.3	3.1	1.3	1.4	
				33001-3004	LEFT (D)							
				33001-2005	RIGHT (B)	22	22AWG	2.5	2.6	0.9	1.0	
				33001-3005	LEFT (D)							
				33001-2006	RIGHT (B)	M3	0.35-0.50mm²	2.5	2.7	0.9	1.54 ±0.1	
				33001-3006	LEFT (D)							
			Ag	33001-4001	RIGHT (B)	14	16/14AWG 1.25-2.00mm²	3.9	4.4	1.7	1.6	HIGH PERFORMANCE Ag
				33001-5001	LEFT (D)							
				33001-4002	RIGHT (B)	18	20/18AWG 0.75-1.00mm²	3.3	3.1	1.3	1.4	
				33001-5002	LEFT (D)							
				33001-4003	RIGHT (B)	22	22AWG	2.5	2.6	0.9	1.0	
				33001-5003	LEFT (D)							
				33001-4005	RIGHT (B)	M3	0.35-0.50mm²	2.5	2.7	0.9	1.54 ±0.1	
				33001-5005	LEFT (D)							
LARGE POLARIZATION RIB - NOT TO BE USED IN MX150 SEALED CONNECTORS												
MX150	RECEPTACLE	UNSEALED	Sn	33012-2021	RIGHT (B)	14	16/14AWG 1.25-2.00mm²	3.9	4.4	1.7	1.6	HIGH PERFORMANCE Sn
				33012-3021	LEFT (D)							
				33012-2022	RIGHT (B)	18	20/18AWG 0.75-1.00mm²	3.3	3.1	1.3	1.4	
				33012-3022	LEFT (D)							
				33012-2023	RIGHT (B)	22	22AWG 0.35-0.50mm²	2.5	2.6	0.9	1.0	
				33012-3023	LEFT (D)							
			Au	33001-2021	RIGHT (B)	14	16/14AWG 1.25-2.00mm²	3.9	4.4	1.7	1.6	HIGH PERFORMANCE Au
				33001-3021	LEFT (D)							
				33001-2022	RIGHT (B)	18	20/18AWG 0.75-1.00mm²	3.3	3.1	1.3	1.4	
				33001-3022	LEFT (D)							
				33001-2023	RIGHT (B)	22	22AWG 0.35-0.50mm²	2.5	2.6	0.9	1.0	
				33001-3023	LEFT (D)							
			Ag	33001-4021	RIGHT (B)	14	16/14AWG 1.25-2.00mm²	3.9	4.4	1.7	1.6	HIGH PERFORMANCE Ag
				33001-5021	LEFT (D)							
				33001-4022	RIGHT (B)	18	20/18AWG 0.75-1.00mm²	3.3	3.1	1.3	1.4	
				33001-5022	LEFT (D)							
				33001-4023	RIGHT (B)	22	22AWG 0.35-0.50mm²	2.5	2.6	0.9	1.0	
				33001-5023	LEFT (D)							

* REFERENCE AS-33012-002 FOR SPECIFIC WIRE TYPES

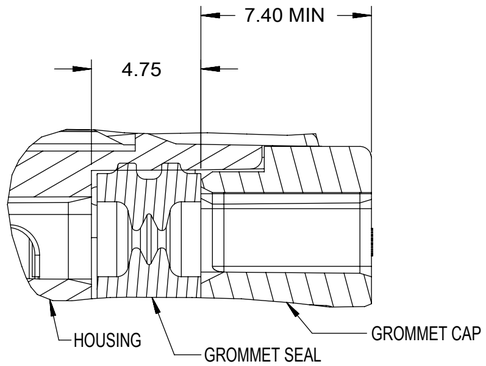

SECTION G-G

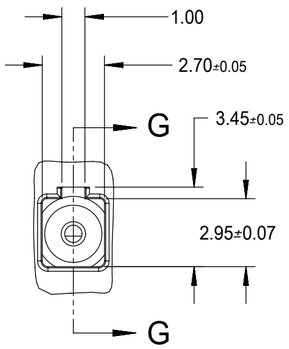

GROMMET CAP OPENING

GROMMET SEAL / CAP CONFIGURATION TO MODIFY LARGE POLARIZATION RIB CAVITY TO ACCEPT SMALL POLARIZATION RIB APPLICATIONS

DOCUMENT STATUS	P1	RELEASE DATE	2020/09/18 18:32:02

THIS DRAWING CONTAINS INFORMATION THAT IS PROPRIETARY TO MOLEX ELECTRONIC TECHNOLOGIES, LLC AND SHOULD NOT BE USED WITHOUT WRITTEN PERMISSION

SYMBOLS: EA = 0; EC = 0; EP = 0; S = 0; = 0; C = 0; = 0; = 0; V = 0

DIMENSION UNITS: mm

SCALE

GENERAL TOLERANCES (UNLESS SPECIFIED)

ANGULAR TOL	±	3.0 °
4 PLACES	±	
3 PLACES	±	
2 PLACES	±	0.10
1 PLACE	±	0.3
0 PLACES	±	

DRAFT WHERE APPLICABLE MUST REMAIN WITHIN DIMENSIONS

CURRENT REV DESC:

EC NO: 645050
DRWN: BSKANTHARAJU 2020/09/03
CHK'D: JCUATACERVAN 2020/09/18
APPR: JCUATACERVAN 2020/09/18

INITIAL REVISION:
DRWN: LPULLIAM 2005/06/21
APPR: BMOSER 2005/06/22

THIRD ANGLE PROJECTION | DRAWING: C-SIZE | SERIES: 33012

molex

MX150
RECEPTACLE TERMINAL

PRODUCT CUSTOMER DRAWING

DOCUMENT NUMBER	DOC TYPE	DOC PART	REVISION
SD-33012-002	PSD	001	D

MATERIAL NUMBER	CUSTOMER	SHEET NUMBER
SEE TABLE	GENERAL MARKET	2 OF 5

FORMAT: master-tb-prod-C
REVISION: H
DATE: 2018/01/18

THIS CHECKING - AID IS FOR SMALL POLARIZATION RIB TERMINALS ONLY

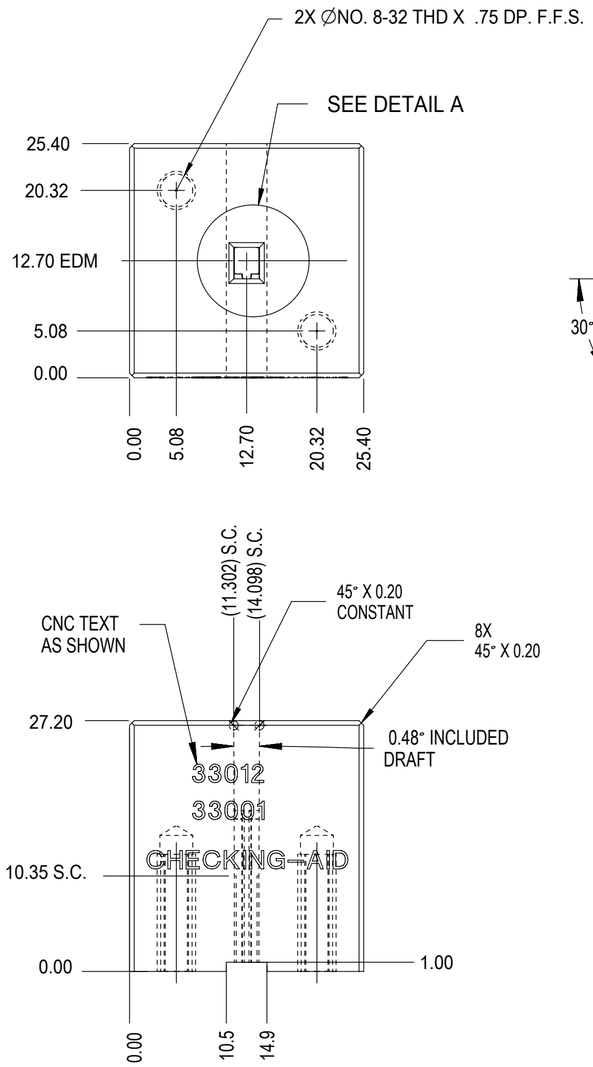

CHECKING - AID
UPPER

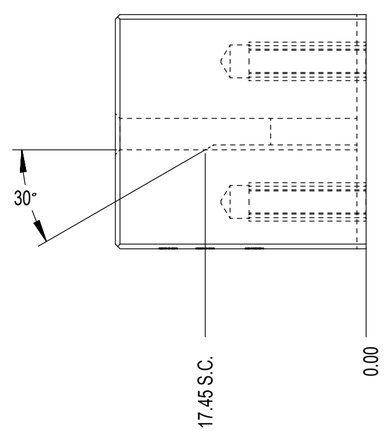

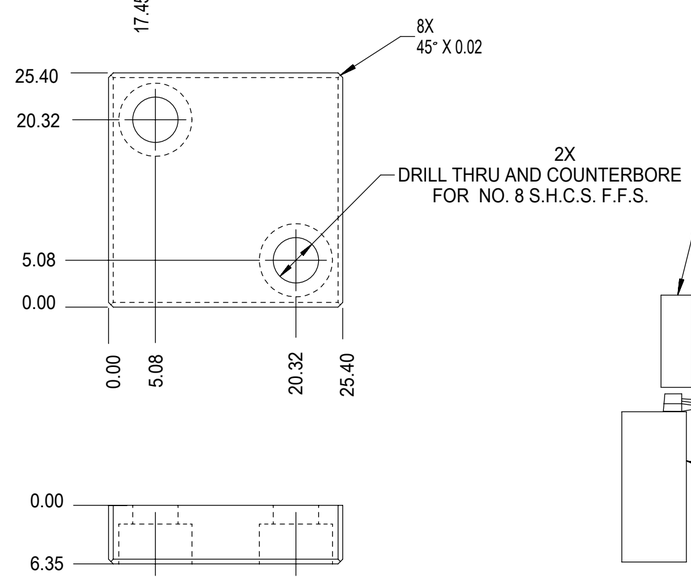

CHECKING - AID
LOWER

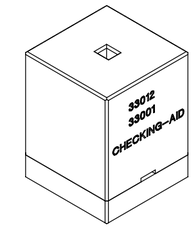

CHECKING - AID ASSEMBLY
SCALE 1:1

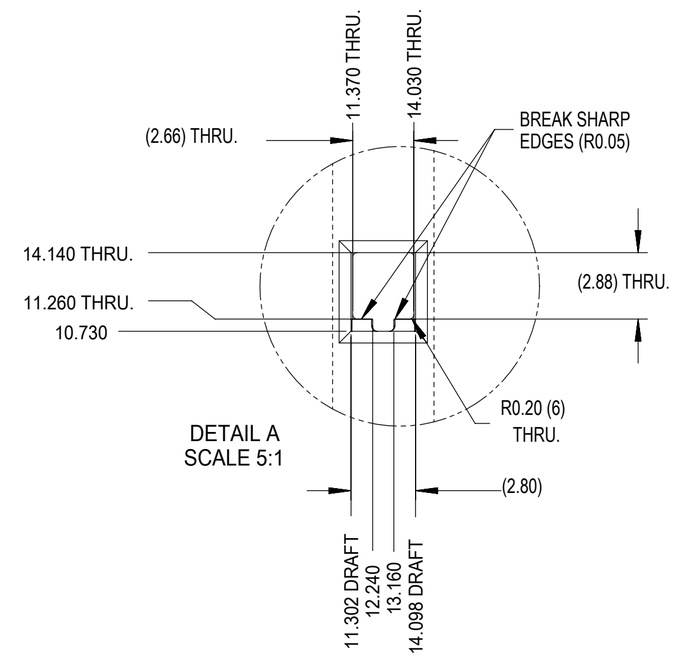

DETAIL A
SCALE 5:1

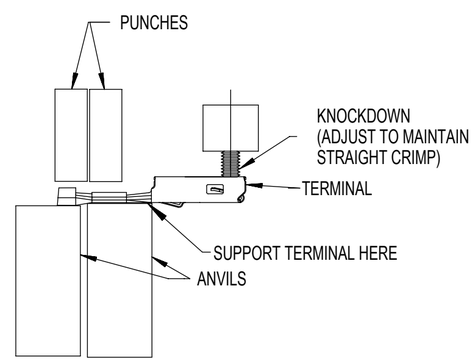

CRIMP REQUIREMENTS:

1. CRIMP STRAIGHTNESS MUST BE MAINTAINED
   USE A KNOCKDOWN TOOL LOCATED AS SHOWN
   TERMINAL BOX MUST NOT BE DEFORMED

2. AFTER CRIMPING, THE CRIMPED TERMINAL (AND UP TO 5 mm OF WIRE PAST THE INSULATOR CUTOFF TAB) MUST FIT FREELY INTO THE CHECKING-AID SHOWN ON THIS PAGE

3. FOR OTHER MECHANICAL REQUIREMENTS ON CRIMPED TERMINALS, REFER TO SAE/USCAR-21 (5-13-02) SECTIONS 4.2 (VISUAL INSPECTION), 4.2 (CROSS SECTION ANALYSIS) AND 4.4 (CONDUCTOR CRIMP PULLOUT FORCE)

UPPER & LOWER
CHECKING-AID
A2 TOOL STEEL
HARDEN & GRIND
ROCKWELL "C" 56-58

SYMBOLS	
EA	= 0
EC	= 0
EP	= 0
S	= 0
▼	= 0
C	= 0
☒	= 0
■	= 0
V	= 0

THIS DRAWING CONTAINS INFORMATION THAT IS PROPRIETARY TO MOLEX ELECTRONIC TECHNOLOGIES, LLC AND SHOULD NOT BE USED WITHOUT WRITTEN PERMISSION

DIMENSION UNITS	SCALE
mm	2:1

GENERAL TOLERANCES (UNLESS SPECIFIED)

ANGULAR TOL	±	3.0 °
4 PLACES	±	
3 PLACES	±	
2 PLACES	±	0.10
1 PLACE	±	0.3
0 PLACES	±	

DRAFT WHERE APPLICABLE MUST REMAIN WITHIN DIMENSIONS

CURRENT REV DESC:

EC NO: 645050
DRWN: BSKANTHARAJU 2020/09/03
CHK'D: JCUATACERVAN 2020/09/18
APPR: JCUATACERVAN 2020/09/18

INITIAL REVISION:
DRWN: LPULLIAM 2005/06/21
APPR: BMOSER 2005/06/22

THIRD ANGLE PROJECTION | DRAWING: C-SIZE | SERIES: 33012

molex

MX150
RECEPTACLE TERMINAL

PRODUCT CUSTOMER DRAWING

DOCUMENT NUMBER	DOC TYPE	DOC PART	REVISION
SD-33012-002	PSD	001	D

MATERIAL NUMBER	CUSTOMER	SHEET NUMBER
SEE TABLE	GENERAL MARKET	3 OF 5

DOCUMENT STATUS	P1	RELEASE DATE	2020/09/18 18:32:02

FORMAT: master-tb-prod-C
REVISION: H
DATE: 2018/01/18

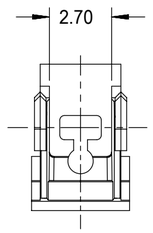

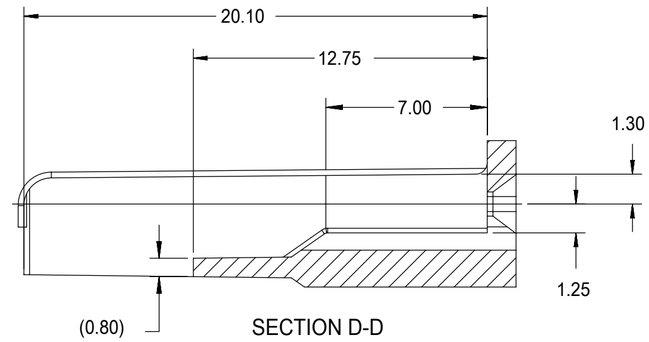

SECTION D-D

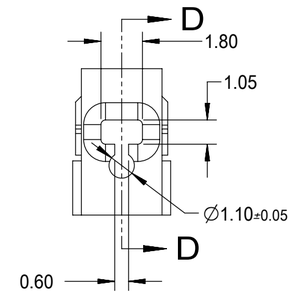

NOTES: UNLESS OTHERWISE SPECIFIED

1. TOLERANCES: LINEAR ±0.10
   ANGULAR ±3°
2. ALL DRAFT WITHIN TOLERANCE.
3. MAX RADII ON ALL CORNERS SHOWN SHARP: 0.10
4. MAX FLASH PERMISSIBLE: 0.1
5. EJECTOR PIN MARKS PERMISSIBLE IF FLUSH TO 0.25 BELOW SURFACE.
6. MATERIAL: HOUSING/FINGER SPECIFICATION ENGINEERED FOR MATERIAL WITH THE FOLLOWING PROPERTIES:
   A. FLEXURAL MODULUS = 4,500 TO 9,400 MPa PER ASTM TEST D790
   B. ELONGATION AT YIELD = 2.3% OR BETTER PER ASTM TEST D638 TYPE V
7. CAVITY SPEC FOR USE ONLY WITH MOLEX RECEPTACLE TERMINAL PART NUMBERS SPECIFIED ELSEWHERE ON THIS DRAWING

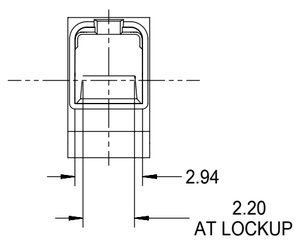

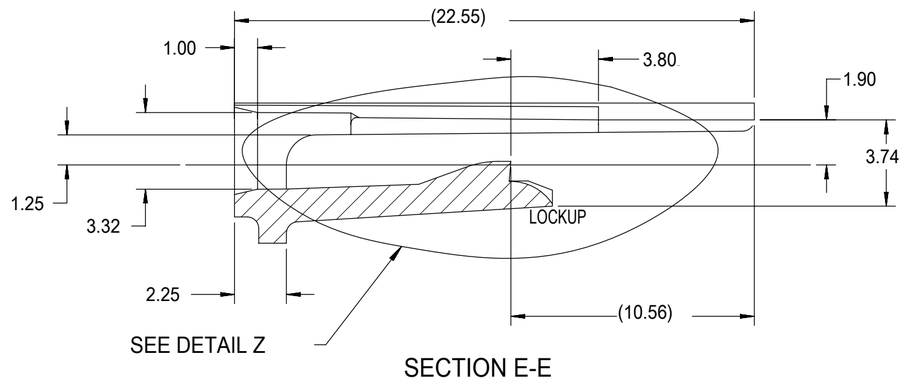

SECTION E-E

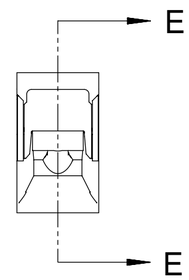

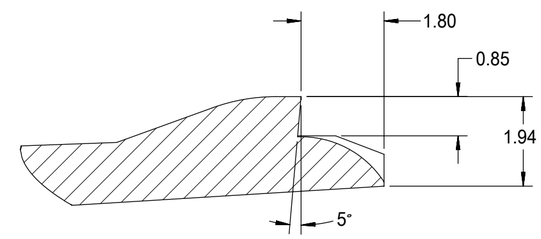

DETAIL Z
SCALE 20:1

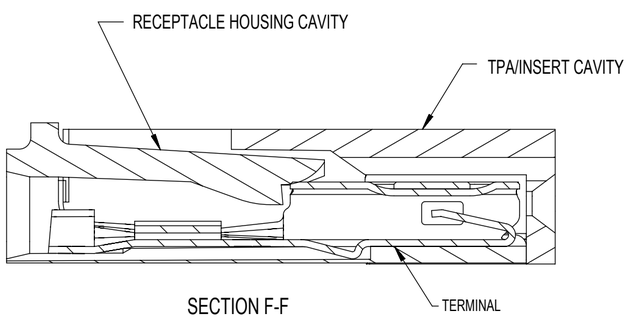

SECTION F-F

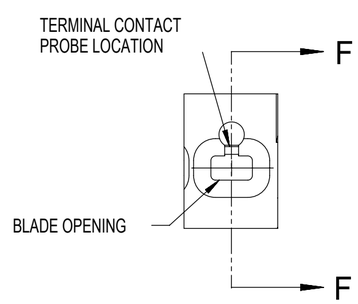

RECEPTACLE CAVITY ASSEMBLED VIEWS
FOR SMALL POLARIZATION RIB APPLICATIONS
FIG. 1

PREFERRED PROBING LOCATION
IS NOT ON SPRING MEMBER

IF ELECTRICAL CONTINUITY PROBE
TOUCHES SPRING MEMBER USE
PROBING AS SHOWN IN FIG. 2

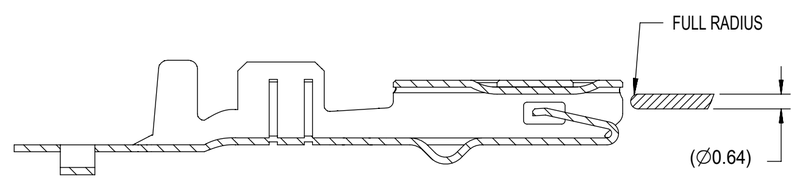

SECTION D-D
FOR LARGE POLARIZATION RIB APPLICATIONS
FIG. 2

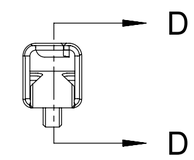

PROBING DOWN THE
THROAT MUST USE
THIS TERMINAL PROBE

FOR PROBING INFORMATION REFERENCE
MOLEX MX150 APPLICATION SPEC AS-33472-100

SYMBOLS	
EA	= 0
EC	= 0
EP	= 0
S	= 0
▼	= 0
C	= 0
☒	= 0
■	= 0
V	= 0

THIS DRAWING CONTAINS INFORMATION THAT IS PROPRIETARY TO MOLEX ELECTRONIC TECHNOLOGIES, LLC AND SHOULD NOT BE USED WITHOUT WRITTEN PERMISSION

DIMENSION UNITS	SCALE
mm	5:1

GENERAL TOLERANCES (UNLESS SPECIFIED)

ANGULAR TOL	±	3.0 °
4 PLACES	±	
3 PLACES	±	
2 PLACES	±	0.10
1 PLACE	±	0.3
0 PLACES	±	

DRAFT WHERE APPLICABLE MUST REMAIN WITHIN DIMENSIONS

CURRENT REV DESC:

EC NO:	645050	
DRWN:	BSKANTHARAJU	2020/09/03
CHK'D:	JCUATACERVAN	2020/09/18
APPR:	JCUATACERVAN	2020/09/18

INITIAL REVISION:

DRWN:	LPULLIAM	2005/06/21
APPR:	BMOSER	2005/06/22

THIRD ANGLE PROJECTION | DRAWING: C-SIZE | SERIES: 33012

molex

MX150
RECEPTACLE TERMINAL

PRODUCT CUSTOMER DRAWING

DOCUMENT NUMBER	DOC TYPE	DOC PART	REVISION
SD-33012-002	PSD	001	D

MATERIAL NUMBER	CUSTOMER	SHEET NUMBER
SEE TABLE	GENERAL MARKET	4 OF 5

DOCUMENT STATUS	P1	RELEASE DATE	2020/09/18 18:32:02

FORMAT: master-tb-prod-C
REVISION: H
DATE: 2018/01/18

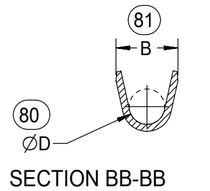

SECTION BB-BB

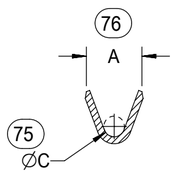

SECTION CC-CC

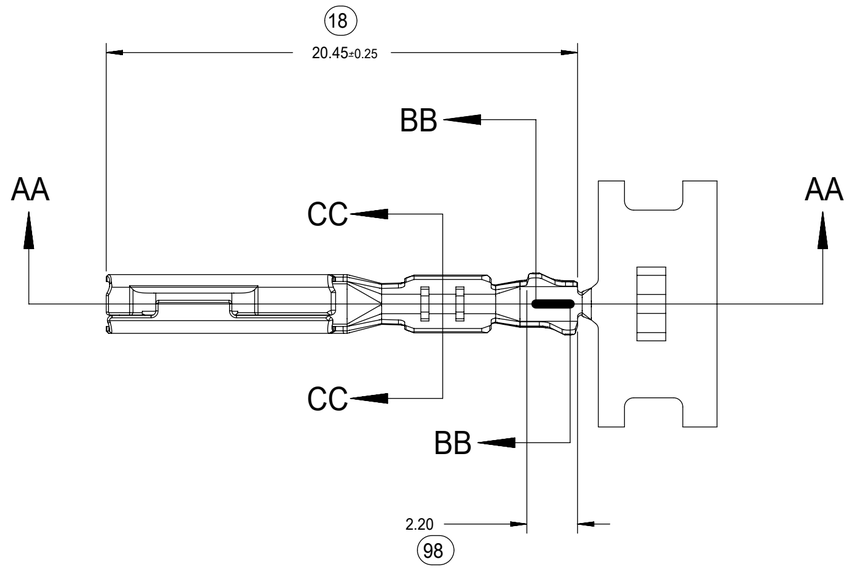

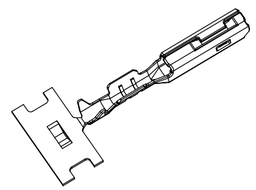

ISO VIEW
SCALE 2:1

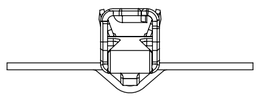

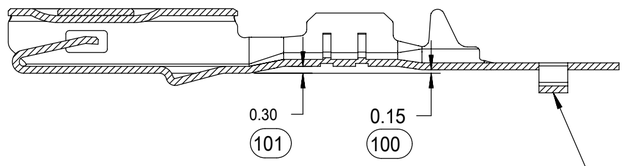

SECTION AA-AA
M3 GRIP CODE TERMINAL
SEE TABLE (SHEET 2) FOR PART NUMBERS

CARRIER BUMP DIRECTION
POINTS DOWN FOR TIN PLATED TERMINAL
POINTS UP FOR PRECIOUS METAL PLATED
TERMINAL

SYMBOLS	
FA	= 0
FC	= 0
FP	= 0
S	= 0
▼	= 0
C	= 0
☒	= 0
■	= 0
V	= 0

THIS DRAWING CONTAINS INFORMATION THAT IS PROPRIETARY TO MOLEX ELECTRONIC TECHNOLOGIES, LLC AND SHOULD NOT BE USED WITHOUT WRITTEN PERMISSION

DIMENSION UNITS	SCALE
mm	5:1

GENERAL TOLERANCES (UNLESS SPECIFIED)

ANGULAR TOL	±	3.0 °
4 PLACES	±	
3 PLACES	±	
2 PLACES	±	0.10
1 PLACE	±	0.3
0 PLACES	±	

DRAFT WHERE APPLICABLE MUST REMAIN WITHIN DIMENSIONS

CURRENT REV DESC:

EC NO: 645050
DRWN: BSKANTHARAJU 2020/09/03
CHK'D: JCUATACERVAN 2020/09/18
APPR: JCUATACERVAN 2020/09/18

INITIAL REVISION:
DRWN: LPULLIAM 2005/06/21
APPR: BMOSER 2005/06/22

THIRD ANGLE PROJECTION | DRAWING: C-SIZE | SERIES: 33012

molex

MX150
RECEPTACLE TERMINAL

PRODUCT CUSTOMER DRAWING

DOCUMENT NUMBER	DOC TYPE	DOC PART	REVISION
SD-33012-002	PSD	001	D

MATERIAL NUMBER	CUSTOMER	SHEET NUMBER
SEE TABLE	GENERAL MARKET	5 OF 5

DOCUMENT STATUS	P1	RELEASE DATE	2020/09/18 18:32:02

FORMAT: master-tb-prod-C
REVISION: H
DATE: 2018/01/18