THIS DRAWING IS UNPUBLISHED. RELEASED FOR PUBLICATION -,- .
© COPYRIGHT - By - ALL RIGHTS RESERVED.

LOC	DIST
DF	DO

REVISIONS

P	LTR	DESCRIPTION	DATE	DWN	APVD
	V	REV PER ECO-12-007856	25APR12	PY	RL

WHEN ORDERING CONTACT ON TAPE, ORDER BY THE TAPE NUMBER PLUS THE PACKAGING CODE AS FOLLOWS:

2. FOR USE WITH AMP TAPETRONIC, PNEUMATIC TOOL–
   A. 1000 PARTS TO A BOX ADD PACKAGING CODE: 1MBOX

3. FOR USE WITH 4/8 INDENT STRIPPER CRIMP–
   A. 1000 PARTS TO A REEL ADD PACKAGING CODE: 1MREEL
   B. 5000 PARTS TO A REEL ADD PACKAGING CODE: 5MREEL

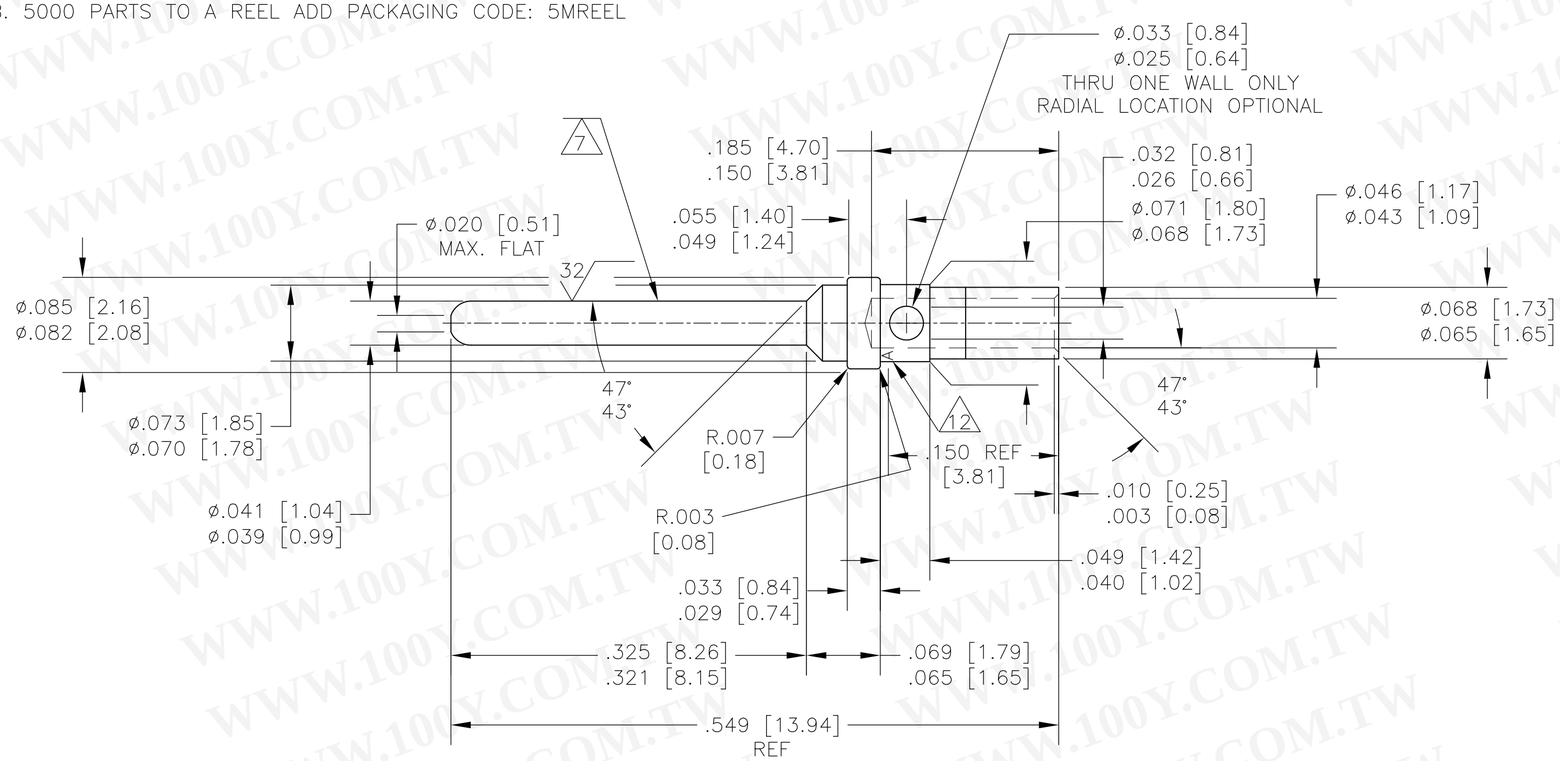

1. MATERIAL: COPPER ALLOY PER MIL–C–39029 & MIL–DTL–24308.
2. ALL DIMENSIONS APPLY AFTER PLATING.
3. THIS DRAWING COMPLIES WITH SPECIFICATION MIL–C–39029/64 & M24308/11–1.
4. ALL DIAMETERS CONCENTIC WITH EACH OTHER WITHIN .004 T.I.R.
5. PIN MATES WITH SOCKET 205090 (MIL–C–39029/63).
6. ALL SURFACES HAVE 63 OR BETTER FINISH, UNLESS SHOWN.
7. POINT OF PLATING MEASUREMENT .188 [4.78] FROM TIP OF PIN.
8. PLATING: GOLD PER ASTM–B–488 (TYPEII) OVER NICKEL PER QQ–N–290.
9. PLATING: GOLD PER ASTM–B–488 (TYPEII) OVER COPPER PER MIL–C–14550, CLASS 4.
10. PLATING: GOLD PER ASTM–B–488 (TYPE II, CLASS 0) OVER NICKEL PER QQ–N–290.
11. PLATING:
    MATING AREA: GOLD PER ASTM–B–488 (TYPE II) OVER NICKEL PER QQ–N–290.
    NON MATING AREA: GOLD PER ASTM–B–488 OVER NICKEL PER QQ–N–290.
12. MANUFACTURER'S LOGO ("A" OR "– . .") LOCATION OPTIONAL

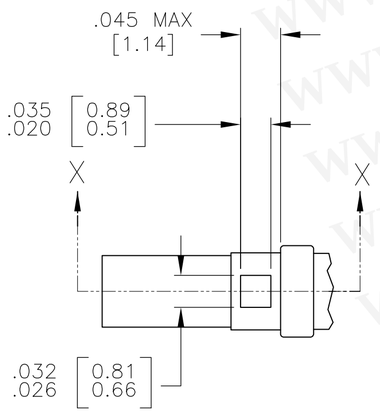

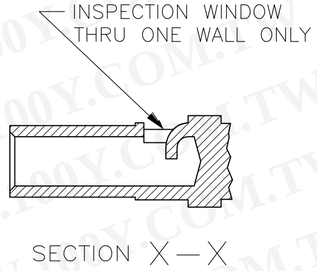

SECTION X—X

INSPECTION WINDOW OPTIONAL DESIGN 16

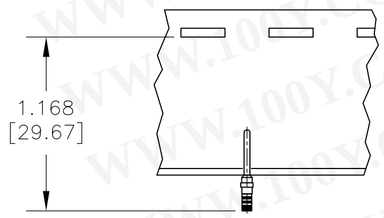

COLOR BANDS
PART NO 205089–1 ONLY

WITHOUT COLOR CODE	8	1–205089–1
WITHOUT COLOR CODE	10	1–205089–0
WITHOUT COLOR CODE	9	205089–4
CONTACT ON TAPE	SAME AS –1	205089–2
AS SHOWN	11	205089–1
DESCRIPTION	PLATING	PART NO.

勝 特 力 材 料 886-3-5753170
胜特力电子(上海) 86-21-34970699
胜特力电子(深圳) 86-755-83298787
Http://www.100y.com.tw

THIS DRAWING IS A CONTROLLED DOCUMENT.

DIMENSIONS: INCHES

TOLERANCES UNLESS OTHERWISE SPECIFIED:
0 PLC ± –
1 PLC ± –
2 PLC ± –
3 PLC ± –
4 PLC ± –
ANGLES ± –

MATERIAL 1
FINISH –

DWN	J. KAISER	25AUG2003
CHK	D. MILLER	10-13-03
APVD	D. MILLER	10-13-03
PRODUCT SPEC	—	
APPLICATION SPEC	—	
WEIGHT	—	

CUSTOMER DRAWING

TE Connectivity

NAME: PIN SIZE 20 CONTACT, AMPLIMITE

SIZE	CAGE CODE	DRAWING NO	RESTRICTED TO
A2	00779	C-205089	—

SCALE 10:1 SHEET 1 OF 1 REV V

205089

1471-9 (3/11)