COB MFG	TYPE	DIM 'A'	DIM 'B'	THICKNESS	DIM 'C'
CREE	CXA2520	23.85	23.85	1.15	21.0
CREE	CXA2530	23.85	23.85	1.15	21.0
CREE	CXA2540	23.85	23.85	1.15	21.0
CREE	CXA2590	23.85	23.85	1.00	21.0
CREE	CXB2530	23.85	23.85	1.15	21.0
CREE	CXB2540	23.85	23.85	1.15	21.0
OSRAM	SOLERIQ S19	24.00	24.00	0.90	19.8

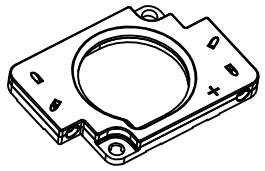

ISO VIEW
SCALE 1:1

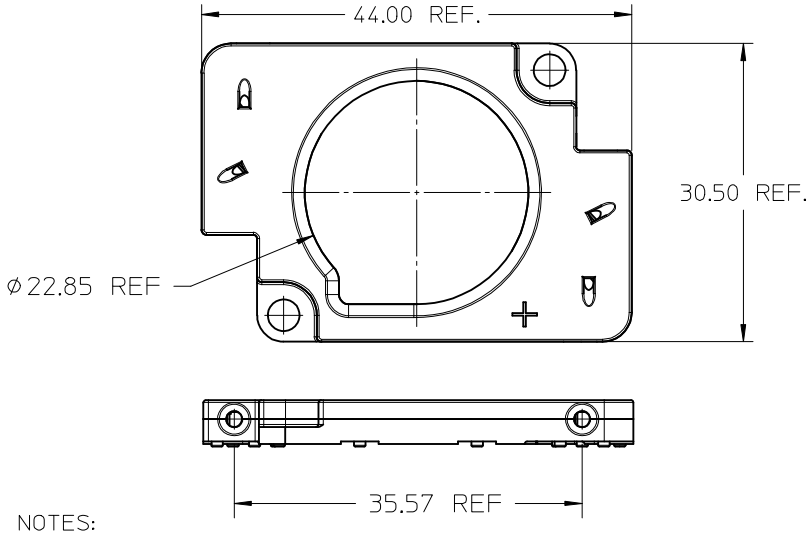

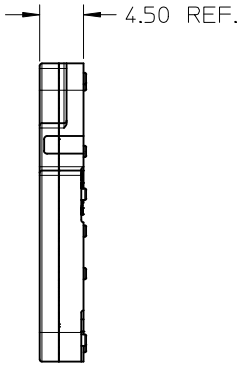

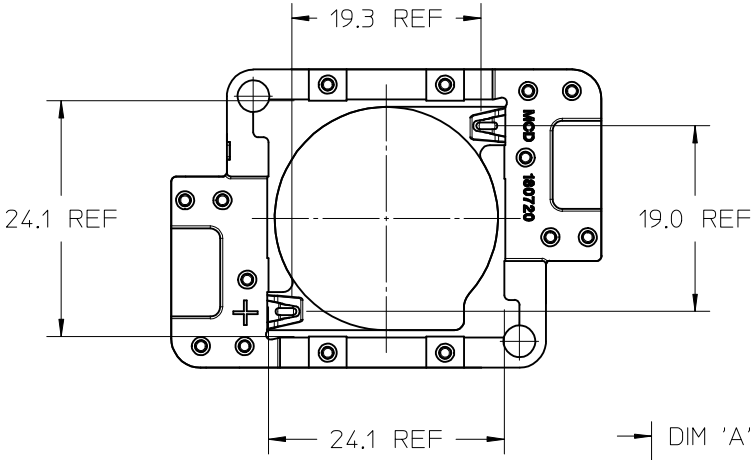

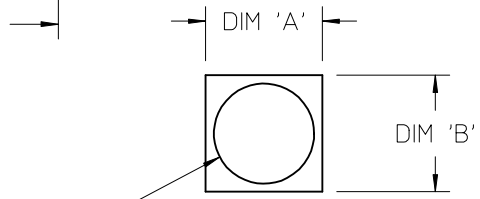

COB LED
SCALE 1:1

NOTES:
1) MATERIALS:
   a. TOP HOUSING: WHITE COLOR PBT 30% GF UL94V-0
   b. BOTTOM HOUSING: WHITE COLOR PBT 30% GF UL94V-0
2) WIRE TRAP TERMINALS: COPPER ALLOY
   a. FINISH: SELECTIVE GOLD OVER NICKEL
3) THIS PRODUCT IS ELV AND ROHS COMPLIANT
4) APPLICABLE WIRE GAUGE - 18, 20 OR 22 AWG
   a. SOLID WIRE IS RECOMMENDED
   b. IF STRANDED WIRE IS USED, PRE-TINNED IS RECOMMENDED
   c. 11.0mm±1.0mm STRIP LENGTH IS RECOMMENDED
5) MOUNT HOLDER USING M3 SCREWS (2): 0.4 NEWTON METER MINIMUM, 0.8 NEWTON METER MAXIMUM TORQUE.
6) UL:OLFB2 UL496 FILE: E345583.

ENTER DESCRIPTION
EC NO: SSL2017-0018
DRWN:LZABJANOVSKI 2016/11/17
CHKD:
APPR:GMEYER 2016/11/18
DESCRIPTION
A4
REV

QUALITY SYMBOLS
E/A=0
E/C=0
E/P=0

GENERAL TOLERANCES (UNLESS SPECIFIED)

	mm	INCH
4 PLACES	± ---	± ---
3 PLACES	± ---	± ---
2 PLACES	± ---	± ---
1 PLACE	± ---	± ---
0 PLACE	± ---	± ---
ANGULAR ±1/2°		

DRAFT WHERE APPLICABLE MUST REMAIN WITHIN DIMENSIONS

DIMENSION STYLE: MM ONLY
SCALE: 2:1
DESIGN UNITS: METRIC
THIRD ANGLE PROJECTION

DRAWN BY: CCARRANZA DATE: 2012/10/26
CHECKED BY: CCARRANZA DATE: 2012/11/06
APPROVED BY: DMCGOWAN DATE: 2012/11/06

TITLE: COB LED HOLDER 23.85MM X 23.85MM SQUARE

molex

MATERIAL NO.: 1807200001
DOCUMENT NO.: SD-180720-001
SHEET NO.: 1 OF 2
SIZE: B

THIS DRAWING CONTAINS INFORMATION THAT IS PROPRIETARY TO MOLEX INCORPORATED AND SHOULD NOT BE USED WITHOUT WRITTEN PERMISSION

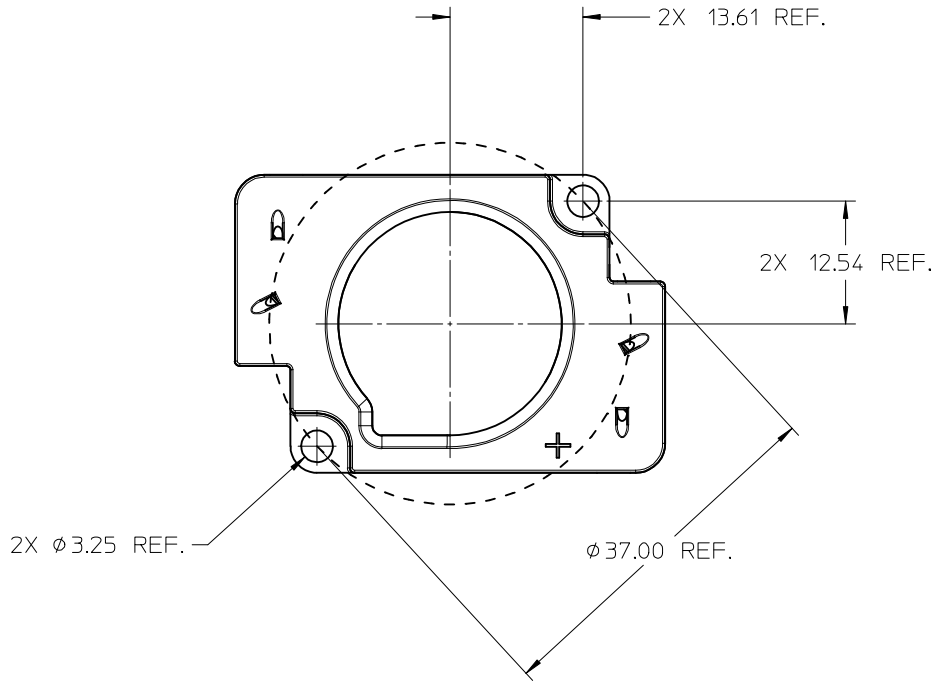

RECOMMENDED MOUNTING DIMENSIONS

ENTER DESCRIPTION EC NO: SSL2017-0018 DRWN:LZABJANOVSKI 2016/11/17 CH'KD: APPR:GMEYER 2016/11/18 A4	DESCRIPTION REV	QUALITY SYMBOLS $\sqrt{F_A}$=0 $\sqrt{F_C}$=0 $\sqrt{F_P}$=0	GENERAL TOLERANCES (UNLESS SPECIFIED) mm / INCH 4 PLACES ± --- / ± --- 3 PLACES ± --- / ± --- 2 PLACES ± --- / ± --- 1 PLACE ± --- / ± --- 0 PLACE ± --- / ± --- ANGULAR ±1/2° DRAFT WHERE APPLICABLE MUST REMAIN WITHIN DIMENSIONS	DIMENSION STYLE MM ONLY DRAWN BY CCARRANZA DATE 2012/10/26 CHECKED BY CCARRANZA DATE 2012/11/06 APPROVED BY DMCGOWAN DATE 2012/11/06 MATERIAL NO. 1807200001 SIZE B	SCALE 2:1 DESIGN UNITS METRIC THIRD ANGLE PROJECTION TITLE COB LED HOLDER 23.85MM X 23.85MM SQUARE molex DOCUMENT NO. SD-180720-001 SHEET NO. 2 OF 2	THIS DRAWING CONTAINS INFORMATION THAT IS PROPRIETARY TO MOLEX INCORPORATED AND SHOULD NOT BE USED WITHOUT WRITTEN PERMISSION

tb_frame_B_P_AM_T
Rev. G 2012/01/11

COB MFG	TYPE	DIM 'A'	DIM 'B'	THICKNESS	DIM 'C'
CREE	CXA2520	23.85	23.85	1.15	21.0
CREE	CXA2530	23.85	23.85	1.15	21.0
CREE	CXA2540	23.85	23.85	1.15	21.0
CREE	CXA2590	23.85	23.85	1.00	21.0
CREE	CXB2530	23.85	23.85	1.15	21.0
CREE	CXB2540	23.85	23.85	1.15	21.0
OSRAM	SOLERIQ S19	24.00	24.00	0.90	19.8

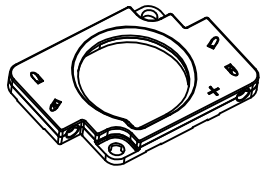

ISO VIEW
SCALE 1:1

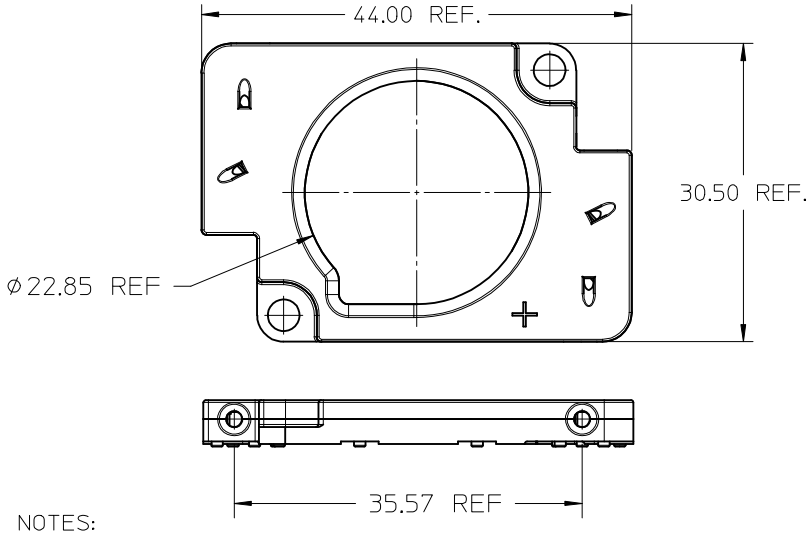

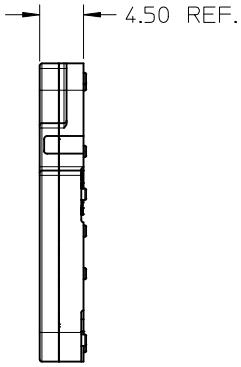

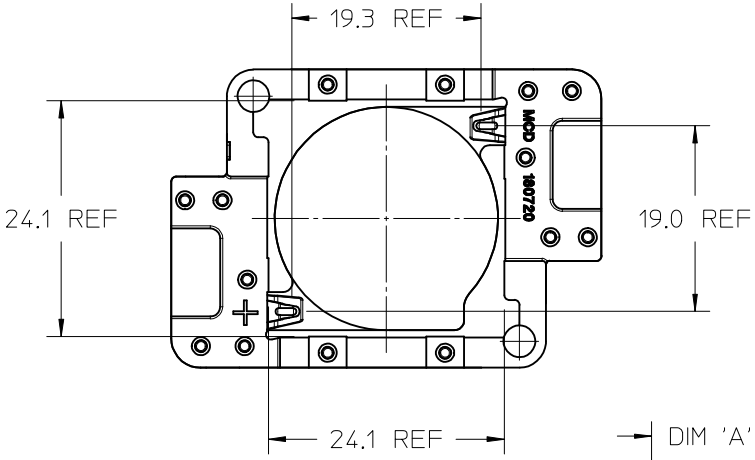

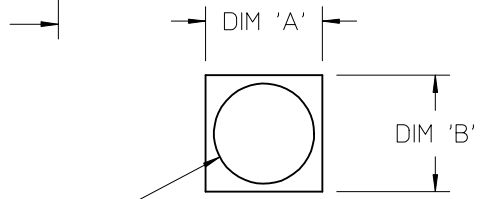

COB LED
SCALE 1:1

NOTES:
1) MATERIALS:
   a. TOP HOUSING: WHITE COLOR PBT 30% GF UL94V-0
   b. BOTTOM HOUSING: WHITE COLOR PBT 30% GF UL94V-0
2) WIRE TRAP TERMINALS: COPPER ALLOY
   a. FINISH: SELECTIVE GOLD OVER NICKEL
3) THIS PRODUCT IS ELV AND ROHS COMPLIANT
4) APPLICABLE WIRE GAUGE - 18, 20 OR 22 AWG
   a. SOLID WIRE IS RECOMMENDED
   b. IF STRANDED WIRE IS USED, PRE-TINNED IS RECOMMENDED
   c. 11.0mm±1.0mm STRIP LENGTH IS RECOMMENDED
5) MOUNT HOLDER USING M3 SCREWS (2): 0.4 NEWTON METER MINIMUM, 0.8 NEWTON METER MAXIMUM TORQUE.
6) UL:OLFB2 UL496 FILE: E345583.

ENTER DESCRIPTION
EC NO: SSL2017-0018
DRWN:LZABJANOVSKI 2016/11/17
CHKD:
APPR:GMEYER 2016/11/18
DESCRIPTION
A4
REV

QUALITY SYMBOLS
E/A=0
E/C=0
E/P=0

GENERAL TOLERANCES (UNLESS SPECIFIED)

	mm	INCH
4 PLACES	± ---	± ---
3 PLACES	± ---	± ---
2 PLACES	± ---	± ---
1 PLACE	± ---	± ---
0 PLACE	± ---	± ---
ANGULAR ±1/2°		

DRAFT WHERE APPLICABLE MUST REMAIN WITHIN DIMENSIONS

DIMENSION STYLE: MM ONLY
SCALE: 2:1
DESIGN UNITS: METRIC
THIRD ANGLE PROJECTION

DRAWN BY: CCARRANZA DATE: 2012/10/26
CHECKED BY: CCARRANZA DATE: 2012/11/06
APPROVED BY: DMCGOWAN DATE: 2012/11/06

TITLE: COB LED HOLDER 23.85MM X 23.85MM SQUARE

molex

MATERIAL NO.: 1807200001
DOCUMENT NO.: SD-180720-001
SHEET NO.: 1 OF 2
SIZE: B

THIS DRAWING CONTAINS INFORMATION THAT IS PROPRIETARY TO MOLEX INCORPORATED AND SHOULD NOT BE USED WITHOUT WRITTEN PERMISSION

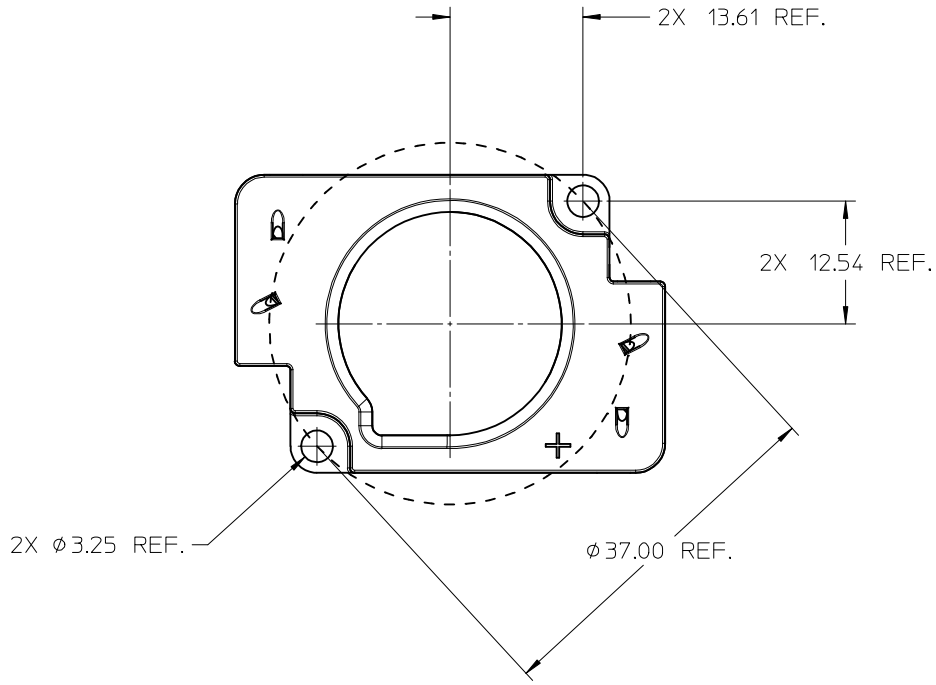

RECOMMENDED MOUNTING DIMENSIONS

ENTER DESCRIPTION EC NO: SSL2017-0018 DRWN:LZABJANOVSKI 2016/11/17 CH'KD: APPR:GMEYER 2016/11/18 A4	DESCRIPTION REV	QUALITY SYMBOLS $\sqrt{F_A}$=0 $\sqrt{F_C}$=0 $\sqrt{F_P}$=0	GENERAL TOLERANCES (UNLESS SPECIFIED) mm / INCH 4 PLACES ± --- / ± --- 3 PLACES ± --- / ± --- 2 PLACES ± --- / ± --- 1 PLACE ± --- / ± --- 0 PLACE ± --- / ± --- ANGULAR ±1/2° DRAFT WHERE APPLICABLE MUST REMAIN WITHIN DIMENSIONS	DIMENSION STYLE MM ONLY DRAWN BY CCARRANZA DATE 2012/10/26 CHECKED BY CCARRANZA DATE 2012/11/06 APPROVED BY DMCGOWAN DATE 2012/11/06 MATERIAL NO. 1807200001 SIZE B	SCALE 2:1 DESIGN UNITS METRIC THIRD ANGLE PROJECTION TITLE COB LED HOLDER 23.85MM X 23.85MM SQUARE molex DOCUMENT NO. SD-180720-001 SHEET NO. 2 OF 2	THIS DRAWING CONTAINS INFORMATION THAT IS PROPRIETARY TO MOLEX INCORPORATED AND SHOULD NOT BE USED WITHOUT WRITTEN PERMISSION

tb_frame_B_P_AM_T
Rev. G 2012/01/11