SMD THICK FILM CHIP RESISTORS

勝 特 力 材 料 886-3-5753170
胜特力电子(上海) 86-21-54151736
胜特力电子(深圳) 86-755-83298787
Http://www.100y.com.tw

CONSTRUCTION

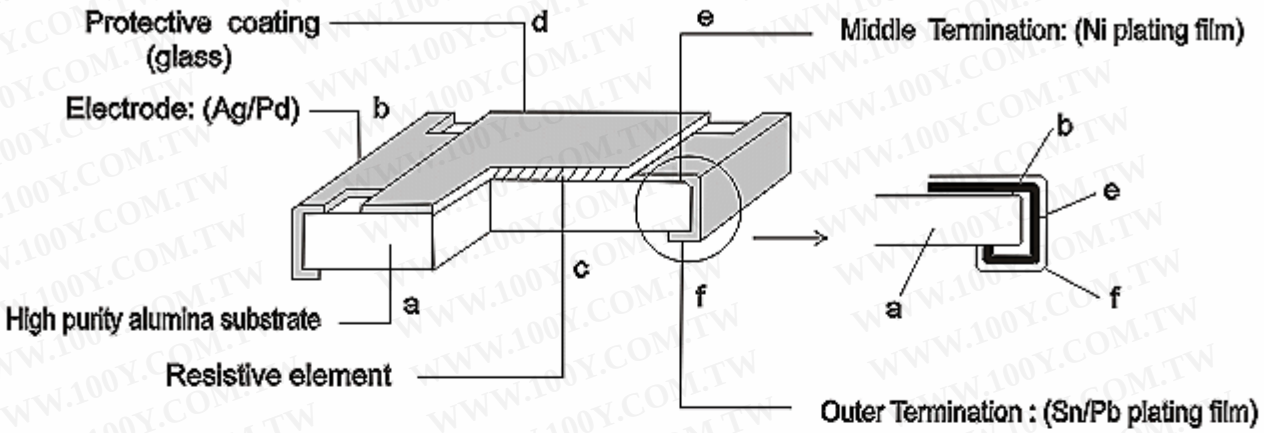

☐ APPLICATION:

Telecommunication equipments. Radio and Tape recorders, TV tuners, Video cameras, Watches, Pocket calculators, Automotive Industry (Indicator), Computers, Instruments, Medical and Military equipments.

☐ FEATURES:

- Small size and light weight
- Reduction of assembly costs and tching with placement machines.
- Reliability, High quality and Fast d very.
- Suitable for both reflow soldering l flow soldering.

DIMENSION

☐ 0402/0603/0805/1206/1210/2010/2512

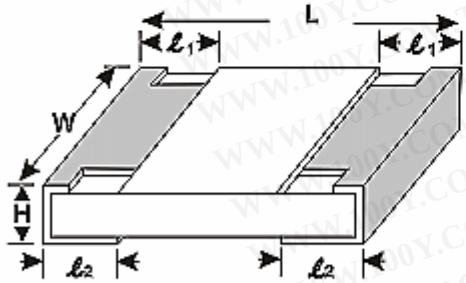

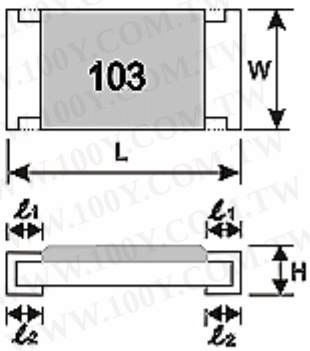

Unit:mm

TYPE	L	W	H	ℓ_1	ℓ_2
0402	1.00 ±0.10	0.50 ±0.05	0.30 ±0.05	0.20 ±0.10	0.20 ±0.10
0603	1.60 ±0.20	0.80 ±0.15	0.40 ±0.10	0.30 ±0.20	0.30 ±0.15
0805	2.00 ±0.20	1.25 ±0.15	0.50 ±0.15	0.35 ±0.15	0.35 ±0.15
1206	3.20 ±0.20	1.60 ±0.20	0.55 ±0.15	0.45 ±0.20	0.45 ±0.20
1210	3.20 ±0.20	2.50 ±0.20	0.55 ±0.15	0.50 ±0.20	0.50 ±0.20
2010	5.00 ±0.20	2.50 ±0.20	0.55 ±0.10	0.60 ±0.20	0.60 ±0.20
2512	6.30 ±0.20	3.20 ±0.20	0.55 ±0.10	0.60 ±0.20	0.60 ±0.20

SMD THICK FILM CHIP RESISTORS

勝 特 力 材 料 886-3-5753170
胜特力电子(上海) 86-21-54151736
胜特力电子(深圳) 86-755-83298787
Http://www.100y.com.tw

RATINGS

TYPE	Rated Power at 70°C	Max Working Voltage	Max Overload Voltage	T.C.R (PPM/°C)	Resistance Range B(±0.1%) D(±0.5%)	F(±1%)	G(±2%)	J(±5%) K(±10%)	Jumper Rated Current	Jumper Resistance Value	Operating Temperature Range
CR02 (0402)	0.0625W	50V	100V	+500~-200			1Ω~9.9Ω	1Ω~9.9Ω	1A	50mΩ Max	-55°C ~ +125°C
				+300~-300		10Ω~990Ω	10Ω~990Ω	10Ω~990Ω			
				+200~-200		1KΩ~1MΩ	1KΩ~1MΩ	1KΩ~1MΩ			
CR03 (0603)	0.1W	50V	100V	+400~-400		1Ω~9.9Ω	1Ω~9.9Ω	1Ω~9.9Ω	1A	50mΩ Max	
				+200~-200			10Ω~1MΩ	10Ω~10MΩ			
				+100~-100	10Ω~1MΩ	10Ω~1MΩ					
CR05 (0805)	0.125W	150V	300V	+400~-400		1Ω~9.9Ω	1Ω~9.9Ω	1Ω~9.9Ω	1A	50mΩ Max	
				+200~-200			10Ω~1MΩ	10Ω~10MΩ			
				+100~-100	10Ω~1MΩ	10Ω~1MΩ					
CR06 (1206)	0.25W	200V	400V	+400~-400		1Ω~9.9Ω	1Ω~9.9Ω	1Ω~9.9Ω	2A	50mΩ Max	
				+200~-200			10Ω~1MΩ	10Ω~10MΩ			
				+100~-100	10Ω~1MΩ	10Ω~1MΩ					
CR12 (1210)	0.333W	200V	400V	+400~-400		1Ω~9.9Ω	1Ω~9.9Ω	1Ω~9.9Ω	2A	50mΩ Max	
				+200~-200			10Ω~1MΩ	10Ω~10MΩ			
				+100~-100	10Ω~1MΩ	10Ω~1MΩ					
CR20 (2010)	0.5W	200V	400V	+400~-400		1Ω~9.9Ω	1Ω~9.9Ω	1Ω~9.9Ω	2A	50mΩ Max	
				+200~-200			10Ω~1MΩ	10Ω~10MΩ			
				+100~-100	10Ω~1MΩ	10Ω~1MΩ					
CR25 (2512)	1W	200V	400V	+400~-400		1Ω~9.9Ω	1Ω~9.9Ω	1Ω~9.9Ω	2A	50mΩ Max	
				+200~-200			10Ω~1MΩ	10Ω~10MΩ			
				+100~-100	10Ω~1MΩ	10Ω~1MΩ					