Bluetooth® Module Class1 BC04-ext Module
(Model: BTM-40C1)

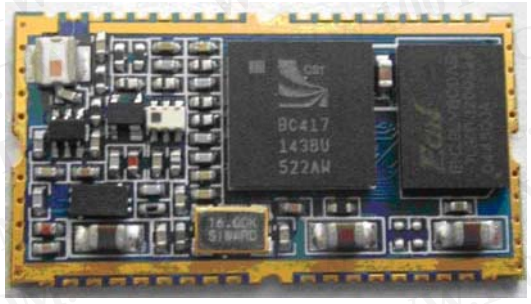

Features:

1. **Bluetooth Ver. 2.0+EDR certification**
2. **Transmit Power up to +18dBm(class1)**
3. **Low current consumption: Hold, Sniff, Park, Deep sleep mode**
4. **3.0V to 3.6V operation**
5. **Full Bluetooth Data rate over UART and USB**
6. **Support up to 7 ACL links and 3 SCO links**
7. **Enhanced Data Rate(EDR) compliant for both 2Mbps and 3Mbps modulation modes**
8. **Interface: USB, UART&PCM(for voice codec)**
9. **SPP firmware with AT commands**
10. **RoHS Compliant**
11. **Small outline: 28.2 X 15.0 X 2.8 mm**

Application:

1. **Access point**
2. **Domestics and Industrial applications**
3. **Serial Adapter**
4. **GPS, POS, Barcode Reader**

勝 特 力 材 料 886-3-5753170
胜特力电子(上海) 86-21-54151736
胜特力电子(深圳) 86-755-83298787
Http://www.100y.com.tw

Block Diagram

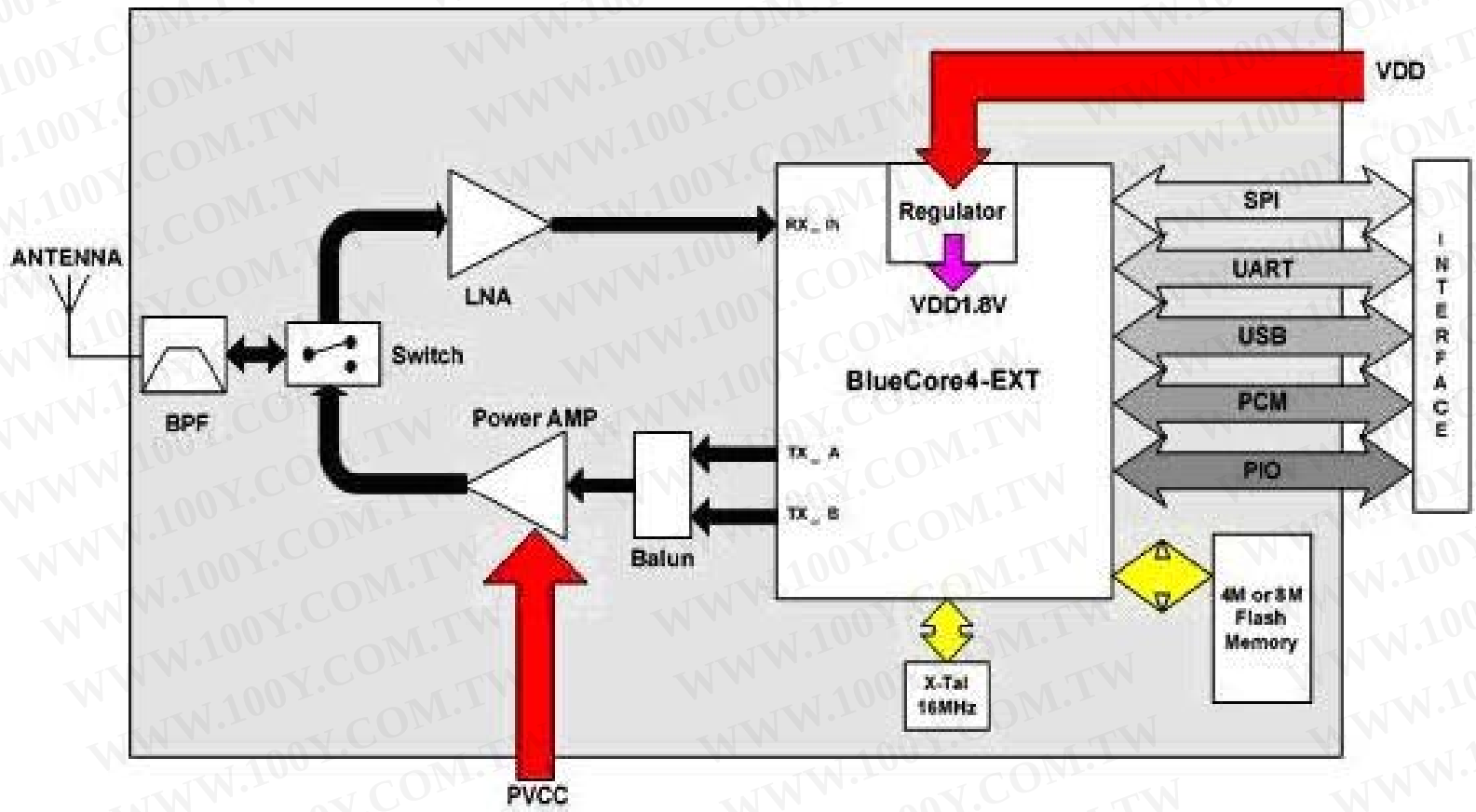

Electrical Characteristics:

Absolute Maximum Ratings			
Parameter	**Min.**	**Max.**	**Unit**
Storage Temperature	**-40**	**+85**	℃
Supply Voltage(VDD)	**2.7**	**3.6**	**DCV**
Supply Voltage(PVCC)	**3.0**	**3.3**	**DCV**
Other Pin Voltage	**Vss-0.4**	**VDD+0.4**	**DCV**
Recommended Operating Conditions			
Parameter	**Min.**	**Max.**	**Unit**
Temperature	**-10**	**+70**	℃

Supply Voltage for UART	3.0	3.6	DCV
Supply Voltage for USB	3.0	3.6	DCV

General Electrical Specification

Parameter	Description	Min.	Typ.	Max.	Unit
Carrier Frequency		2.402		2.480	GHz
RF Output Power	Measured in 50ohm	15	16.5	18	dBm
RX sensitivity		-	-88	-86	dBm
Load Impedance	No abnormal Oscillation			5:1	
Input Low Voltage	RESET,UART,GPIO,PCM	-0.30	-	0.80	DCV
Input High Voltage	RESET,UART,GPIO,PCM	0.7VDD	-	VDD+0.3	DCV
Output Low Voltage	UART,GPIO,PCM	-	-	0.40	DCV
Output High Voltage	UART,GPIO,PCM	VDD-0.4	-	-	DCV
Average Current Consumption	Receive DM1		114		mA

勝 特 力 材 料 886-3-5753170
胜特力电子(上海) 86-21-54151736
胜特力电子(深圳) 86-755-83298787
Http://www.100y.com.tw

Radio Characteristics - Basic Data Rate:

Transmitter , VDD = 3.3V Temperature =+20°C

	Frequency (GHz)	Min.	Typ.	Max.	Bluetooth Specification	Unit
RF transmit power	2.402	15	16.5	18	-6 to +20	dBm
	2.441	15	16.5	18		dBm
	2.480	15	16.5	18		dBm
Initial carrier frequency tolerance	2.402	-	12	25	±75	kHz
	2.441	-	10	25		kHz
	2.480	-	9	25		kHz
-20dB bandwidth for modulated carrier	2.402	-	890	1000	≤ 1000	kHz
	2.441	-	870	1000		kHz
	2.480	-	820	1000		kHz
Carrier Frequency Drift (single slot packet DH1)	2.402	-	±10	±20	≤25	kHz
	2.441	-	±10	±20		kHz
	2.480	-	±10	±20		kHz
Carrier Frequency Drift (five slot packet DH5)	2.402	-	±10	±20	≤40	kHz
	2.441	-	±10	±20		kHz
	2.480	-	±10	±20		kHz
Drift Rate	2.402	-	±7	±14	≤20	kHz/50µs
	2.441	-	±7	±14		kHz/50µs
	2.480	-	±7	±14		kHz/50µs
RF power control range		16	25	-	≥16	dB
$\triangle f1^{avg}$ "Maximum Modulation"	2.402	145	165	170	140<$\triangle f1^{avg}$<175	kHz
	2.441	145	165	170		kHz
	2.480	145	165	170		kHz
$\triangle f2^{maz}$ "Minimum Modulation"	2.402	115	150	-	>115	kHz
	2.441	115	150	-		kHz
	2.480	115	150	-		kHz
Adjacent channel transmit power $F=F_0\pm2MHz$		-	-35	-20	≤ · 20	dBm
Adjacent channel transmit power $F=F_0\pm3MHz$		-	-45	-40	≤ · 40	dBm
Adjacent channel transmit power $F>F_0+3MHz$		-	-50	-40	≤ · 40	dBm
Adjacent channel transmit power $F<F_0-3MHz$		-	-50	-40	≤ · 40	dBm

Receiver , VDD = 3.3V Temperature =+20°C

	Frequency (GHz)	Min.	Typ.	Max.	Bluetooth Specification	Unit
Sensitivity at 0.1% BER (Single slot packets)	2.402	-	-88	-86	≤ - 70	dBm
	2.441	-	-88	-86		dBm
	2.480	-	-88	-86		dBm
Sensitivity at 0.1% BER (Multi slot packets)	2.402	-	-88	-86	≤ - 70	dBm
	2.441	-	-88	-86		dBm
	2.480	-	-88	-86		dBm
Maximum received signal level at 0.1% BER	2.402	-20	-10	-	≥ - 20	dBm
	2.441	-20	-10	-		dBm
	2.480	-20	-10	-		dBm
C/I co-channel		-	6	11	≤ 11	dB
Adjacent channel selectivity C/I $F=F_0+1$ MHz		-	-4	-	≤ 0	dB
Adjacent channel selectivity C/I $F=F_0-1$MHz		-	-4	-	≤ 0	dB

Adjacent channel selectivity C/I F=F_0 +2 MHz	-	-38	-	≤ -30	dB
Adjacent channel selectivity C/I F=F_0 - 2MHz	-	-23	-	≤ -20	dB
Adjacent channel selectivity C/I F>=F_0 +3 MHz	-	-45	-	≤ -40	dB
Adjacent channel selectivity C/I F<=F_0 -5 MHz	-	-44	-	≤ -40	dB
Adjacent channel selectivity C/I F=F_{image}	-	-22	-	≤ -9	dB
F_0 = 2441 MHz					
Maximum level of intermodulation interference		-30		≥ -39	dBm

勝 特 力 材 料 886-3-5753170
胜特力电子(上海) 86-21-54151736
胜特力电子(深圳) 86-755-83298787
Http://www.100y.com.tw

Radio Characteristics – Enhanced Data Rate:

Transmitter , VDD = 3.3V Temperature =+20°C

	Frequency (GHz)	Min.	Typ.	Max.	Bluetooth Specification	Unit
Maximum RF transmit power(note)	2.402	-	6	-	-6 to +20	dBm
	2.441	-	6	-		dBm
	2.480	-	7	-		dBm
Relative transmit power		-	-1.6	-	-4 to +1	dB
π/4 DQPSK Maximum carrier frequency stability w_0		-	2	-	≤ ±10 for all blocks	kHz
π/4 DQPSK Maximum carrier frequency stability w_i		-	6	-	≤ ±75 for all packets	kHz
π/4 DQPSK Maximum carrier frequency stability | w_0 + w_i |		-	8	-	≤ ±75 for all blocks	kHz
8 DPSK Maximum carrier frequency stability w_0		-	2	-	≤ ±10 for all blocks	kHz
8 DPSK Maximum carrier frequency stability w_i		-	6	-	≤ ±75 for all packets	kHz
8 DPSK Maximum carrier frequency stability | w_0 + w_i |		-	8	-	≤ ±75 for all blocks	kHz
π/4 DQPSK Modulation Accuracy	RMS DVEM	-	7	-	≤ 20	%
	99% DEVM	-	13	-	≤ 30	%
	Peak DEVM	-	19	-	≤ 35	%
8 DPSK Modulation Accuracy	RMS DVEM	-	7	-	≤ 13	%
	99% DEVM	-	13	-	≤ 20	%
	Peak DEVM	-	17	-	≤ 25	%
In-band spurious emissions	F>F_0 +3 MHz	-	<-50	-	≤ -40	dBm
	F<F_0 -3 MHz	-	<-50	-	≤ -40	dBm
	F=F_0 -3 MHz	-	-46	-	≤ -40	dBm
	F=F_0 -2 MHz	-	-34	-	≤ -20	dBm
	F=F_0 -1 MHz	-	-35	-	≤ -26	dBm
	F=F_0 +1 MHz	-	-35	-	≤ -26	dBm
	F=F_0 +2 MHz	-	-31	-	≤ -20	dBm
	F=F_0 +3 MHz	-	-33	-	≤ -40	dBm
EDR Differential Phase Encoding			No Errors		≥99	%

Receiver , VDD = 3.3V Temperature =+20°C

	Modulation	Min.	Typ.	Max.	Bluetooth Specification	Unit
Sensitivity at 0.1% BER	π/4 DQPSK	-	-87	-	≤ -70	dBm
	8 DPSK	-	-78	-	≤ -70	dBm
Maximum received signal level at 0.1% BER	π/4 DQPSK	-	-8	-	≥ -20	dBm
	8 DPSK	-	-10	-	≥ -20	dBm
C/I co-channel at 0.1% BER	π/4 DQPSK	-	10	-	≤ +13	dB
	8 DPSK	-	19	-	≤ +21	dB
Adjacent channel selectivity C/I F=F_0 +1 MHz	π/4 DQPSK	-	-10	-	≤ 0	dB
	8 DPSK	-	-5	-	≤ +5	dB
Adjacent channel selectivity C/I F=F_0 -1 MHz	π/4 DQPSK	-	-11	-	≤ 0	dB
	8 DPSK	-	-5	-	≤ +5	dB
Adjacent channel selectivity C/I F=F_0 +2 MHz	π/4 DQPSK	-	-40	-	≤ -30	dB
	8 DPSK	-	-40	-	≤ -25	dB
Adjacent channel selectivity C/I F=F_0 -2 MHz	π/4 DQPSK	-	-23	-	≤ -20	dB
	8 DPSK	-	-20	-	≤ -13	dB
Adjacent channel selectivity C/I F=F_0 +3 MHz	π/4 DQPSK	-	-45	-	≤ -40	dB
	8 DPSK	-	-45	-	≤ -33	dB

Adjacent channel selectivity C/I F=F_0 -5 MHz	π/4 DQPSK	-	-45	-	≤ -40	dB
	8 DPSK	-	-45	-	≤ -33	dB
F_0 = 2405, 2441, 2477 MHz						
Adjacent channel selectivity C/I F=F_{image}	π/4 DQPSK		-20		≤ -7	dB
	8 DPSK		-15		≤ 0	dB

Note :

Measurement made using a POWER_TABLE entery of TX_PRE 80, INT PA63, EXT PA255. This ensures that the Bluetooth requirements for ACP and those defined by the FCC and ETSI are satisfied over the operating temperature rang of -5℃ to +45℃. Although the design is capable of generating in excess of +18dBm, regulatory compliance over the full temperature range of -5℃ to +45℃ will not be satisfied if the transmit power approaches this value.

勝 特 力 材 料 886-3-5753170
胜特力电子(上海) 86-21-54151736
胜特力电子(深圳) 86-755-83298787
Http://www.100y.com.tw

SPP AT Command sets

+++ (Escape Sequence)	When the device is in Data mode, it can be forced back into Command mode while maintaining the connection to the remote device. The sequence characters should be with 1000ms guard time	
A (Establish a connection)	This command is used to establish a connection in manual master role.	
	Modifiers	*Description*
	A	Connect to a device which has been assigned by "ATD= xxxxxxxxxxxx"
	A1~A8	Connect to a device1~8 in neighborhood found through "ATF?".
B (Display local BD address)	This command display the local device BD address	
	Modifiers	*Description*
	B?	Inquire the Local BD address
C (Flow Control)	This command enable or disable flow control signals (CTS/RTS) of the COM port. Note, the setting is not affected by ATZ0 but will cause a reboot	
	Modifiers	*Description*
	C0	Disable flow control.
	C1 (Default)	Enable flow control.
	C?	Inquire the current setting
D (Set Remote BD address)	For security purpose, We can specifies the unique remote device can be connected. In master role, it automatically inquire and search the slave even the slave is undiscoverable. In slave role, the command should be as a filter condition to accept the master's inquiry.	
	Modifiers	*Description*
	D=xxxxxxxx	"xxxxxxxx" is a string of 12 hexadecimal digits.
	D0 (Default)	Clear Remote BD address setting, inquire any slave in master mode or accept any master in slave mode.
	D?	Inquire the Remote BD address setting
E (Local Echo)	This command specifies whether the device should echo characters received from the UART back to the Host	
	Modifiers	*Description*
	E0	Characters received from the UART are not echoed back to the Host
	E1 (Default)	Characters received from the UART are echoed back to the Host.
	E?	Inquire the current setting
F (Find Bluetooth device)	This command is used to find any bluetooth device in neighborhood within 60 seconds timeout. If any device is found, its name and address will be listed. The search ends with a message "Inquiry ends, xx device(s) found." This command is available only when the adaptor is in the master role.	
	Modifiers	*Description*
	F?	Inquire scan Bluetooth neighborhood devices.
H (Discoverable	This command is used to drop connection either master or slave role. And it is used to specifiy whether the device could be discovered by remote master device. note : it will cause a reboot when ATH0 or ATH1 take the effect	

	Modifiers	*Description*
	H	Drop current connection in Online command mode
	H0	The device enters undiscoverable mode. If a pair have been made, the original connection could be connected again. Other remote master device can not discovery this device.
	H1 (Default)	The device enters discoverable mode.
	H?	Inquire the current setting
I (Information)	This command is used to Inquiry the information	
	Modifiers	*Description*
	I0	Inquire the version Codes
	I1	Listing all setting value
	I2	Inquire RSSI in Online command mode
K (Stop bits setting)	This command is used to specify one or two stop bits of COM port	
	Modifiers	*Description*
	K0 (Default)	One Stop bit
	K1	Two stop bits
	K?	Inquire the current setting
L (Baud Rate Control)	This command is used to specify the baud rate of COM port	
	Modifiers	*Description*
	L0	4800bps
	L1	9600bps
	L2 (Default)	19200bps
	L3	38400bps
	L4	57600bps
	L5	115200bps
	L6	230.4Kbps
	L7	460.8Kbps
	L8	921.6Kbps
	L?	Inquire the current setting
M (Parity bits setting)	This command is used to specify the parity bit setting of COM port	
	Modifiers	*Description*
	M0 (Default)	None Parity bit.
	M1	Odd parity setting.
	M2	Even parity setting
	M?	Inquire the current setting
N (Set device name)	We can specifies the device a friendly name using 0 to 9, A to Z, a to z, space and –, which are all valid characters. Note that "firs space or -, last space or – isn't permitted". The default name is "Serial Adaptor"	
	Modifiers	*Description*
	N=xxxxx	"xxxxx" is a character string, maxima length is 16
	N?	Inquire the device name
O (Auto connect setting)	This command is used to enable/disable auto-connection feature in master role. By the way, it i used to online switch from command mode to data mode. Note, it will cause a reboot when ATO0 or ATO1 take effect.	
	Modifiers	*Description*
	O	Online switch from command mode to data mode
	O0 (Default)	Automatically connectting to a device which is assigned in "ATD" or any available device if "ATD" was not assigned.
	O1	Disable auto-connection feature, user should manually use "ATA"
	O?	Inquire the current setting

勝 特 力 材 料 886-3-5753170
胜特力电子(上海) 86-21-54151736
胜特力电子(深圳) 86-755-83298787
Http://www.100y.com.tw

P (Set PIN code)	This command specifies the PIN number. It control to off the PIN code authorization that allow to establish a connection without PIN code. Default PIN number is "1234"	
	Modifiers	*Description*
	P=xxxx (Default)	"xxxx" is 4~8 digit string
	P0	Turn off the PIN code authorization
	P?	Inquire the current PIN number
Q (Result Code Supression)	The command is used to determine if result Codes should be sent to the Host. When result Codes are supressed, the device does not generate any characters in response to the completion of a command or when an event occurs. Four Result Codes : OK,CONNECT,DISCONNECT,ERROR	
	Modifiers	*Description*
	Q0 (Default)	The device will prompt Result Codes
	Q1	The device will not prompt Result Codes
	Q?	Inquire the current setting
R (Set Role)	This command specifies whether the device could be master or slave device. If change the role the adaptor will reboot and clear all paired addresses.	
	Modifiers	*Description*
	R0	The device as master role.
	R1 (Default)	The device as slave role.
	R?	Inquire the current setting
Z (Restore)	This command is used to restore default setting and reboot	
	Modifiers	*Description*
	Z0	Restore the default setting

The factory settings of UART are as follows:

1. Baud rate: 19200 bps
2. Data bit: 8
3. Parity: none
4. Stop bit: 1
5. Flow control: H/W or none

勝 特 力 材 料 886-3-5753170
胜特力电子(上海) 86-21-54151736
胜特力电子(深圳) 86-755-83298787
Http://www.100y.com.tw

BTM-40C1 Pin Function

Pin No.	Pin Name	Pin Type	Description
1	GND	GND	Common ground
2	PVCC	Power	Power Amp. Power Supply(3.3V)
3	AIO(0)	Bi-directional	Programmable I/O terminal , **32KHz sleep clock input**
4	AIO(1)	Bi-directional	Programmable I/O terminal
5	PIO(0)	Bi-directional	Programmable I/O terminal, RX Enable
6	PIO(1)	Bi-directional	Programmable I/O terminal, TX Enable
7	PIO(2)	Bi-directional	Programmable I/O terminal
8	PIO(3)	Bi-directional	Programmable I/O terminal
9	PIO(4)	Bi-directional	Programmable I/O terminal, (Button Input, active high)
10	GND	GND	Common ground
11	PIO(5)	Bi-directional	Programmable I/O terminal
12	PIO(6)	Bi-directional	Programmable I/O terminal, (connection status indication, active high)
13	PIO(7)	Bi-directional	Programmable I/O terminal, (Drive Link status led, active low).
14	PIO(8)	Bi-directional	Programmable I/O terminal
15	PIO(9)	Bi-directional	Programmable I/O terminal
16	RESETB	CMOS input	Reset input of module, Active low reset
17	VCC	Power	Module power supply input
18	GND	GND	Common ground
19	GND	GND	Common ground
20	USB_DP	Bi-directional	USB data plus
21	USB_DN	Bi-directional	USB data minus
22	PCM_SYNC	Bi-directional	Synchronous data sync
23	PCM_IN	CMOS input	Synchronous data input

24	**PCM_OUT**	**CMOS output**	Synchronous data output
25	**PCM_CLK**	**Bi-directional**	Synchronous data clock
26	**UART_RX**	**CMOS input**	UART data input
27	**UART_TX**	**CMOS output**	UART data output
28	**UART_RTS**	**CMOS output**	UART request to send(active low)
29	**GND**	**GND**	Common ground
30	**UART_CTS**	**CMOS input**	UART clear to send(active low)
31	**SPI_MOSI**	**CMOS input**	Serial Peripheral Interface data input
32	**SPI_CSB**	**CMOS input**	Chip select for Synchronous Serial Interface(active low)
33	**SPI_CLK**	**CMOS input**	Serial Peripheral Interface clock
34	**SPI_MISO**	**CMOS output**	Serial Peripheral Interface data output
35	**PIO(11)**	**Bi-directional**	Programmable I/O terminal
36	**PIO(10)**	**Bi-directional**	Programmable I/O terminal
37	**RF_IO**	**Analogue**	Antenna interface
38	**GND**	**GND**	Common ground

BTM-40C1 Dimension

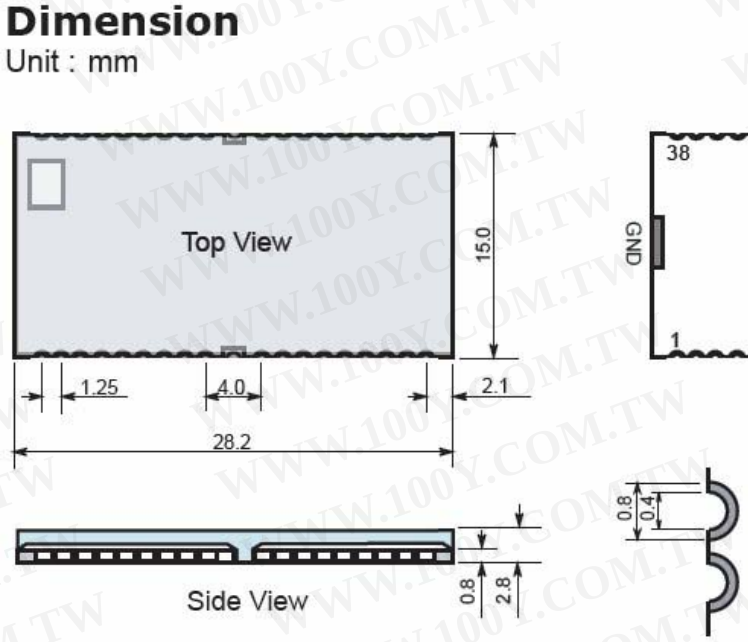

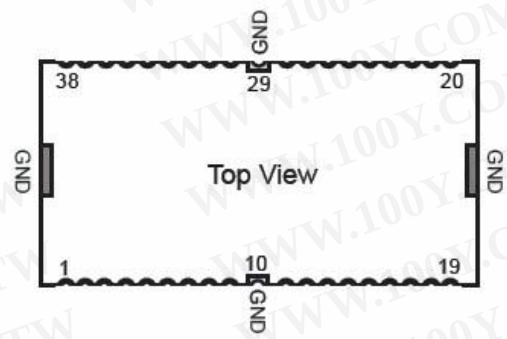

勝 特 力 材 料 886-3-5753170
胜特力电子(上海) 86-21-54151736
胜特力电子(深圳) 86-755-83298787
Http://www.100y.com.tw

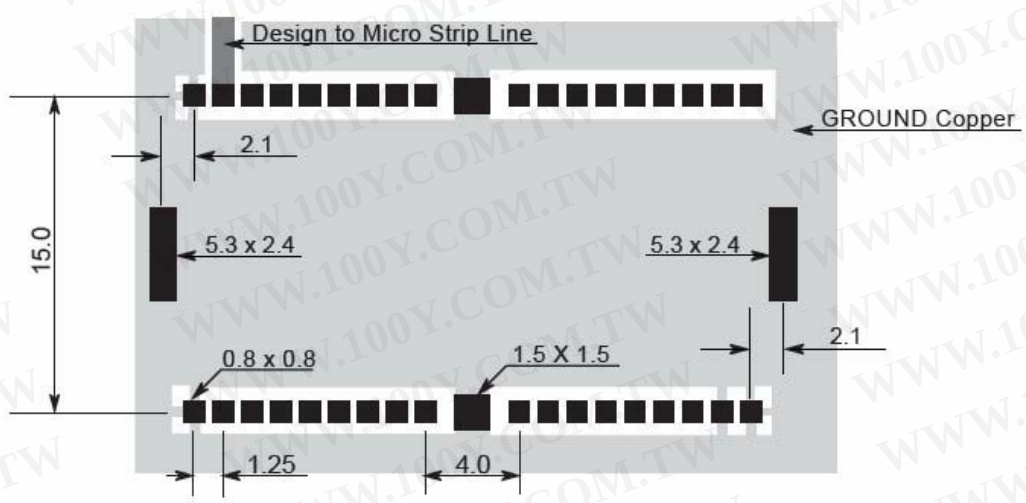

PCB Layout (Top View)