Alle Rechte vorbehalten/ All rights reserved

勝 特 力 材 料 886-3-5753170
胜特力电子(上海) 86-21-34970699
胜特力电子(深圳) 86-755-83298787
Http://www.100y.com.tw

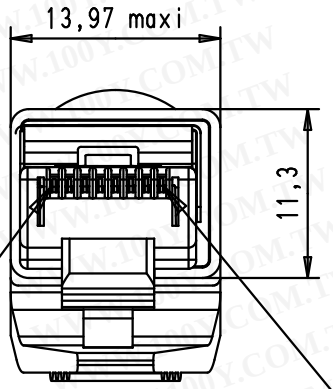

contact n° 8

contact n° 1

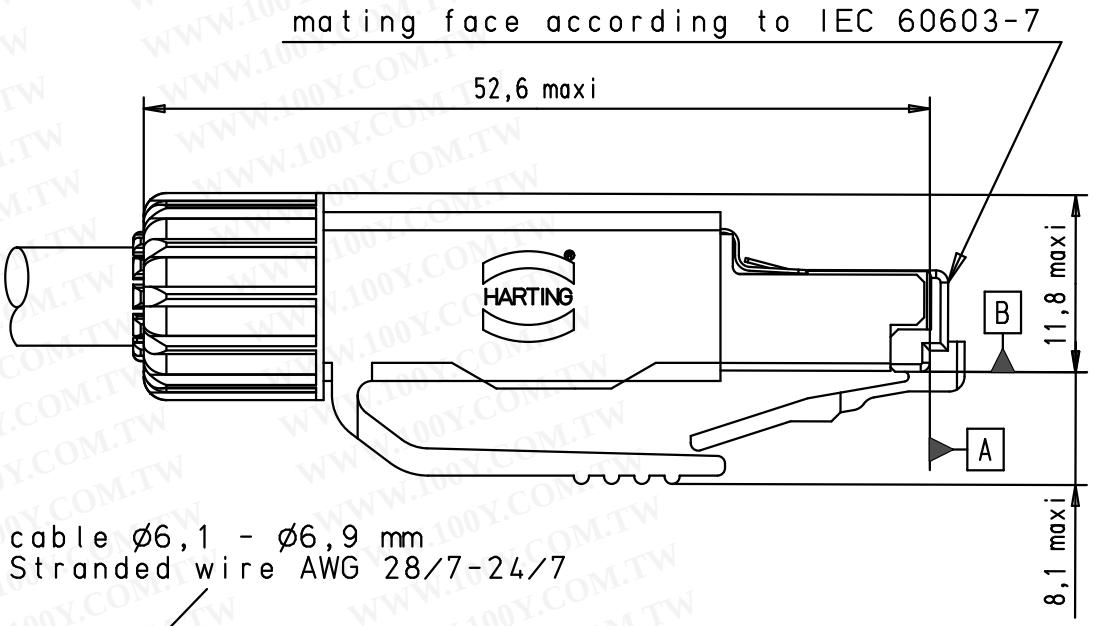

cable Ø6,1 - Ø6,9 mm
Stranded wire AWG 28/7-24/7

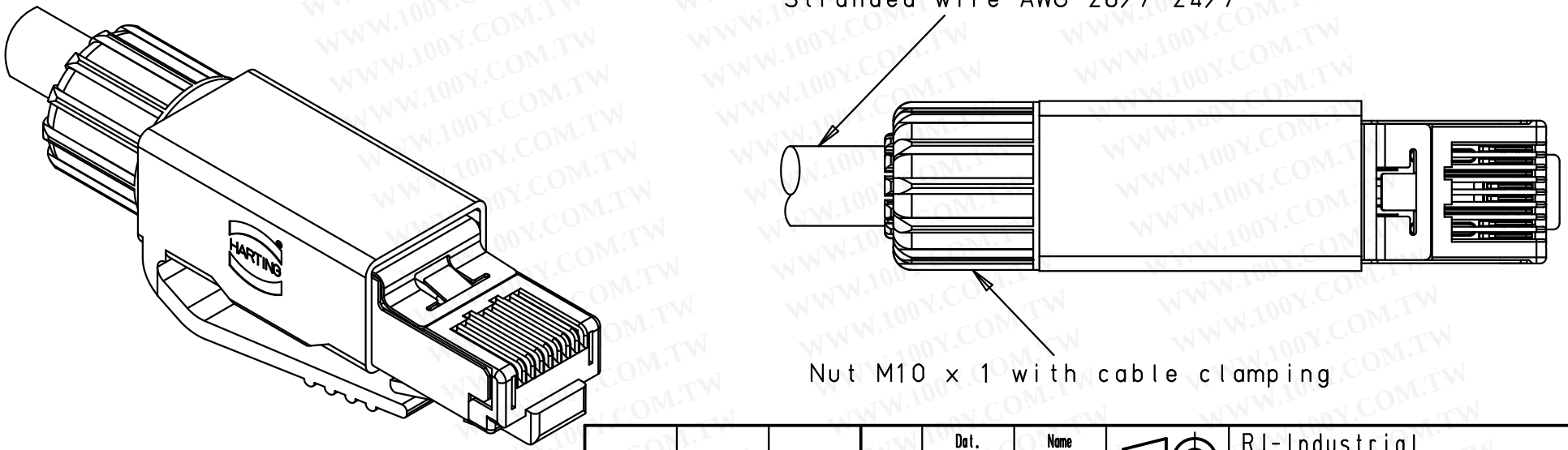

Nut M10 x 1 with cable clamping

Data contact plating: Au 1,27 um over nickel

09 45 151 15 10	Data connector with Blue wires manager
09 45 151 15 00	Data connector with White wires manager

				Dat.	Name
			Detail.	17/05/04	A. Fakhri
			Insp.	16-05-11	JMDV
			Stand.		
EC02093	16-05-11	SD			
31904	17/05/04	AF			
Mod.	Dat.	Name			

All Dim. in mm
Orig. Size DIN A 4

HARTING E.U.R.L
F-95972 Paris

RJ-Industrial
IP20 Data Plug
Thermoplastic shielded
with 8 data contacts

TB 09 45 151 15x0

Sub.

Maßstab/ Scale: 2:1

Blatt/ Page: 1/1