REF. NO. **17-0245**

PROPOSED SPECIFICATIONS FOR APPROVAL

CUSTOMER Singway Corporation

PART NAME DC FAN MOTOR

MODEL 04020VA-12P-BA-02

DATE	2017/3/28	
COVER	1	Page
SPECIFICATIONS	3	Pages
ATTACHED SHEET	0	Pages
TOTAL	4	Pages

SIGNATURE

勝 特 力 材 料 886-3-5753170
胜特力电子(上海) 86-21-34970699
胜特力电子(深圳) 86-755-83298787
Http://www.100y.com.tw

2017/4/6

PLEASE RETURN 1 COPY OF THIS PROPOSED DRAWING WITH YOUR SIGNATURE.

For your use in safety

Carefully read the precautions before use and use the motor properly and safely.
In "For your use in safety", the rank of safety precautions are being divided into "warning" and "cautions".
warning : Due to mishandling, a dangerous condition might occur and there is a possibility of death or serious injury.
Precautions : Due to mishandling, a dangerous condition might occur and ther is possibility of medium human disorder or material disorder. There might be cases where there are heavy damages.

Warning

- Do not use in an explosive atmosphere, flammable atmosphere and locations where water falls onto. It might cause a fire, injury or electric shock.
- Installation, wiring connection, inspection,etc. Should be done by a person with professional knowledge. You might get an electric shock or be injured.
- Do not move, wire or inspect the motor when applying current. You might get an electric shock or be injured. After turning switch off, kindly proceed your operations ensuring safety.
- Do not pull out or push in the lead wire when applying current. You might get an electric shock. And do not touch the connection terminals, etc. when applying current. You will get an electric shock.

Precautions

- Whenever the motor is used in any equipment that holds large social and public effects, kindly consider the measures for equipment protection at equipment side once the motor stops rotation.
- As you may get injured, do not put your fingers into the motor while rotation.
- Static electricity causes motor and equipment failures. Take appropriate measures against static electricity during installation of motor.
- Do not hold the lead wire part. Might cause the motor to drop off.
- For your use, strictly follow rated operating voltage additionally frequency, in particular, AC motors as well as environment in use, such as temperature, humidity range.

MinebeaMitsumi Inc.

APD. BY	CHC. BY	DET. BY
Eikouchi	T.Oguma	Miyazawa

項目 (Items)		諸元 (Description)
モーターの種類 (Motor Type)		DCブラシレスモーター (DC Brushless Motor)
定格 (Rating)		
定格時間 (Duty)		連続 (Continuous)
定格電圧 (Rating Voltage) [V]		12
使用電圧範囲 (Operating Voltage) [V]		7.0～13.2
起動電圧 (Starting Voltage) [V]		7.0
定格回転速度 ☆3☆4	標準値 (Average)	9500
(Speed) [min^{-1}]	最小値 (Minimum)	8550
最大風量 ☆1☆4	標準値 (Average)	0.32
(Max Air Flow) [m^3/min]	最小値 (Minimum)	0.29
最大静圧 ☆2☆4	標準値 (Average)	99.3
(Max Static Pressure) [Pa]	最小値 (Minimum)	80.0
定格電流 ☆3☆4	標準値 (Average)	0.13
(Current) [A]	最大値 (Maximum)	0.17
定格入力 ☆3☆4	標準値 (Average)	1.56
(Input Power) [W]	最大値 (Maximum)	2.04
騒音 (Acoustical Noise) [dB] ☆3☆4		34.6

＊ 測定条件 (Measuring Conditions)

1. 無響音室内で、かつ障害物のない大気中において測定する。
   (Measurement with in anechoic test chamber under free air condition.)
2. 測定機は、モーターの吸込側より1mの距離に位置する。
   (Microphone is placed at a distance of 1m on the axis of air intake side.)
3. 暗騒音は16dB以下のこと。
   (Chamber back ground noise max 16dB.)
4. 騒音は標準回転速度時。
   (Acoustical noise at average speed.)

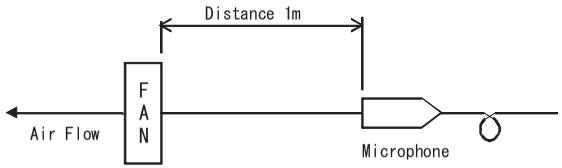

特性曲線 (Performance Curves)

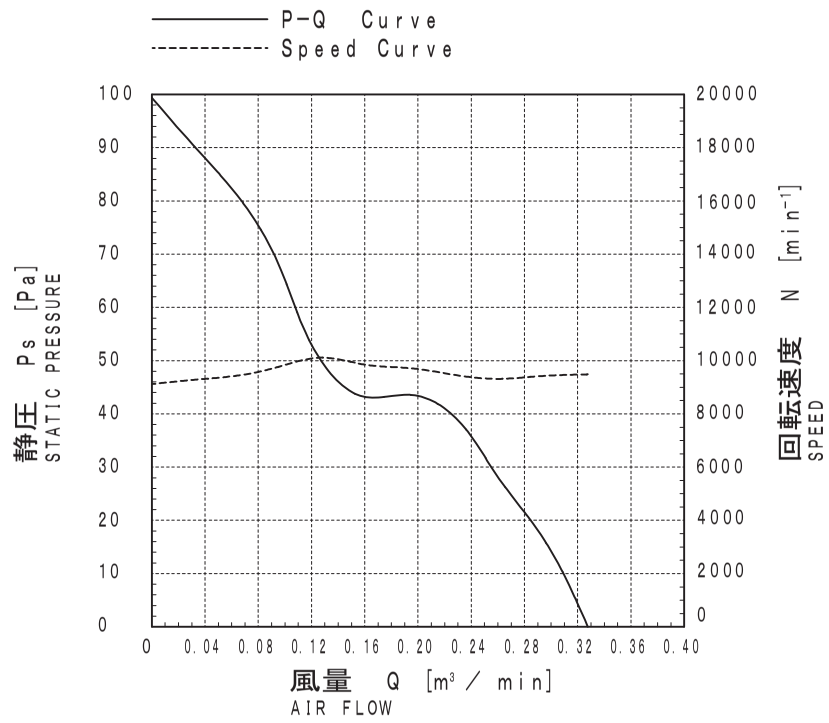

＊ NOTE

☆1 静圧"0"の時 (At 0 static pressure)
☆2 風量"0"の時 (At 0 air flow)
☆3 フリーエアー時 (At free air)
☆4 室温25℃において定格電圧印加時 (At rating voltage, at 25℃)

Confidential
MinebeaMitsumi Inc.
'17.03.30
KZW ISSUED
Airmover

符号 MARK	日付 DATE	変更事由 REASON	ECN NO.	担当 ENGINEER	承認 APPROVED
	・・				
	・・				
	・・				
	・・				
	・・				
	・・				

NMB
MinebeaMitsumi Inc.

APPROVED	CHECKED	DRAWN
KWI	YSHR	ISK

単位 UNIT mm
尺度 SCALE

一般公差 TOL 寸法L	公差
L≦4	±0.1
4＜L≦16	±0.2
16＜L≦63	±0.3
63＜L≦250	±0.5
250＜L≦1000	±0.8
角度DEG	±0.5

材質 MATERIAL
表面粗さ SURF. ROUGH.
熱処理 HEAT TREAT
表面処理 FINISH

作成日 DATE 2013 / 10 / 03
品名 DESCRIPTION AUTO RESTART TYPE DC BRUSHLESS FAN
品番 PART NO. (MODEL NO.) 04020VA-12P-BA-02
葉番 SHEET 1/3
図番 DRAWING NO. 04020VA-12P-BA-02
改訂 REV. B

項目 (Items)	諸元 (Description)
規格 (Standard)	
絶縁抵抗 (Insulation Resistance)	DC 500V メガーにて10MΩ以上 (min 10MΩ by DC 500V Megger) フレームとリード線間 (Between Frame and (+) Terminal)
絶縁耐圧 (Dielectric Withstand Voltage)	AC 700V 1s ☆5 フレームとリード線間 (Between Frame and (+) Terminal)
期待できる寿命 (故障率10%) (Life Expectation (L10 Life))	25℃にて80,000時間 (80,000h at 25℃) 寿命とは、定格電圧印加時の電流値及び回転速度の どちらかが、以下の様になった状態とする。 電流値 : 初期値 +15%以上 回転速度 : 初期値 -15%以下 (The motor life is decided as follows Current : more than +15% of initial value Speed : less than -15% of initial value)
許容環境温度範囲 (Allowable Ambient Temperature)	-10℃～+70℃ (Operating) -10℃～+70℃ (Storage) ☆6 実用上さしつかえない状態で結露無きこと。 (No dew formation at operating and storage condition)
質量 (Mass)	40 g
保護方式 (Protection)	自動復帰方法 (Auto Restart) 逆接続防止 (Polarity Protection) ☆7
耐振動 (JIS C 60068-2-6 に準拠) (Vibration Test)	全振幅 (Peak-to-Peak value of a vibration) : 1.5mm 周波数 (Frequency) : 10～55Hz X, Y, Z 3方向各1時間 (1h in 3 Directions, "X, Y, Z" Each)
耐衝撃 (JIS C 60068-2-27 に準拠) (Shock Test)	加速度 (Acceleration of Gravity) : 1000m/s^2 作用時間 (Time) : 6ms X, Y, Z 3方向各1回 (1 time in 3 Directions, "X, Y, Z" Each)
絶縁階級 (Insulation Class)	E種 (UL : Class A)
回転方向 (Rotation)	銘板側から見て時計方向 (CW Viewed From Name Plate Side)
風吹き出し方向 (Air Flow Direction)	銘板側 (Air Out Over the Struts)
cULus File No.	E89936
VDE File No.	1507300
生産国 (Producing Country)	JAPAN, CHINA

＊NOTE

☆5 AC 500V、1分を保証 (Guarantee AC 500V 1min)

☆6 但し100時間保存の24時間常温放置にて実用上問題無きこと。
(To be free of defects on practical use after 100 hours of stored at -40℃～+70℃ and 24 hours to ambient humidity.)

☆7 使用電圧範囲内において(+)線および、(-)線を逆接続されても異常なきこと。
(Motor withstands reverse connection for positive and negative leads.)

*特記事項(Additional Notice)

(1) 本仕様書に記載されていない項目で特に決める必要のある項目は事前に御連絡ください。
Any modification to these specifications requested by customer shall be negotiated between the manufacturer and the customer.

(2) 当仕様書満足範囲において性能向上の為、部品等一部変更する場合が有ります。
The manufacturer reserves the right to change design, parts or manufacturing processes in order to improve the performance of the fan motor.

(3) 保管はできるだけ6ヶ月以内とし、高温多湿の場所は避けてください。
Storage area should not be in high temperature, high humidity environment, and storage term shall be within 6 months as much as possible.

(4) 定格電圧において72時間拘束されても焼損しません。
In case of locked rotor condition, the current shutdown feature of the fan motor protects the motor for 72 hours at the rated voltage.

(5) 納入品単体の故障により誘発される損害はご容赦いただきます。
We shall be free from compensation for any damage induced due to failure of fan motor.

(6) リード線半田付け部に信越化学工業㈱のシリコーンKE45Bを塗布する。
Shall be apply to soldering lead wire part by Silicone "KE45B"(Shin-Etsu Chemical Co., Ltd.).

(7) 本製品は、極めて高度の信頼性を要する用途(医療装置等、多大な人的・物的損害を及ぼす恐れのある用途)に対応する仕様にはなっておりません。
そのような場合には、予め弊社営業窓口までご相談下さい。
All these products do not have specifications that can handle applications that require extremely high levels of reliability, such as medical equipment or other applications whose failure can be reasonably expected to result in serious physical and/or material damage.
Consult with your NMB/Minebea representative nearest you before using any NMB/Minebea products described or contained herein in such applications.

Confidential
MinebeaMitsumi Inc.
'17.03.30
KZW ISSUED
Airmover

符号 MARK	日付 DATE	変更事由 REASON	ECN NO.	担当 ENGINEER	承認 APPROVED
	・・				
	・・				
	・・				
	・・				
	・・				
	・・				

NMB
MinebeaMitsumi Inc.

APPROVED	CHECKED	DRAWN
KWI	YSHR	ISK

一般公差 TOL 寸法L	公差
L≦4	±0.1
4＜L≦16	±0.2
16＜L≦63	±0.3
63＜L≦250	±0.5
250＜L≦1000	±0.8
角度DEG	±0.5

単位 UNIT mm
尺度 SCALE
材質 MATERIAL
表面粗さ SURF. ROUGH.
熱処理 HEAT TREAT
表面処理 FINISH

作成日 DATE 2013 / 10 / 03
品名 DESCRIPTION AUTO RESTART TYPE DC BRUSHLESS FAN
品番 PART NO. (MODEL NO.) 04020VA-12P-BA-02
葉番 SHEET 2/3
図番 DRAWING NO. 04020VA-12P-BA-02
改訂 REV. B

銘板表示 (Name Plate)

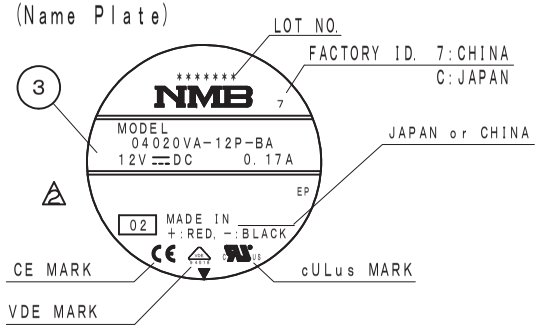

部品構成表 (Parts List)

品番 (Item No.)	品名 (Description)	材質 (Material)	個数 (QTY)	備考 (Remarks)
1	ケーシング (Casing)	プラスチック Plastic Black UL 94V-0	1	
2	インペラー (Impeller)	プラスチック Plastic Black UL 94V-0	1	
3	銘板 (Name Plate)		1	
4	リード線 (Lead Wire)	UL10368 AWG26	1	赤(+) (Red) Pin No. 2
5	リード線 (Lead Wire)	UL10368 AWG26	1	黒(-) (Black) Pin No. 1
6	コネクターハウジング (Connector Housing)	A2501H02-2P or XHP-2	1	JWT or JST
7	コンタクト (Contact)	A2501T0P-2 or SXH-002T-P0.6	2	JWT or JST
8	熱収縮チューブ (Heat shrink tube)	SUMITUBE F2(Z) φ3.0 Black	1	
	軸受 (Bearing)	ボールベアリング (Ball Bearing)	2	

☆8 熱収縮チューブの傷は可とし、破れ無き事。
Scuffon the heat shrinkage tube is acceptable;unless it is ripped.

外観図 (Outline)

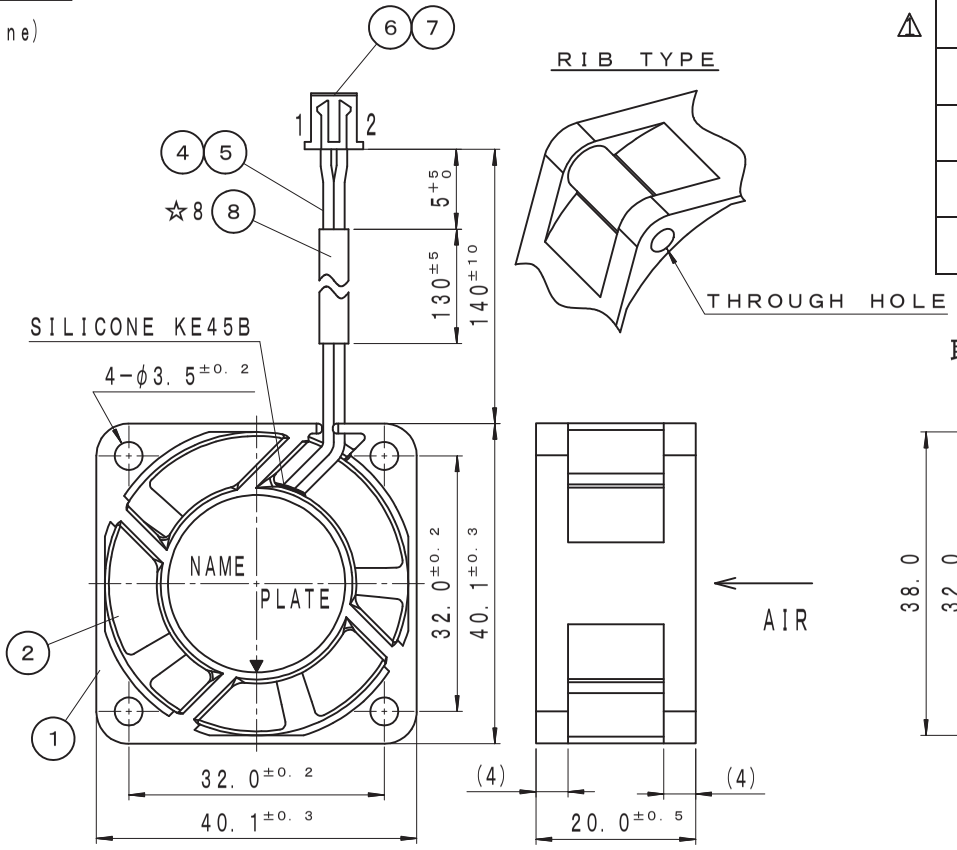

取付穴参考寸法 (Panel Out-line)

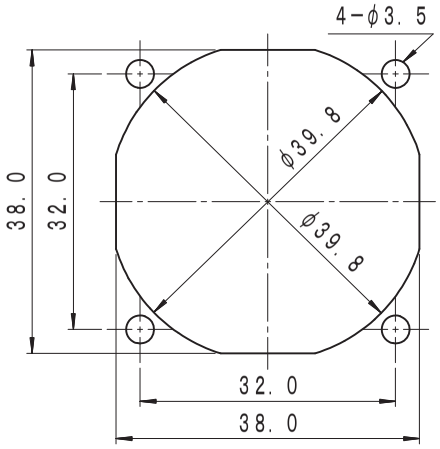

吸入側 (Inlet Side)

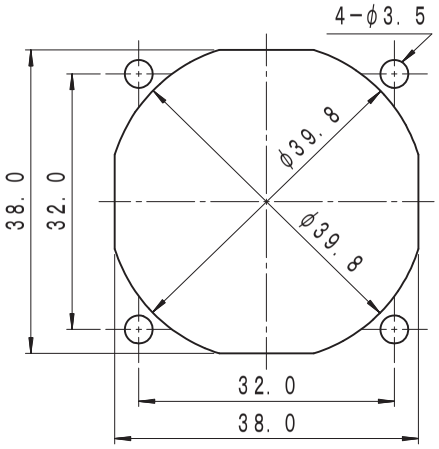

吐出側 (Outlet Side)

Confidential
MinebeaMitsumi Inc.
'17.03.30
KZW ISSUED
Airmover

MARK	DATE	REASON / ECN NO.	ENGINEER	APPROVED
2	17/03/28	ECN95066/B	MYZW	ETKH
1	16/12/19	ECN94902/A	MYZW	HASE

NMB MinebeaMitsumi Inc.

APPROVED	CHECKED	DRAWN
KWI	YSHR	ISK

単位 UNIT mm
尺度 SCALE

一般公差 TOL 寸法L	公差
L≦4	±0.1
4<L≦16	±0.2
16<L≦63	±0.3
63<L≦250	±0.5
250<L≦1000	±0.8
角度DEG	±0.5

材質 MATERIAL
表面粗さ SURF. ROUGH.
熱処理 HEAT TREAT
表面処理 FINISH

作成日 DATE 2013 / 10 / 03
品名 DESCRIPTION AUTO RESTART TYPE DC BRUSHLESS FAN
品番 PART NO. (MODEL NO.) 04020VA-12P-BA-02
葉番 SHEET 3/3
図番 DRAWING NO. 04020VA-12P-BA-02
改訂 REV. B