KOA SPEER ELECTRONICS, INC.

CCF-UM

universal modular fuse-links

EU RoHS COMPLIANT

features

- Meets IEC60127-4:2005 ED.3 specifications
- Excellent mechanical strength with ceramic body
- Stable fusing characteristics due to the original technology
- Excellent anti-surge characteristics
- Marking: White body color with black marking
- Products with lead-free terminations meet EU RoHS and China RoHS requirements

dimensions and construction

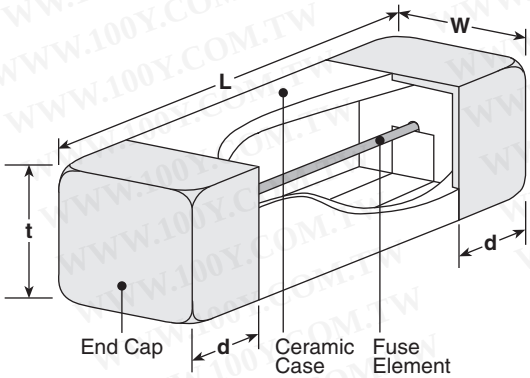

Type	Dimensions inches (mm)			
	L	W	t	d
CCF	.236±.008 (6.0±0.2)	.098±.008 (2.5±0.2)	.098±.008 (2.5±0.2)	.055±.008 (1.4±0.2)

勝 特 力 材 料 886-3-5753170
胜特力电子(上海) 86-21-34970699
胜特力电子(深圳) 86-755-83298787
Http://www.100y.com.tw

circuit protection

ordering information

New Part #

CCF	1	F	1	UM	T	TE
Type	Style	Fusing Characteristic	Rated Current	Rated Voltage (IEC)	Termination Material	Packaging
		F: Fast-acting	Reference rating chart	UM: 125Va.c. /125Vd.c.	T: Sn	TE: 4mm pitch plastic embossed

For further information on packaging, please refer to Appendix A.

勝 特 力 材 料 886-3-5753170
胜特力电子(上海) 86-21-34970699
胜特力电子(深圳) 86-755-83298787
Http://www.100y.com.tw

CCF-UM

universal modular fuse-links

applications and ratings

Part Designation	Current Rating	Voltage Rating	Operating Temperature Range	Interrupting Capacity	Fusing Characteristics Rated Current	Fusing Characteristics Fusing Time	Internal R. (mΩ) Max.	Normal Melting I²t (A², sec.)	Maximum Voltage Drop (mV)	Maximum Sustained Dissipation (mW)
CCF1F0.4	400mA	AC 125V DC 125V	-55°C to +125°C	AC 125V 50A DC 125V 50A	125% 200% 1000%	1 hour min. 120 sec. max. 0.001 sec. min. 0.01 sec. max.	510	0.030	700	500
CCF1F0.5	500mA						390	0.052	600	500
CCF1F0.63	630mA						250	0.087	500	500
CCF1F0.8	800mA						200	0.185	400	500
CCF1F1	1A						90.4	0.156	300	500
CCF1F1.25	1.25A						75.9	0.220	300	1000
CCF1F1.6	1.6A						59.3	0.513	300	1000
CCF1F2	2A						42.9	0.814	300	1000
CCF1F2.5	2.5A						36.6	1.31	300	1200
CCF1F3.15	3.15A						26.0	2.37	300	1500
CCF1F4	4A						20.1	3.85	300	2000
CCF1F5	5A						13.2	7.78	300	2500
CCF1F6.3	6.3A			AC 125V 63A DC 125V 63A			8.2	16.9	300	3000

environmental applications

Derating Curve

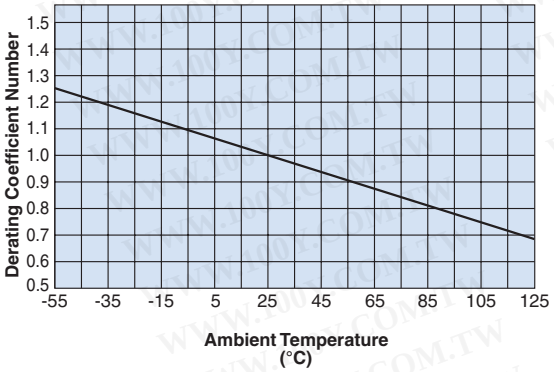

Fusing Characteristics

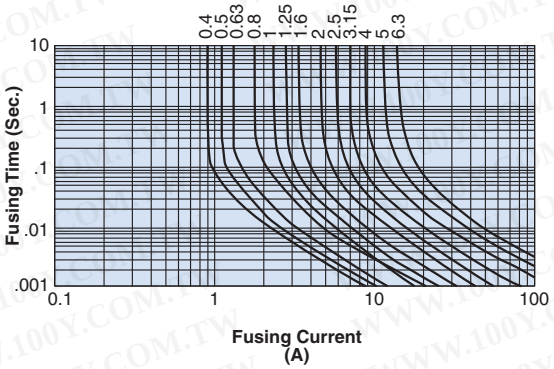

Performance Characteristics

Parameter	Requirement Limit	Requirement Typical	Test Method
Fusing Characteristics	Within specified time. Insulation resistance shall not be less than 0.1MΩ	—	Fusing time measured under rated current x 200% and x 100%
Surface Temperature Rise	Maximum temperature rise 85°C and not fusing	—	Surface temperature should be measured by rated current x 125%
Voltage Drop	Refer to ratings table	—	When the fuse-link has carried its rated current for a time sufficient to reach temperature stability
Maximum Sustained Dissipation	Refer to ratings table	—	At the end of electrify test to rated current x 125%, the voltage drop across the fuse-link is measured and used for the calculation of the sustained dissipation
Bending Test	Shall not exceed the ratings table	—	Distance between holding points 90mm, bent by 1mm at rate of 1mm/second
Resistance to Soldering Heat	Shall not exceed the ratings table	—	260°C ± 5°C, 10 seconds ± 0.5 seconds, After the solder depth, voltage drop across the fuse-link is measured
Load Life	±10%	±5.0%	70°C ± 2°C, 1000 hours, rated current x 70%, 1.5 hr ON, 0.5 hr OFF cycle
Load Life Moisture	±10%	±5.0%	40°C ± 2°C, 90 - 95% RH, 1000 hours, rated current x 70%, 1.5 hr ON, 0.5 hr OFF cycle
Rapid Change of Temperature	±10%	±5.0%	-55°C (30 minutes), +125°C (30 minutes), 100 cycles