勝 特 力 材 料 886-3-5753170
胜特力电子(上海) 86-21-34970699
胜特力电子(深圳) 86-755-83298787
Http://www.100y.com.tw

LYTE DIN Rail Power Supply

24V 480W 1 Phase / DRL-24V480W1A☐

LYTE

Highlights & Features

- Universal AC input voltage
- Built-in constant current circuit for reactive loads
- Up to 88.0% efficiency
- Full power from -20°C to +50°C operation at 230Vac @ 5000 meters or 16400 feet altitude
- Built-in DC OK relay contact option available
- Compliance to SEMI F47 @ 200Vac
- Conformal coating on PCBAs to protect against common dust and chemical pollutants

Safety Standards

CB Certified for worldwide use

Model Number: DRL-24V480W1A☐
Unit Weight: 1.30 kg (2.86 lb)
Dimensions (L x W x D): 123.6 x 85.5 x 128.5 mm (4.87 x 3.37 x 5.06 inch)

General Description

Delta's Lyte DIN Rail Power Supply series is designed for cost sensitive users who need to fulfill essential features needed for many general industrial applications, without compromising on quality and reliability. The convection-cooled Lyte series will operate between -20°C to +70°C, with full rated power available from -10°C to +50°C at 230Vac. The overcurrent protection is designed to operate in constant current mode, which makes the Lyte series suitable for inductive and capacitive load applications. The product is certified according to safety standards IEC/EN/UL 60950-1 for Information Technology Equipment (ITE) and UL 508 for Industrial Control Equipment (ICE). Electromagnetic radiated and conducted emissions are compliant to EN 55032, Class B; and, the product is fully compliant for environmental protection requirements per RoHS Directive 2011/65/EU.

Model Information

LYTE DIN Rail Power Supply

Model Number	Input Voltage Range	Rated Output Voltage	Rated Output Current
DRL-24V480W1A☐	85-264Vac (120-375Vdc)	24Vdc	20.0A

Model Numbering

DR	L –	24V	480W	1	A	☐
DIN Rail	Product Type L – LYTE Series	Output Voltage	Output Power	Single Phase	Delta Standard	A – Without DC OK Contact S – With DC OK Relay Contact

All parameters are specified at 25°C ambient and AC input unless otherwise indicated.
(December 2018, Rev. 02)

LYTE DIN Rail Power Supply
24V 480W 1 Phase / DRL-24V480W1A□

Specifications

Input Ratings / Characteristics

Nominal Input Voltage		100-240Vac
Input Voltage Range		85-264Vac
Nominal Input Frequency		50-60Hz
Input Frequency Range		47-63Hz
DC Input Voltage Range*		120-375Vdc
Input Current		5.4A typ. @ 115Vac, 2.7A typ. @ 230Vac
Efficiency at 100% Load		85% typ. @ 115Vac, 88% typ. @ 230Vac
Max Power Dissipation	0% load	5W @ 115Vac 4W @ 230Vac
	100% load	50W @ 115Vac 40W @ 230Vac
Max Inrush Current (Cold Start)		40A typ. @ 115Vac, 80A typ. @ 230Vac
Power Factor at 100% Load		> 0.95 @ 115Vac & 230Vac
Leakage Current		< 1mA @ 264Vac

*Fulfills test conditions for DC input. Safety approval for DC input can be obtained upon request.

Output Ratings / Characteristics**

Nominal Output Voltage		24Vdc
Factory Set Point Tolerance		24Vdc ± 2%
Output Voltage Adjustment Range		22-28Vdc
Output Current		20.0A (480W max.)
Output Power		480W
Line Regulation		< 0.5% (@ 85-264Vac, 100% load)
Load Regulation		< 1.5% (0-100% load) @ > -10°C to +70°C < 2.0% (0-100% load) @ ≤ -10°C to -20°C
PARD*** (20MHz)		< 120mVpp @ 0°C to +70°C < 240mVpp @ < 0°C to -10°C < 360mVpp @ < -10°C to -20°C
Rise Time		100ms typ. @ nominal input (100% load)
Start-up Time		1000ms typ. @ 115Vac & 230Vac (100% load)
Hold-up Time		10ms typ. @ 115Vac (100% load) 16ms typ. @ 230Vac (100% load)
Dynamic Response (Overshoot & Undershoot O/P Voltage)		± 10% (2400mVpp) @ 85-264Vac input, 0-50% load, 50-100% load (Slew Rate: 0.1A/μs)
Start-up with Capacitive Loads		8,000μF Max
Functional	DC OK Relay Contact	30V / 1A The relay contact are normally “ON” (closed) when the output (Vout) is greater than 90% of its rated value.

**For power de-rating from 40°C to 70°C @ 115Vac & 50°C to 70°C @ 230Vac, and Vin < 100Vac, see power de-rating on page 3.
***PARD is measured with an AC coupling mode, 5cm wires, and in parallel with 0.1μF ceramic capacitor & 47μF electrolytic capacitor.

LYTE DIN Rail Power Supply

24V 480W 1 Phase / DRL-24V480W1A□

Mechanical

Case Cover / Chassis		SGCC / Aluminium	
Dimensions (L x W x D)		123.6 x 85.5 x 128.5 mm (4.87 x 3.37 x 5.06 inch)	
Unit Weight		1.30 kg (2.86 lb)	
Indicator		Green LED (DC OK)	
Cooling System		Convection	
Terminal	Input	3 Pins (Rated 600V/35A)	
	Output	**DRL-24V480W1AA:** 4 Pins (Rated 300V/28A)	**DRL-24V480W1AS:** 6 Pins (Rated 300V/28A)
Wire	Input	AWG 16-12	
	Output	AWG 16-12	
Mounting Rail		Standard TS35 DIN Rail in accordance with EN 60715	
Noise (1 Meter from power supply)		Sound Pressure Level (SPL) < 25dBA	

Environment

Surrounding Air Temperature	Operating	-20°C to +70°C
	Storage	-40°C to +85°C
Power De-rating		> 40°C de-rate power by 1.67% / °C @ 115Vac > 50°C de-rate power by 2.5% / °C @ 230Vac < 100Vac de-rate power by 1% / Vac
Operating Humidity		5 to 95% RH (Non-Condensing)
Operating Altitude		0 to 5,000 Meters (16,400 ft.) for ITE application 0 to 2,000 Meters (6,560 ft.) for ICE application
Shock Test	Non-Operating	IEC 60068-2-27, 27, Half Sine Wave: 50G for duration of 22ms; 3 times per direction, 9 times in total
	Operating	IEC 60068-2-27, 27, Half Sine Wave: 4G for duration of 22ms; 3 time per direction, 9 times in total
Vibration	Non-Operating	IEC 60068-2-6, Random: 5Hz to 500Hz; 2.09G_{rms}; 20 min per axis for all X, Y, Z directions
	Operating	IEC 60068-2-6, Sine Wave: 10Hz to 500Hz @ 19.6m/s² (2G peak); displacement of 0.35mm; 10 min per cycle, 60 min for all X, Y, Z direction
Pollution Degree		2

Protections

Overvoltage	28.4V-35.2V, SELV Output, Latch Mode
Overload / Overcurrent	109-130% of rated load current, Continuous current
Over Temperature	Latch Mode
Short Circuit	Hiccup Mode, Non-Latching (Auto-Recovery when the fault is removed)
Internal Fuse	F10A / 250V
Degree of Protection	IP20
Protection Against Shock	Class I with PE* connection

*PE: Primary Earth

LYTE DIN Rail Power Supply
24V 480W 1 Phase / DRL-24V480W1A□

Reliability Data

MTBF	Telcordia SR-332	> 700,000 hrs	I/P: 100Vac, O/P: 100% load, Ta: 25°C
Expected Cap Life Time		10 years (115Vac & 230Vac, 50% load @ 40°C)	

Safety Standards / Directives

Safety Entry Low Voltage		SELV (EN 60950-1)	
Electrical Safety	TUV Bauart	EN 60950-1	
	UL/cUL recognized	UL 60950-1 and CSA C22.2 No. 60950-1 (File No. E131881)	
	CCC	GB4943.1	
	CB scheme	IEC 60950-1	
Industrial Control Equipment	UL/cUL listed	UL 508 and CSA C22.2 No. 107.1-01 (File No. E338991)	
CE		In conformance with EMC Directive 2014/30/EU and Low Voltage Directive 2014/35/EU	
Material and Parts		RoHS Directive 2011/65/EU Compliant	
Galvanic Isolation		3.0KVac	Input to Output
		2.0KVac	Input to Ground
		0.5KVac	Output to Ground

LYTE DIN Rail Power Supply

24V 480W 1 Phase / DRL-24V480W1A□

EMC

Emissions (CE & RE)		Generic Standards: EN 61000-6-3, EN 61000-6-4 CISPR 32, EN 55032, EN 55011, FCC Title 47: Class B; GB9254.1		
Component Power Supply for General Use		EN 61204-3		
Immunity		Generic Standards: EN 61000-6-1, EN 61000-6-2, EN 55024		
Electrostatic Discharge	IEC 61000-4-2	Level 4 Criteria A[1)] Air Discharge: 15kV Contact Discharge: 8kV		
Radiated Field	IEC 61000-4-3	Level 3 Criteria A[1)] 80MHz-1GHz, 10V/M with 1kHz tone / 80% modulation 1.4GHz-2GHz, 3V/M with 1kHz tone / 80% modulation 2GHz-2.7GHz, 1V/M with 1kHz tone / 80% modulation		
Electrical Fast Transient / Burst	IEC 61000-4-4	Level 3 Criteria A[1)] 2kV		
Surge	IEC 61000-4-5	Level 4 Criteria A[1)] Common Mode[3)]: 4kV Differential Mode[4)]: 2kV		
Conducted	IEC 61000-4-6	Level 3 Criteria A[1)] 150kHz-80MHz, 10Vrms		
Power Frequency Magnetic Fields	IEC 61000-4-8	Level 4 Criteria A[1)] 30A/m		
Voltage Dips and Interruptions	IEC 61000-4-11	0% of 100Vac, 20ms 40% of 100Vac, 200ms 70% of 100Vac, 500ms 0% of 100Vac, 5000ms 0% of 240Vac, 20ms 40% of 240Vac, 200ms 70% of 240Vac, 500ms 0% of 240Vac, 5000ms	Criteria A[1)] Criteria B[2)] Criteria A[1)] Criteria B[2)] Criteria A[1)] Criteria A[1)] Criteria A[1)] Criteria B[2)]	
Low Energy Pulse Test (Ring Wave)	IEC 61000-4-12	Level 3 Criteria A[1)] Common Mode[3)]: 2kV Differential Mode[4)]: 1kV		
Harmonic Current Emission		IEC/EN 61000-3-2, Class A; GB17625.1		
Voltage Fluctuation and Flicker		IEC/EN 61000-3-3		
Voltage Sag Immunity SEMI F47 - 0706		80% of 200Vac 70% of 200Vac 50% of 200Vac	160Vac, 1000ms 140Vac, 500ms 100Vac, 200ms	Criteria A[1)] Criteria A[1)] Criteria A[1)]

1) Criteria A: Normal performance within the specification limits
2) Criteria B: Temporary degradation or loss of function which is self-recoverable
3) Asymmetrical: Common mode (Line to earth)
4) Symmetrical: Differential mode (Line to line)

All parameters are specified at 25°C ambient and AC input unless otherwise indicated.
(December 2018, Rev. 02)

LYTE DIN Rail Power Supply

24V 480W 1 Phase / DRL-24V480W1A□

Block Diagram

DRL-24V480W1AA

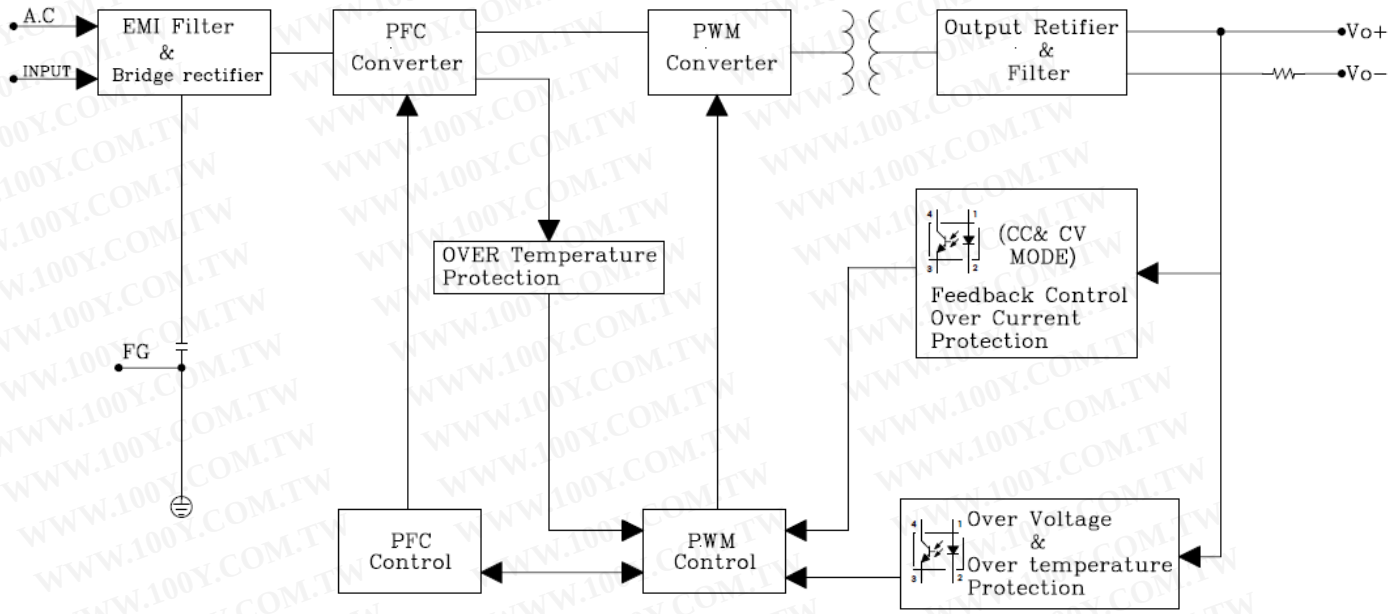

DRL-24V480W1AS

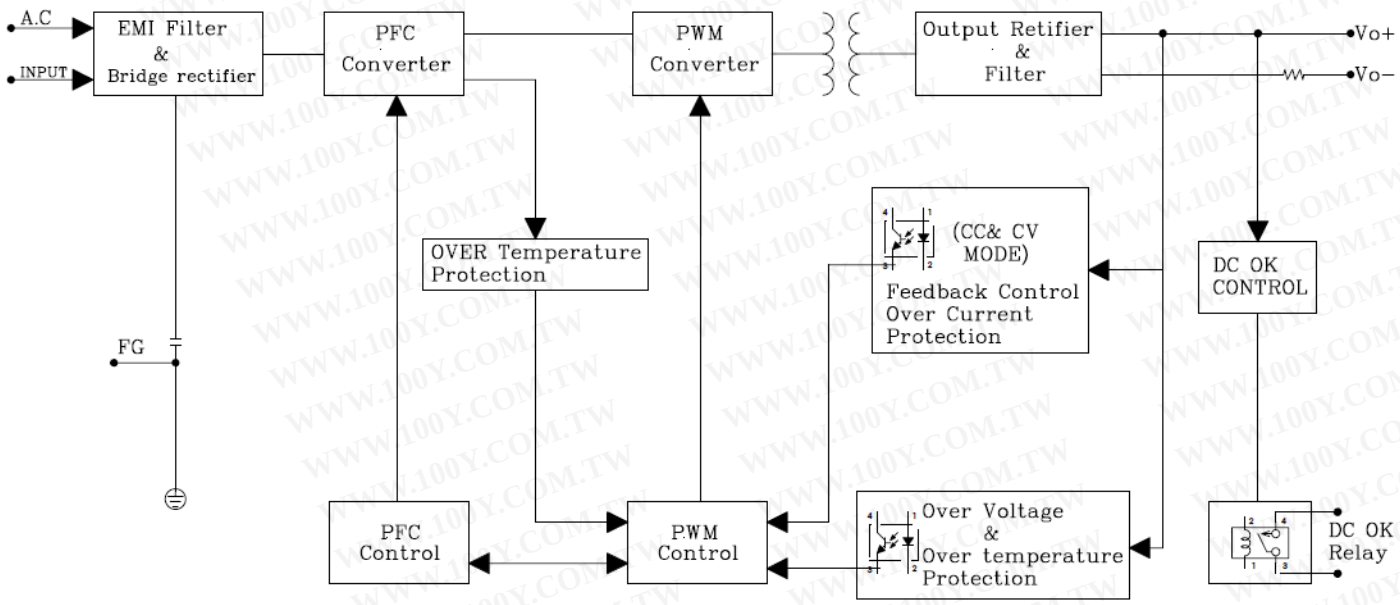

All parameters are specified at 25°C ambient and AC input unless otherwise indicated.
(December 2018, Rev. 02)

LYTE DIN Rail Power Supply

24V 480W 1 Phase / DRL-24V480W1A□

Device Description

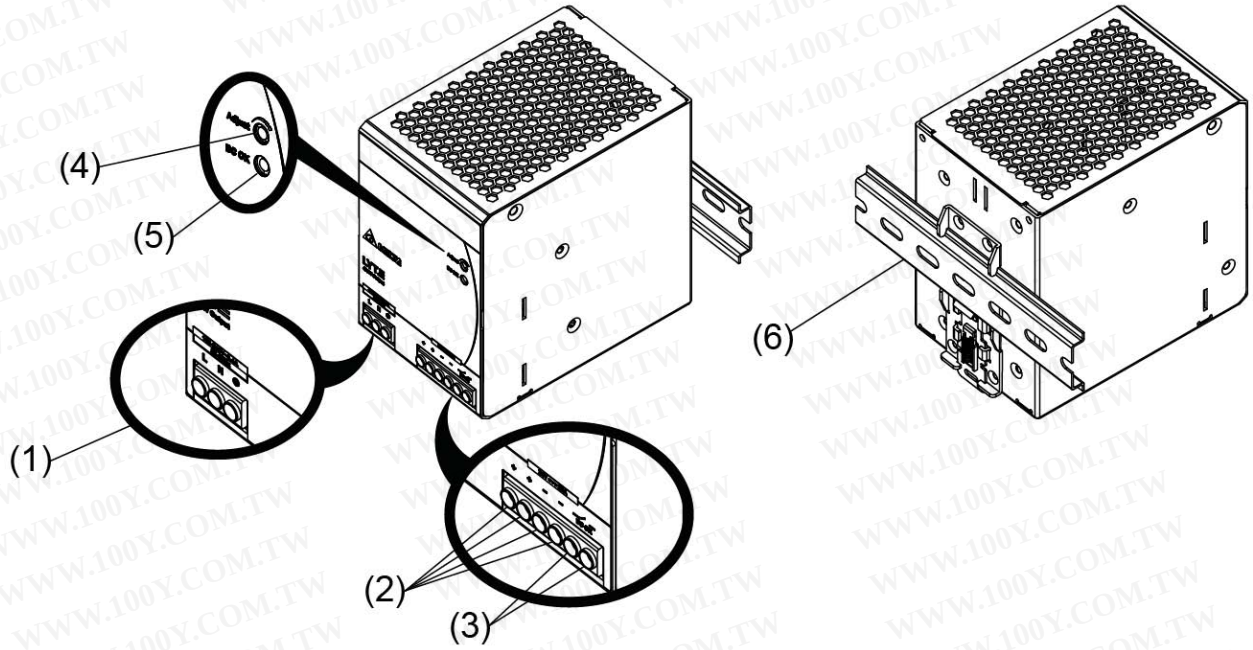

1) Input terminal block connector
2) Output terminal block connector
3) DC OK relay contact (for DRL-24V480W1AS only)
4) DC voltage adjustment potentiometer
5) DC OK LED (Green)
6) Universal mounting rail system

Dimensions

L x W x D: 123.6 x 85.5 x 128.5 mm (4.87 x 3.37 x 5.06 inch)

DRL-24V480W1AA

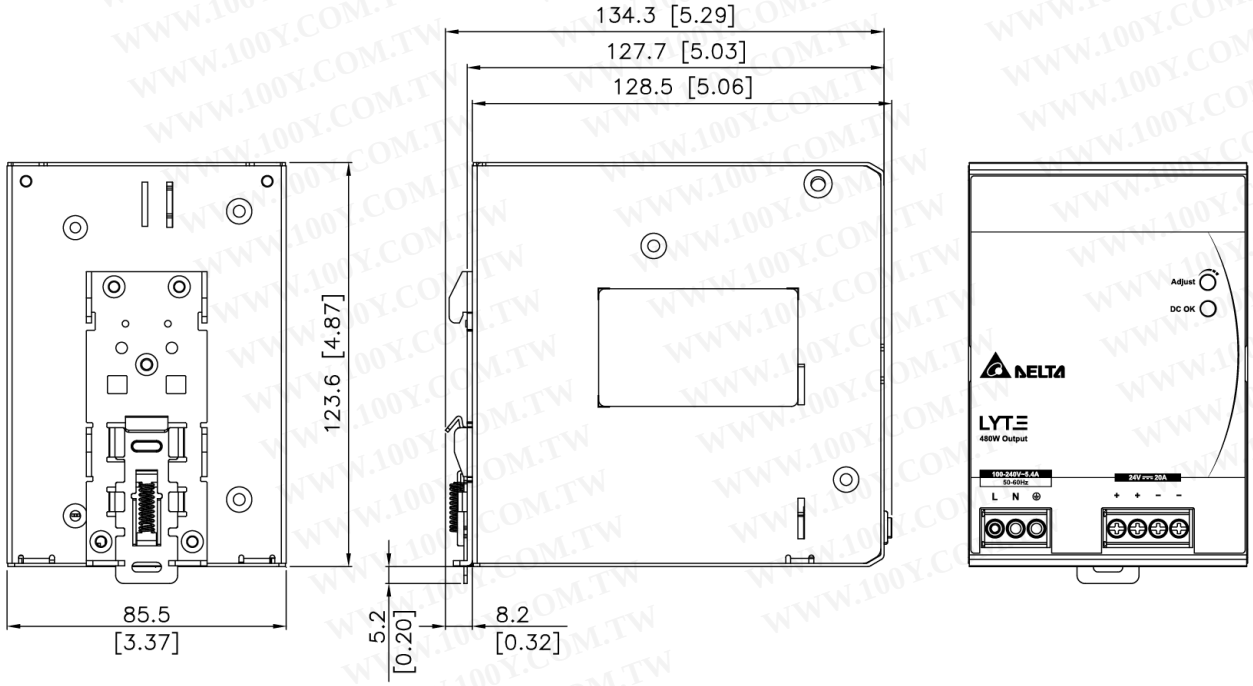

All parameters are specified at 25°C ambient and AC input unless otherwise indicated.
(December 2018, Rev. 02)

LYTE DIN Rail Power Supply

24V 480W 1 Phase / DRL-24V480W1A□

L x W x D: 123.6 x 85.5 x 128.5 mm (4.87 x 3.37 x 5.06 inch)

DRL-24V480W1AS

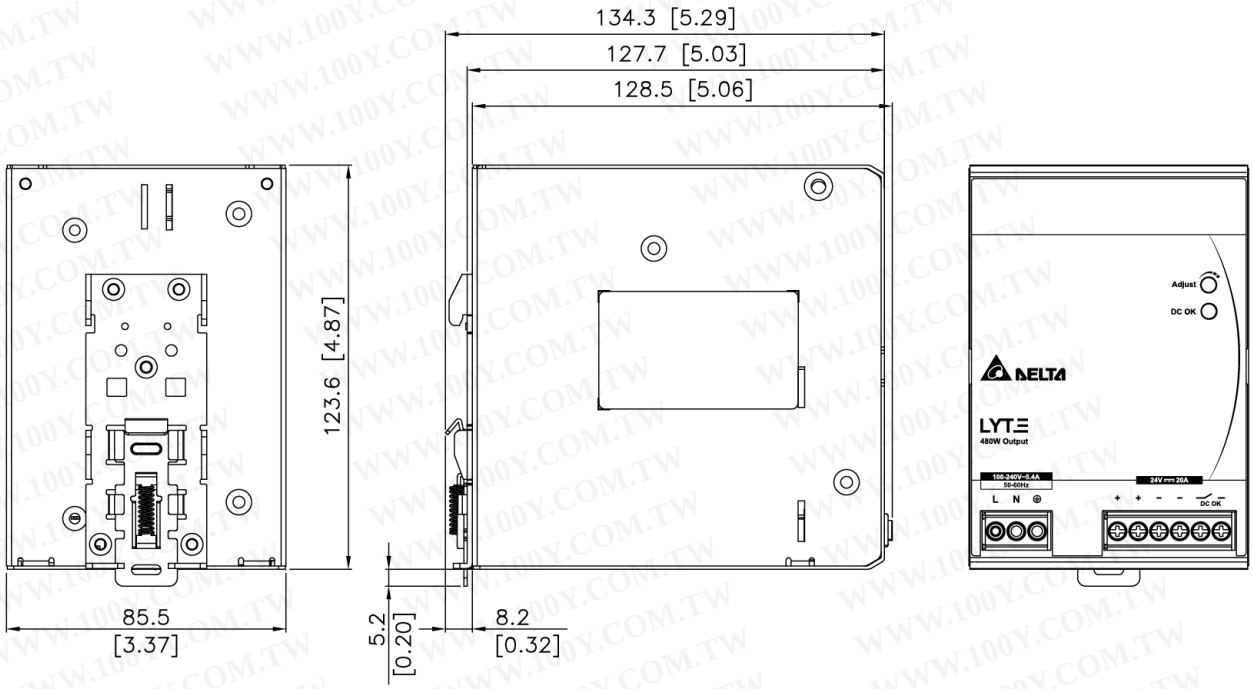

All parameters are specified at 25°C ambient and AC input unless otherwise indicated.
(December 2018, Rev. 02)

LYTE DIN Rail Power Supply
24V 480W 1 Phase / DRL-24V480W1A□

Engineering Data

Output Load De-rating VS Surrounding Air Temperature

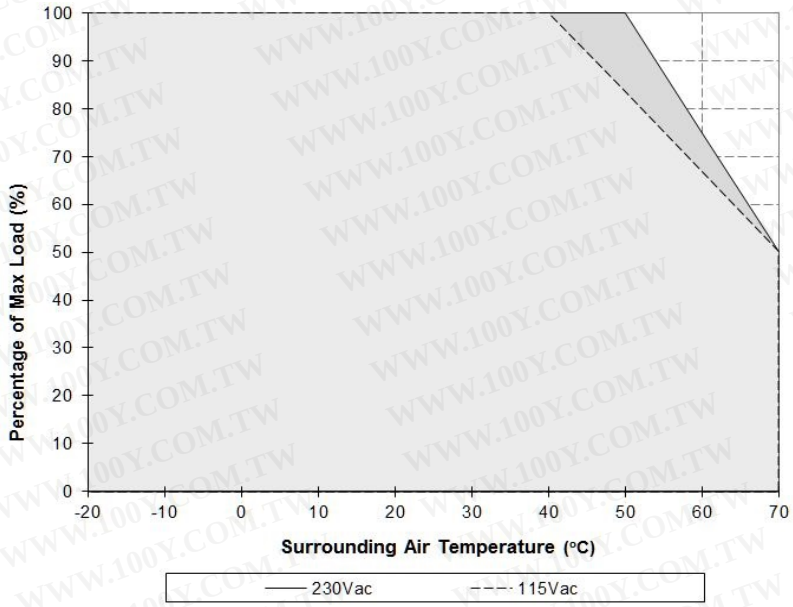

Fig. 1 De-rating for Vertical Mounting Orientation
> 40°C de-rate power by 1.67% / °C @ 115Vac (Test at 115Vac condition)
> 50°C de-rate power by 2.5% / °C @ 230Vac (Test at 230Vac condition)

Note

1. Power supply components may degrade, or be damaged, when the power supply is continuously used outside the shaded region, refer to the graph shown in Fig. 1.
2. If the output capacity is not reduced when the surrounding air temperature exceeds its specification as defined on Page 3 under "Environment", the device will run into Over Temperature Protection. When activated, power supply will latch off, until the surrounding air temperature is lowered or the load is reduced as far as necessary to keep the device in working condition, and require removal/re-application of input AC voltage in order to restart.
3. In order for the device to function in the manner intended, it is also necessary to keep a safety distance as recommended in the safety instructions while the device is in operation.
4. Depending on the surrounding air temperature and output load delivered by the power supply, the device can be very hot!
5. If the device has to be mounted in any other orientation, please contact **info@deltapsu.com** for more details.

Output Load De-rating VS Input Voltage

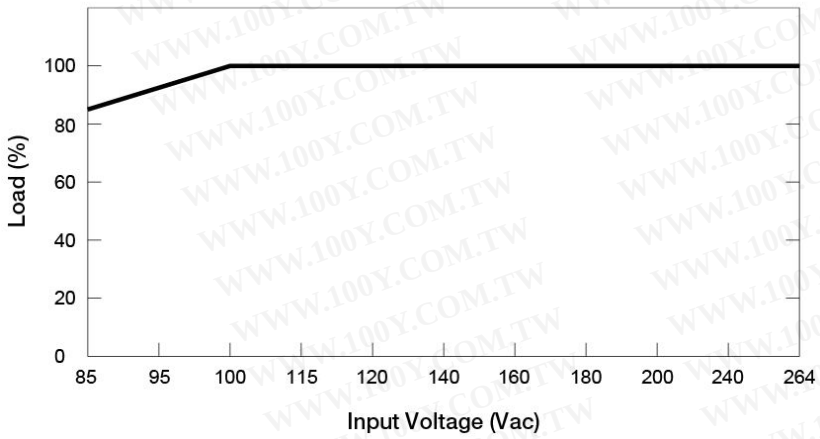

- No output power de-rating for the input voltage from 100Vac to 264Vac

LYTE DIN Rail Power Supply
24V 480W 1 Phase / DRL-24V480W1A□

Assembly & Installation

The power supply unit (PSU) can be mounted on 35mm DIN rails in accordance with EN 60715. The device should be installed with input terminal block at the bottom.

Each device is delivered ready to install.

Mounting

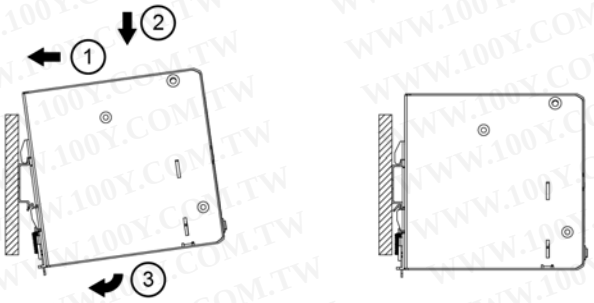

Fig. 2.1 Mounting

Snap on the DIN rail as shown in Fig. 2.1:
1. Tilt the unit upwards and insert it onto the DIN rail.
2. Push downwards until stopped.
3. Press against the bottom front side for locking.
4. Shake the unit slightly to ensure that it is secured.

Dismounting

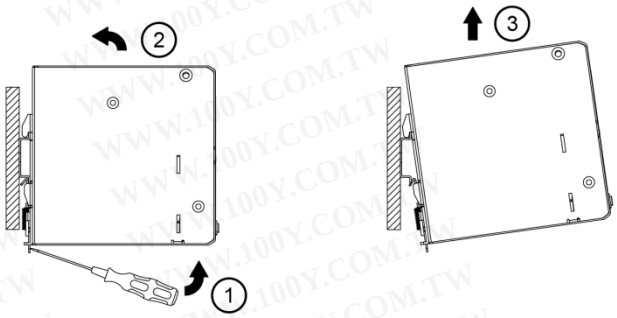

Fig. 2.2 Dismounting

To uninstall, pull or slide down the latch with screw driver as shown in Fig. 2.2. Then slide the power supply unit (PSU) in the opposite direction, release the latch and pull out the power supply unit (PSU) from the rail.

In accordance to EN 60950 / UL 60950, flexible cables require ferrules.
Use appropriate copper cables designed to sustain operating temperature of at least 60°C / 75°C or more to fulfill UL requirements.

LYTE DIN Rail Power Supply

24V 480W 1 Phase / DRL-24V480W1A□

Safety Instructions

■ **Vertical Mounting**

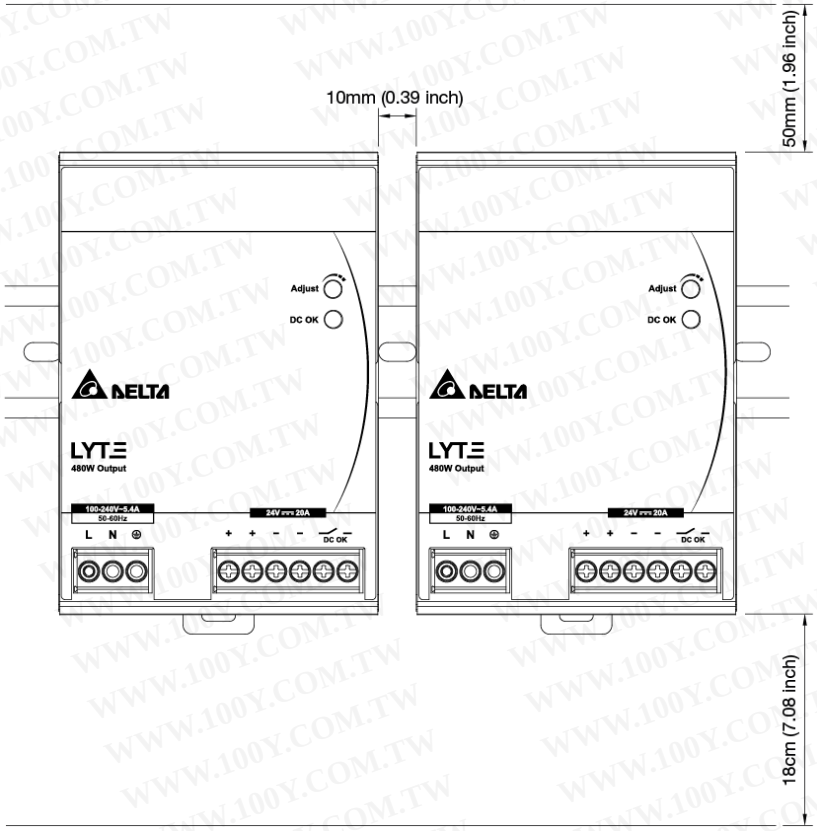

- ALWAYS switch mains of input power OFF before connecting and disconnecting the input voltage to the unit. If mains are not turned OFF, there is risk of explosion / severe damage.
- **To guarantee sufficient convection cooling, keep a distance of 50mm (1.96 inch) above and 18cm (7.08 inch) below the device as well as a lateral distance of 10mm (0.39 inch) to other units.**
- Note that the enclosure of the device can become very hot depending on the surrounding air temperature and load of the power supply. Risk of burns!
- The main power must be turned off before connecting or disconnecting wires to the terminals.
- DO NOT insert any objects into the unit.
- Hazardous voltages may be present for up to 5 minutes after the input mains voltage is disconnected. Do not touch the unit during this time.
- The power supplies are built in units and must be installed in a cabinet or room (condensation free environment and indoor location) that is relatively free of conductive contaminants.

LYTE DIN Rail Power Supply

24V 480W 1 Phase / DRL-24V480W1A□

Functions

■ **Graph illustrating the Start-up Time, Rise Time, and Hold-up Time**

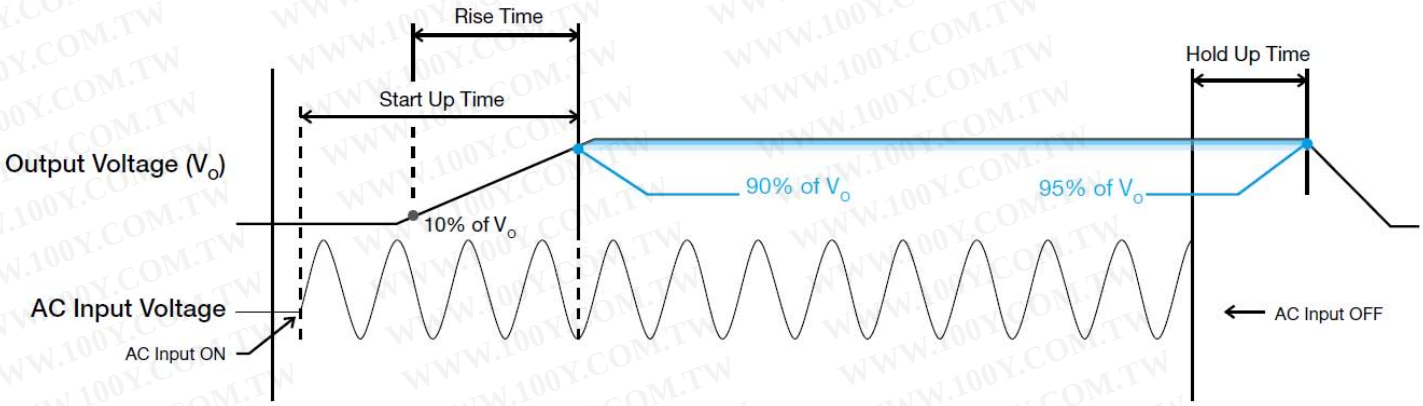

Start-up Time

The time required for the output voltage to reach 90% of its final steady state set value, after the input voltage is applied.

Rise Time

The time required for the output voltage to change from 10% to 90% of its final steady state set value.

Hold-up Time

Time between the collapse of the AC input voltage, and the output falling to 95% of its steady state set value.

Inrush Current

Inrush current is the peak, instantaneous, input current measured and, occurs when the input voltage is first applied. For AC input voltages, the maximum peak value of inrush current will occur during the first half cycle of the applied AC voltage. This peak value decreases exponentially during subsequent cycles of AC voltage.

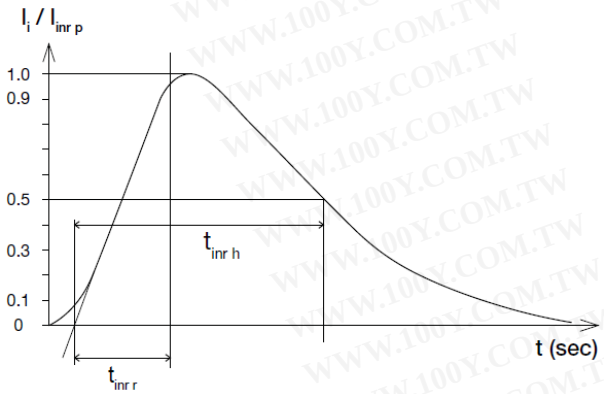

Dynamic Response

The power supply output voltage will remains within ±10% of its steady state value, when subjected to a dynamic load from 0% to 100% of its rated current.

■ **50% duty cycle / 5Hz to 100Hz**

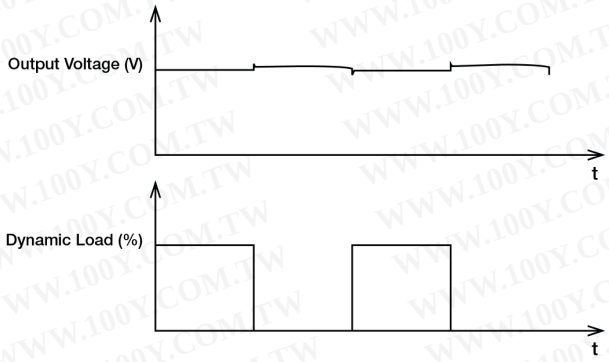

All parameters are specified at 25°C ambient and AC input unless otherwise indicated.
(December 2018, Rev. 02)

LYTE DIN Rail Power Supply

24V 480W 1 Phase / DRL-24V480W1A□

Overload & Overcurrent Protections (Continuous Current)

The power supply's Overload (OLP) and Overcurrent (OCP) Protections will be activated when output current is 109~130% of I_O (Max load). Upon such an occurrence, the V_O (output voltage) will start to droop. Once the power supply has reached its maximum power limit, the protection will be activated; and, the power supply will operate in continuous current. The power supply will recover once the cause of OLP or OCP is removed, and I_O (output current) is back within the specified range.

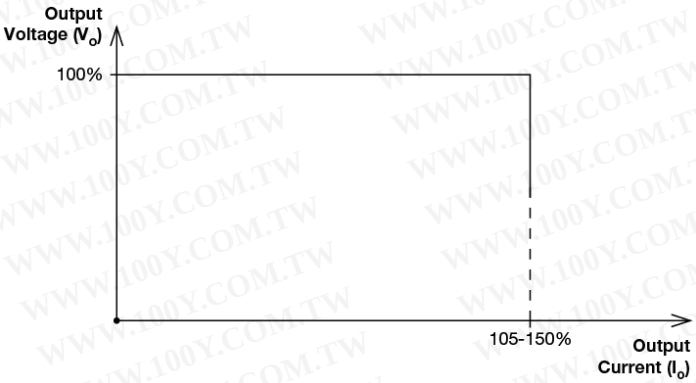

Short Circuit Protection (Auto-Recovery)

The power supply's output Short Circuit Protection function also provides protection against short circuits. When a short circuit is applied, the output current will operate in "Hiccup mode". The power supply will return to normal operation after the short circuit is removed.

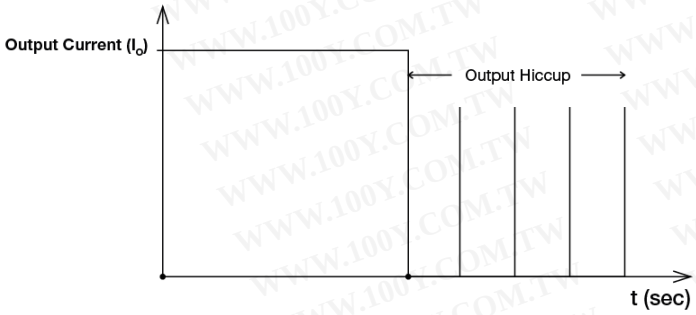

Overvoltage Protection (Latch Mode)

The power supply's overvoltage circuit will be activated when its internal feedback circuit fails. The output voltage shall not exceed its specifications as described in "Protections" section. Power supply will latch off, and require removal/re-application of input AC voltage in order to restart.

The power supply should be latch.

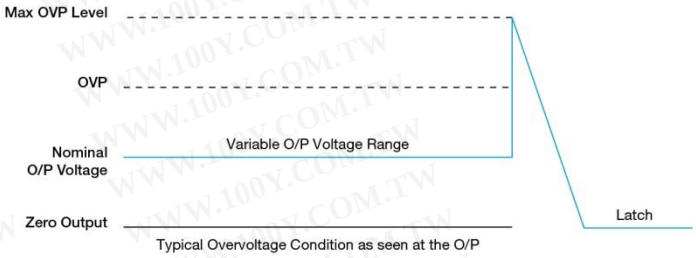

Over Temperature Protection (Latch Mode)

As described in load de-rating section, the power supply also has Over Temperature Protection (OTP). In the event of a higher operating temperature at 100% load; or, when the operating temperature is beyond what is recommended in the de-rating graph, the OTP circuit will be activated. When activated, power supply will latch off, until the surrounding air temperature drops to its normal operating temperature or the load is reduced as recommended in the de-rating graph. Removal/re-application of input AC voltage will then be required in order to restart.

LYTE DIN Rail Power Supply
24V 480W 1 Phase / DRL-24V480W1A□

Operating Mode

■ Redundant Operation

In order to ensure proper redundant operation for the power supply units (PSUs), the output voltage difference between the two units must be kept at 0.45~0.5V for these 24V supplies. Follow simple steps given below to set them up for the redundant operation:

Step 1.
Measure output voltage of PSU 1 and PSU 2. If PSU 1 is the master unit, then V_O of PSU 1 must be higher than PSU 2. In order to set the output voltage, individually connect each power supply to 50% of rated load at any line voltage from 85-264Vac, and set the PSU 1 and PSU 2 output voltage.

Step 2.
Connect the power supply units PSU 1 and PSU 2 to V_{in} 1 & V_{in} 2, respectively, of the DRR-40N (or 40A) module shown on the right of above diagram.

Step 3.
Connect the system load to V_{out}. Please note that output voltage V_{out} from DRR module will be = V_O (output voltage of power supply) – V_{drop}* (in DRR module).

*Vdrop will vary from 0.60V to 0.90V (Typical 0.65V) depending on the load current and surrounding air temperature.

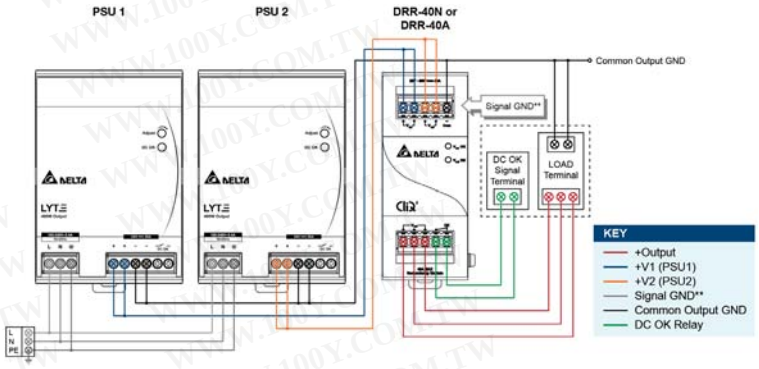

**The Signal GND in the DRR module is for the built-in LED and DC OK signals. The Output GND terminals from the two PSU's do not need to be connected to the Signal GND terminal.

Fig. 3 Redundant Operation Connection Diagram

■ Parallel Operation

The power supply units (PSUs) can also be used for parallel operation in order to increase the output power. The difference in output voltage between the two units must be kept to within 25mV of each other. This difference must be verified with the same output load connected independently to each unit.

Parameters such as EMI, inrush current, leakage current, PARD, start up time will be different from those on the datasheet, when two units are connected in parallel. The user will need to verify that any differences will still allow the two power supplies connected in parallel will work properly in their product/application.

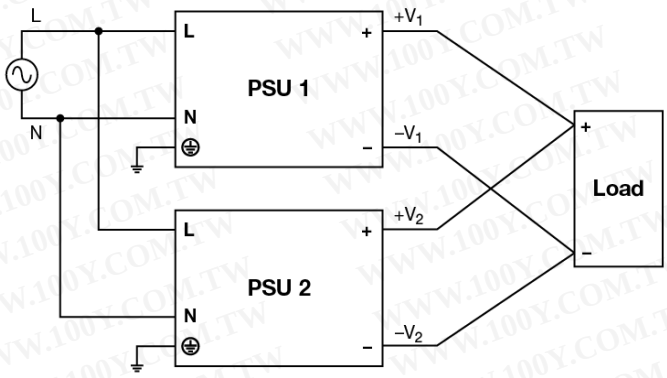

Fig. 4 Parallel Operation Connection Diagram

LYTE DIN Rail Power Supply

24V 480W 1 Phase / DRL-24V480W1A□

勝 特 力 材 料 886-3-5753170
胜特力电子(上海) 86-21-34970699
胜特力电子(深圳) 86-755-83298787
Http://www.100y.com.tw

Others

Delta RoHS Compliant

Restriction of the usage of hazardous substances

The European directive 2011/65/EU limits the maximum impurity level of homogeneous materials such as lead, mercury, cadmium, chrome, polybrominated flame retardants PBB and PBDE for the use in electrical and electronic equipment. RoHS is the abbreviation for “Restriction of the use of certain hazardous substances in electrical and electronic equipment”.

This product conforms to this standard.

Conformal Coating

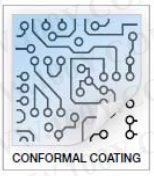

The Protective Coating Technology

Delta Electronics Group has designed the perfect dipping technique which penetrates everywhere including under device, and prevents leakage. The conformal coating dipping can be applied to PCBAs or circuit board. The coating preserves the performance of precision electronic primarily by preventing ionizable contaminants such as salt from reaching circuit nodes, where the material slumps around sharp edges. This can be a problem especially in highly conversing atmosphere.

PFC – Norm EN 61000-3-2

Line Current Harmonic content

Typically, the input current waveform is not sinusoidal due to the periodical peak charging of the input capacitor. In industrial environment, complying with EN 61000-3-2 is only necessary under special conditions. Complying to this standard can have some technical drawbacks, such as lower efficiency as well as some commercial aspects such as higher purchasing costs. Frequently, the user does not profit from fulfilling this standard, therefore, it is important to know whether it is mandatory to meet this standard for a specific application.

Attention

Delta provides all information in the datasheets on an “AS IS” basis and does not offer any kind of warranty through the information for using the product. In the event of any discrepancy between the information in the catalog and datasheets, the datasheets shall prevail (please refer to **www.DeltaPSU.com** for the latest datasheets information). Delta shall have no liability of indemnification for any claim or action arising from any error for the provided information in the datasheets. Customer shall take its responsibility for evaluation of using the product before placing an order with Delta.

Delta reserves the right to make changes to the information described in the datasheets without notice.