TOSHIBA TRANSISTOR SILICON PNP EPITAXIAL TYPE (PCT PROCESS)

2SA966

AUDIO POWER AMPLIFIER APPLICATIONS

- Complementary to 2SC2236 and 3 W Output Applications.

Unit in mm

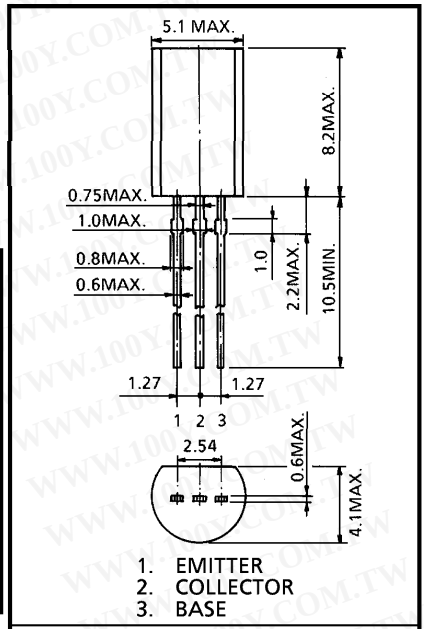

JEDEC	TO-92MOD
JEITA	—
TOSHIBA	2-5J1A

Weight : 0.36 g (Typ.)

MAXIMUM RATINGS (Ta = 25°C)

CHARACTERISTIC	SYMBOL	RATING	UNIT
Collector-Base Voltage	V_{CBO}	−30	V
Collector-Emitter Voltage	V_{CEO}	−30	V
Emitter-Base Voltage	V_{EBO}	−5	V
Collector Current	I_C	−1.5	A
Emitter Current	I_E	1.5	A
Collector Power Dissipation	P_C	900	mW
Junction Temperature	T_j	150	°C
Storage Temperature Range	T_{stg}	−55~150	°C

ELECTRICAL CHARACTERISTICS (Ta = 25°C)

CHARACTERISTIC	SYMBOL	TEST CONDITION	MIN.	TYP.	MAX.	UNIT
Collector Cut-off Current	I_{CBO}	V_{CB} = −30 V, I_E = 0	—	—	−100	nA
Emitter Cut-off Current	I_{EBO}	V_{EB} = −5 V, I_C = 0	—	—	−100	nA
Collector-Emitter Breakdown Voltage	$V_{(BR)CEO}$	I_C = −10 mA, I_B = 0	−30	—	—	V
Emitter-Base Breakdown Voltage	$V_{(BR)EBO}$	I_E = −1 mA, I_C = 0	−5	—	—	V
DC Current Gain	h_{FE} (Note)	V_{CE} = −2 V, I_C = −500 mA	100	—	320	
Collector-Emitter Saturation Voltage	$V_{CE(sat)}$	I_C = −1.5 A, I_B = −0.03 A	—	—	−2.0	V
Base-Emitter Voltage	V_{BE}	V_{CE} = −2 V, I_C = −500 mA	—	—	−1.0	V
Transition Frequency	f_T	V_{CE} = −2 V, I_C = −500 mA	—	120	—	MHz
Collector Output Capacitance	C_{ob}	V_{CB} = −10 V, I_E = 0, f = 1 MHz	—	40	—	pF

(Note) : h_{FE} Classification O : 100~200, Y : 160~320

勝 特 力 材 料 886-3-5753170
胜特力电子(上海) 86-21-54151736
胜特力电子(深圳) 86-755-83298787
Http://www.100y.com.tw