2SK1341

Silicon N-Channel MOS FET

HITACHI

Application

High speed power switching

Features

- Low on-resistance
- High speed switching
- Low drive current
- No secondary breakdown
- Suitable for switching regulator and DC-DC converter

Outline

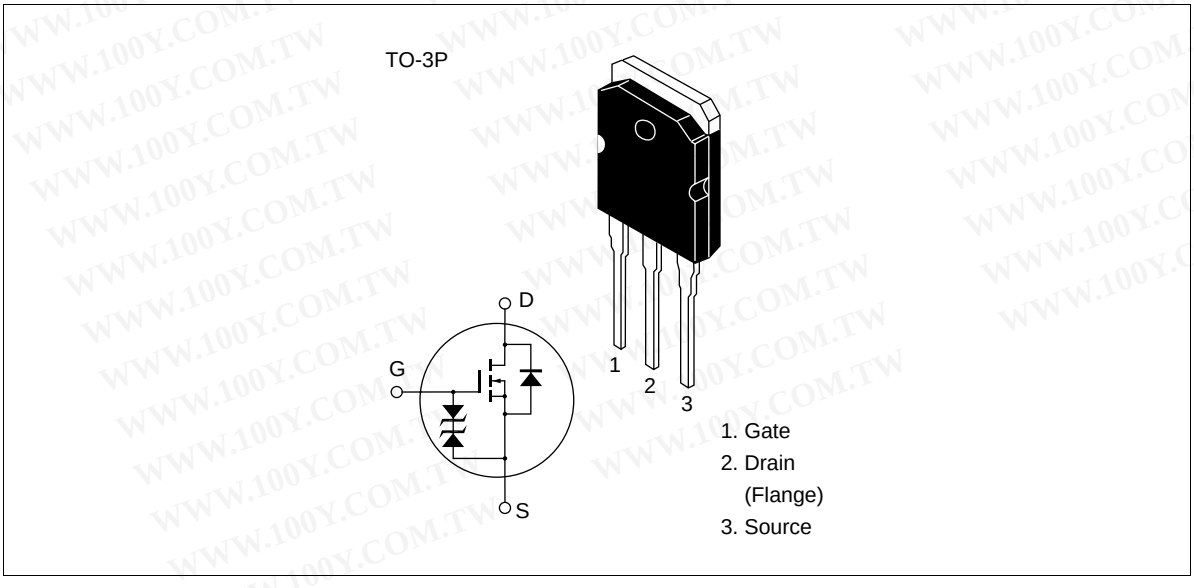

Hitachi semiconductor

Absolute Maximum Ratings (Ta = 25°C)

Item	Symbol	Ratings	Unit
Drain to source voltage	V_{DSS}	900	V
Gate to source voltage	V_{GSS}	±30	V
Drain current	I_D	6	A
Drain peak current	$I_{D(pulse)}$ *1	15	A
Body to drain diode reverse drain current	I_{DR}	6	A
Channel dissipation	Pch*2	100	W
Channel temperature	Tch	150	°C
Storage temperature	Tstg	–55 to +150	°C

Notes: 1. PW ≤ 10 µs, duty cycle ≤ 1%
2. Value at T_C = 25°C

Electrical Characteristics (Ta = 25°C)

Item	Symbol	Min	Typ	Max	Unit	Test conditions
Drain to source breakdown voltage	$V_{(BR)DSS}$	900	—	—	V	I_D = 10 mA, V_{GS} = 0
Gate to source breakdown voltage	$V_{(BR)GSS}$	±30	—	—	V	I_G = ±100 µA, V_{DS} = 0
Gate to source leak current	I_{GSS}	—	—	±10	µA	V_{GS} = ±25 V, V_{DS} = 0
Zero gate voltage drain current	I_{DSS}	—	—	250	µA	V_{DS} = 720 V, V_{GS} = 0
Gate to source cutoff voltage	$V_{GS(off)}$	2.0	—	3.0	V	I_D = 1 mA, V_{DS} = 10 V
Static drain to source on state resistance	$R_{DS(on)}$	—	2.0	3.0	Ω	I_D = 3 A, V_{GS} = 10 V *[1]
Forward transfer admittance	|yfs|	2.3	3.7	—	S	I_D = 3 A, V_{DS} = 20 V *[1]
Input capacitance	Ciss	—	980	—	pF	V_{DS} = 10 V, V_{GS} = 0,
Output capacitance	Coss	—	400	—	pF	f = 1 MHz
Reverse transfer capacitance	Crss	—	195	—	pF	
Turn-on delay time	$t_{d(on)}$	—	20	—	ns	I_D = 3 A, V_{GS} = 10 V,
Rise time	t_r	—	80	—	ns	R_L = 10 Ω
Turn-off delay time	$t_{d(off)}$	—	125	—	ns	
Fall time	t_f	—	100	—	ns	
Body to drain diode forward voltage	V_{DF}	—	0.9	—	V	I_F = 6 A, V_{GS} = 0
Body to drain diode reverse recovery time	t_{rr}	—	1000	—	ns	I_F = 6 A, V_{GS} = 0, di_F/dt = 100 A/µs

Note: 1. Pulse test