勝 特 力 材 料 886-3-5753170
胜特力电子(上海) 86-21-34970699
胜特力电子(深圳) 86-755-83298787
Http://www.100y.com.tw

International
IOR Rectifier

PD - 95147

IRFZ24NS/LPbF

HEXFET® Power MOSFET

- Advanced Process Technology
- Surface Mount (IRFZ24NS)
- Low-profile through-hole (IRFZ24NL)
- 175°C Operating Temperature
- Fast Switching
- Fully Avalanche Rated
- Lead-Free

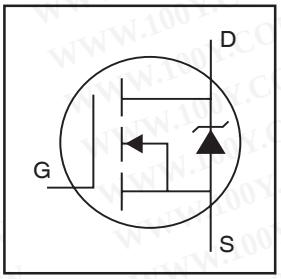

V_{DSS} = 55V

$R_{DS(on)}$ = 0.07Ω

I_D = 17A

Description

Fifth Generation HEXFETs from International Rectifier utilize advanced processing techniques to achieve extremely low on-resistance per silicon area. This benefit, combined with the fast switching speed and ruggedized device design that HEXFET Power MOSFETs are well known for, provides the designer with an extremely efficient and reliable device for use in a wide variety of applications.

The D^2Pak is a surface mount power package capable of accommodating die sizes up to HEX-4. It provides the highest power capability and the lowest possible on-resistance in any existing surface mount package. The D^2Pak is suitable for high current applications because of its low internal connection resistance and can dissipate up to 2.0W in a typical surface mount application.

The through-hole version (IRFZ24NL) is available for low-profile applications.

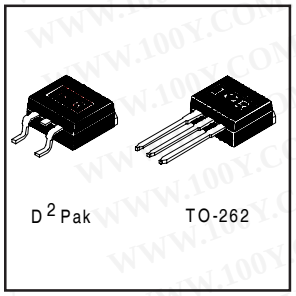

Absolute Maximum Ratings

	Parameter	Max.	Units
I_D @ T_C = 25°C	Continuous Drain Current, V_{GS} @ 10V⑤	17	A
I_D @ T_C = 100°C	Continuous Drain Current, V_{GS} @ 10V⑤	12	
I_{DM}	Pulsed Drain Current ①⑤	68	
P_D @T_A = 25°C	Power Dissipation	3.8	W
P_D @T_C = 25°C	Power Dissipation	45	W
	Linear Derating Factor	0.30	W/°C
V_{GS}	Gate-to-Source Voltage	± 20	V
E_{AS}	Single Pulse Avalanche Energy②⑤	71	mJ
I_{AR}	Avalanche Current①	10	A
E_{AR}	Repetitive Avalanche Energy①	4.5	mJ
dv/dt	Peak Diode Recovery dv/dt ③⑤	6.8	V/ns
T_J T_{STG}	Operating Junction and Storage Temperature Range	-55 to + 175	°C
	Soldering Temperature, for 10 seconds	300 (1.6mm from case)	

Thermal Resistance

	Parameter	Typ.	Max.	Units
$R_{\theta JC}$	Junction-to-Case	——	3.3	°C/W
$R_{\theta JA}$	Junction-to-Ambient (PCB Mounted,steady-state)**	——	40	

04/19/04

勝 特 力 材 料 886-3-5753170
胜特力电子(上海) 86-21-34970699
胜特力电子(深圳) 86-755-83298787
Http://www.100y.com.tw

Electrical Characteristics @ T_J = 25°C (unless otherwise specified)

	Parameter	Min.	Typ.	Max.	Units	Conditions
$V_{(BR)DSS}$	Drain-to-Source Breakdown Voltage	55	—	—	V	V_{GS} = 0V, I_D = 250μA
$\Delta V_{(BR)DSS}/\Delta T_J$	Breakdown Voltage Temp. Coefficient	—	0.052	—	V/°C	Reference to 25°C, I_D =1mA⑤
$R_{DS(on)}$	Static Drain-to-Source On-Resistance	—	—	0.07	Ω	V_{GS} =10V, I_D = 10A ④
$V_{GS(th)}$	Gate Threshold Voltage	2.0	—	4.0	V	V_{DS} = V_{GS}, I_D = 250μA
g_{fs}	Forward Transconductance	4.5	—	—	S	V_{DS} = 25V, I_D = 10A⑤
I_{DSS}	Drain-to-Source Leakage Current	—	—	25	μA	V_{DS} = 55V, V_{GS} = 0V
		—	—	250		V_{DS} = 44V, V_{GS} = 0V, T_J = 150°C
I_{GSS}	Gate-to-Source Forward Leakage	—	—	100	nA	V_{GS} = 20V
	Gate-to-Source Reverse Leakage	—	—	-100		V_{GS} = -20V
Q_g	Total Gate Charge	—	—	20	nC	I_D = 10A
Q_{gs}	Gate-to-Source Charge	—	—	5.3		V_{DS} = 44V
Q_{gd}	Gate-to-Drain ("Miller") Charge	—	—	7.6		V_{GS} = 10V, See Fig. 6 and 13 ④⑤
$t_{d(on)}$	Turn-On Delay Time	—	4.9	—	ns	V_{DD} = 28V
t_r	Rise Time	—	34	—		I_D = 10A
$t_{d(off)}$	Turn-Off Delay Time	—	19	—		R_G = 24Ω
t_f	Fall Time	—	27	—		R_D = 2.6Ω, See Fig. 10 ④⑤
L_S	Internal Source Inductance	—	7.5	—	nH	Between lead, and center of die contact
C_{iss}	Input Capacitance	—	370	—	pF	V_{GS} = 0V
C_{oss}	Output Capacitance	—	140	—		V_{DS} = 25V
C_{rss}	Reverse Transfer Capacitance	—	65	—		f = 1.0MHz, See Fig. 5⑤

Source-Drain Ratings and Characteristics

	Parameter	Min.	Typ.	Max.	Units	Conditions
I_S	Continuous Source Current (Body Diode)	—	—	17	A	MOSFET symbol showing the integral reverse p-n junction diode. 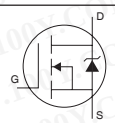
I_{SM}	Pulsed Source Current (Body Diode) ①	—	—	68		
V_{SD}	Diode Forward Voltage	—	—	1.3	V	T_J = 25°C, I_S = 10A, V_{GS} = 0V ④
t_{rr}	Reverse Recovery Time	—	56	83	ns	T_J = 25°C, I_F = 10A
Q_{rr}	Reverse Recovery Charge	—	120	180	nC	di/dt = 100A/μs ④⑤
t_{on}	Forward Turn-On Time	Intrinsic turn-on time is negligible (turn-on is dominated by L_S+L_D)				

Notes:

① Repetitive rating; pulse width limited by max. junction temperature. (See fig. 11)

② Starting T_J = 25°C, L =1.0mH R_G = 25Ω, I_{AS} = 10A. (See Figure 12)

③ $I_{SD} \leq$ 10A, di/dt $\leq$ 280A/μs, $V_{DD} \leq V_{(BR)DSS}$, $T_J \leq$ 175°C

④ Pulse width $\leq$ 280μs; duty cycle $\leq$ 2%.

⑤ Uses IRFZ24N data and test conditions

** When mounted on 1" square PCB (FR-4 or G-10 Material).
For recommended footprint and soldering techniques refer to application note #AN-994.

勝 特 力 材 料 886-3-5753170
胜特力电子(上海) 86-21-34970699
胜特力电子(深圳) 86-755-83298787
Http://www.100y.com.tw

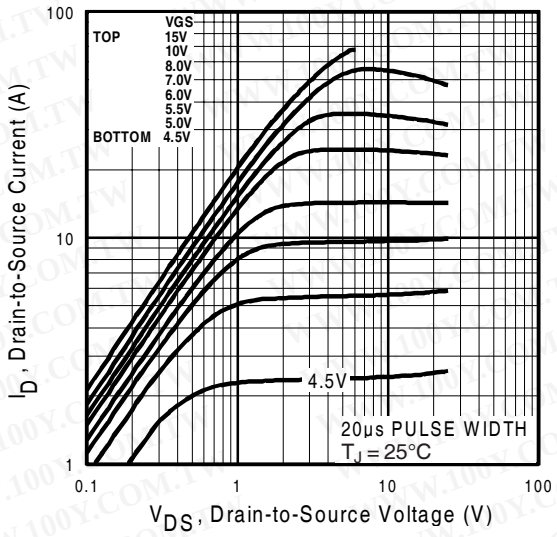

Fig 1. Typical Output Characteristics

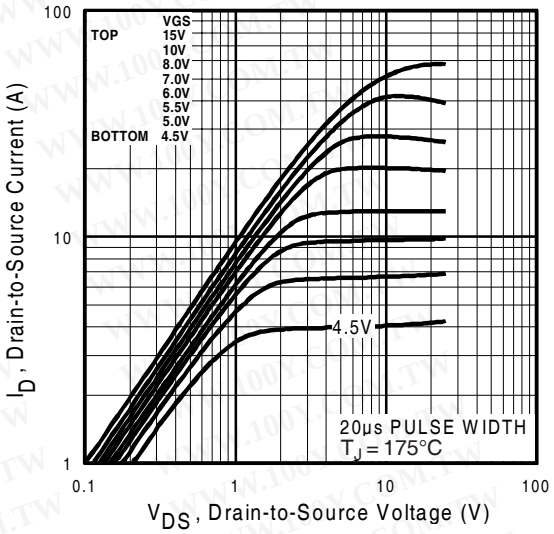

Fig 2. Typical Output Characteristics

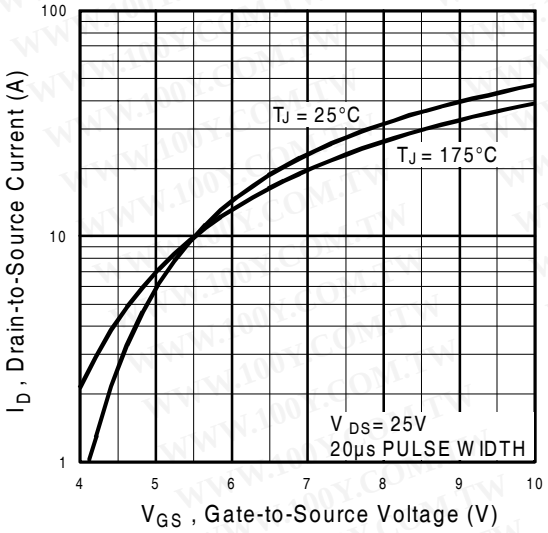

Fig 3. Typical Transfer Characteristics

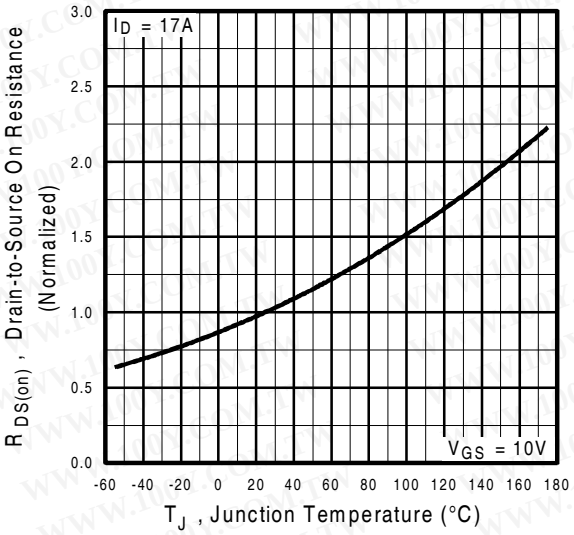

Fig 4. Normalized On-Resistance Vs. Temperature

勝 特 力 材 料 886-3-5753170
胜特力电子(上海) 86-21-34970699
胜特力电子(深圳) 86-755-83298787
Http://www.100y.com.tw

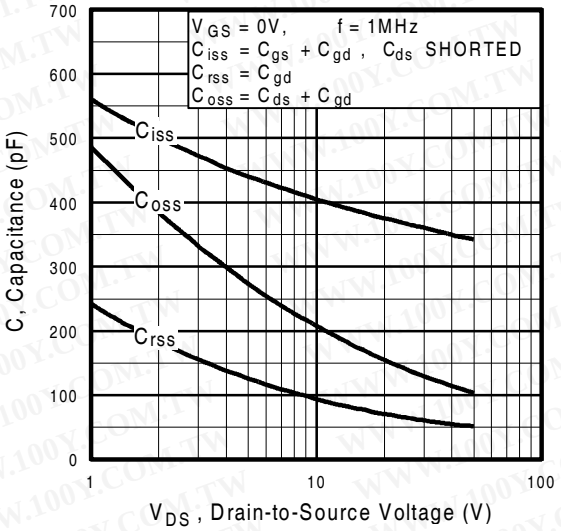

Fig 5. Typical Capacitance Vs. Drain-to-Source Voltage

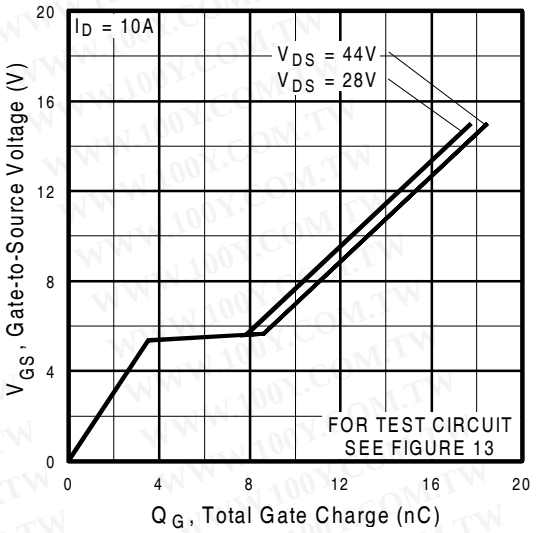

Fig 6. Typical Gate Charge Vs. Gate-to-Source Voltage

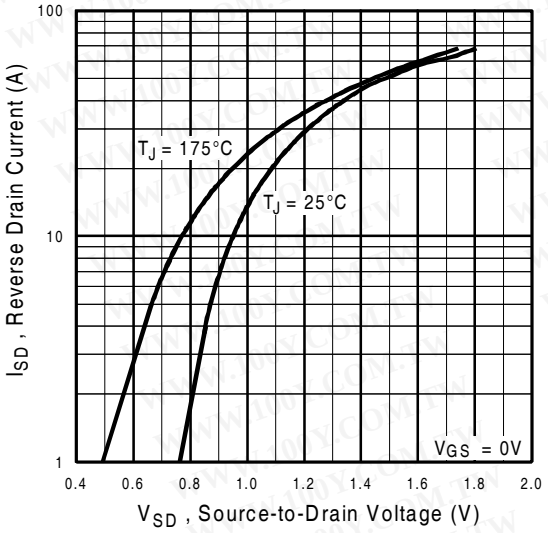

Fig 7. Typical Source-Drain Diode Forward Voltage

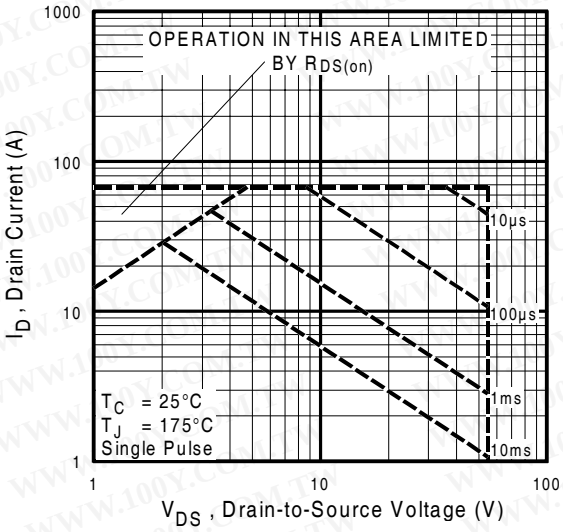

Fig 8. Maximum Safe Operating Area

勝 特 力 材 料 886-3-5753170
胜特力电子(上海) 86-21-34970699
胜特力电子(深圳) 86-755-83298787
Http://www.100y.com.tw

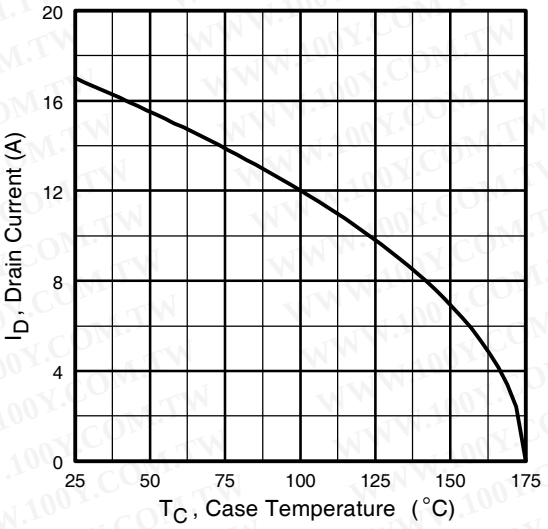

Fig 9. Maximum Drain Current Vs. Case Temperature

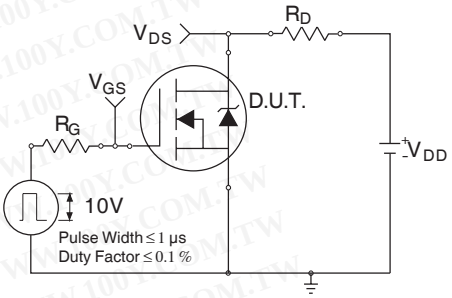

Fig 10a. Switching Time Test Circuit

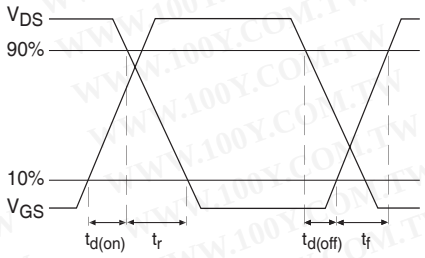

Fig 10b. Switching Time Waveforms

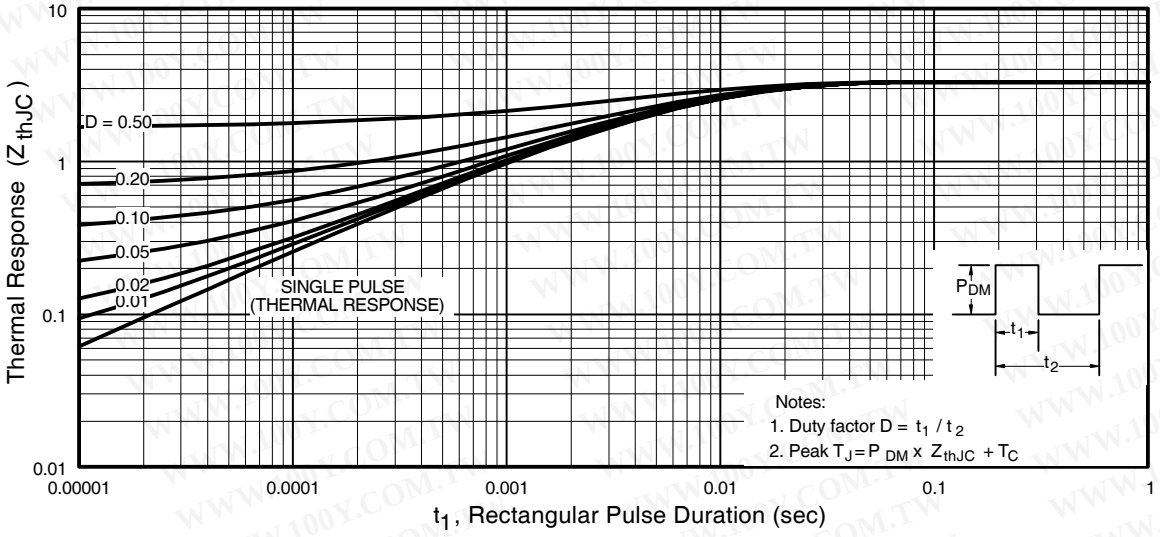

Fig 11. Maximum Effective Transient Thermal Impedance, Junction-to-Case

勝 特 力 材 料 886-3-5753170
胜特力电子(上海) 86-21-34970699
胜特力电子(深圳) 86-755-83298787
Http://www.100y.com.tw

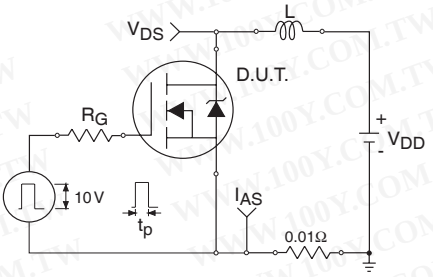

Fig 12a. Unclamped Inductive Test Circuit

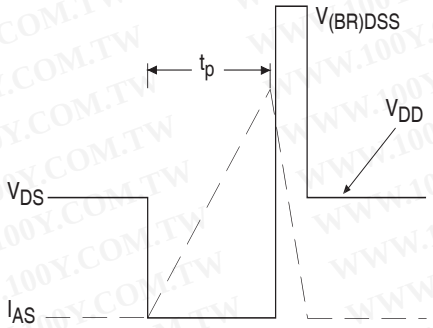

Fig 12b. Unclamped Inductive Waveforms

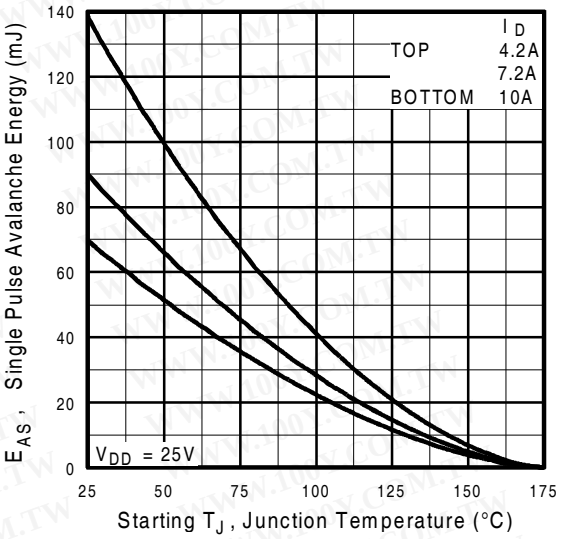

Fig 12c. Maximum Avalanche Energy Vs. Drain Current

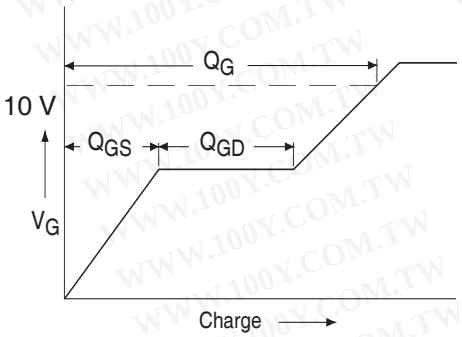

Fig 13a. Basic Gate Charge Waveform

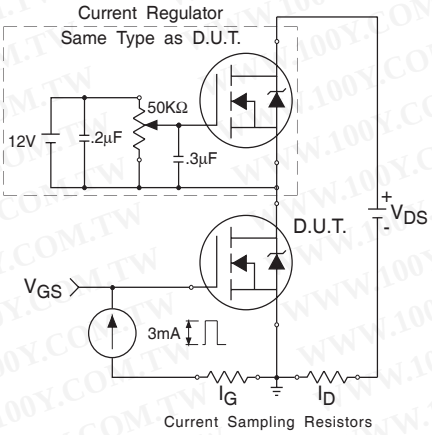

Fig 13b. Gate Charge Test Circuit

勝 特 力 材 料 886-3-5753170
胜特力电子(上海) 86-21-34970699
胜特力电子(深圳) 86-755-83298787
Http://www.100y.com.tw

Peak Diode Recovery dv/dt Test Circuit

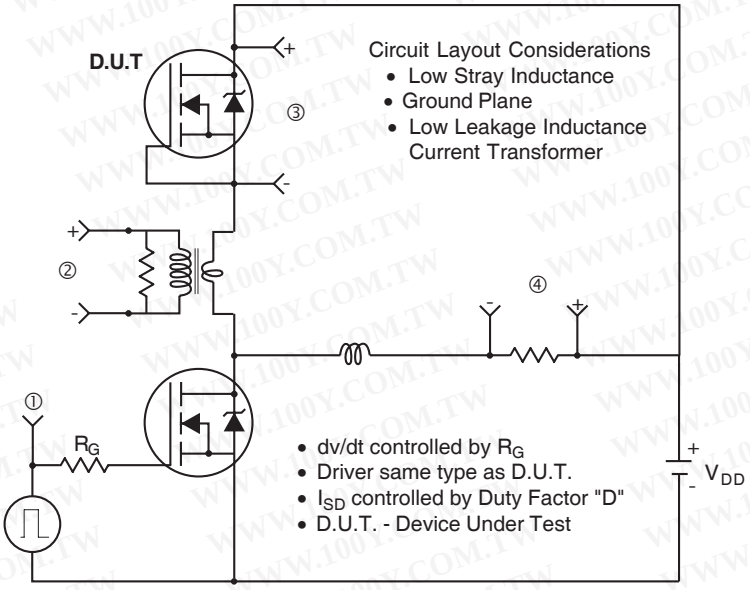

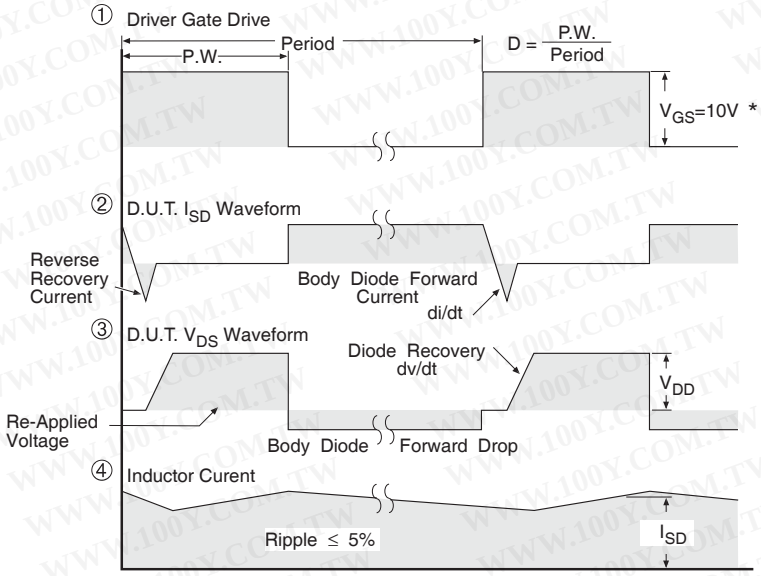

* V_{GS} = 5V for Logic Level Devices

Fig 14. For N-Channel HEXFETS

勝 特 力 材 料 886-3-5753170
胜特力电子(上海) 86-21-34970699
胜特力电子(深圳) 86-755-83298787
Http://www.100y.com.tw

International
IOR Rectifier

D²Pak Package Outline

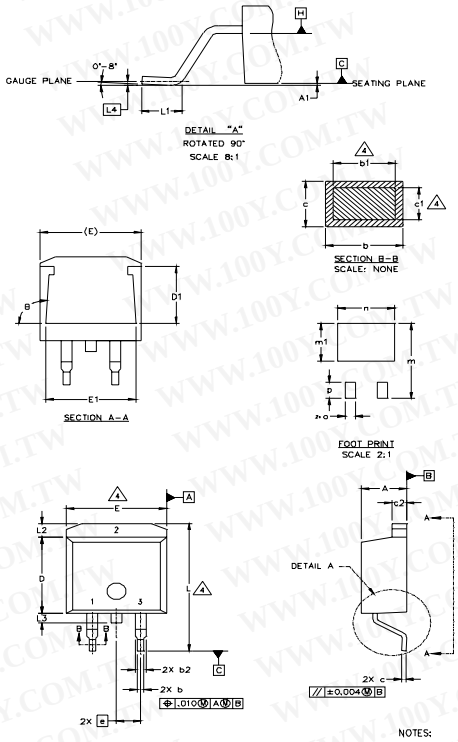

SYMBOL	DIMENSIONS				NOTES
	MILLIMETERS		INCHES		
	MIN.	MAX.	MIN.	MAX.	
A	4.06	4.83	.160	.190	
A1		0.127		.005	
b	0.51	0.99	.020	.039	
b1	0.51	0.89	.020	.035	4
b2	1.14	1.40	.045	.055	
c	0.43	0.63	.017	.025	
c1	0.38	0.74	.015	.029	4
c2	1.14	1.40	.045	.055	
D	8.51	9.65	.335	.380	3
D1	5.33		.210		
E	9.65	10.67	.380	.420	3
E1	6.22		.245		
e	2.54 BSC		.100 BSC		
L	14.61	15.88	.575	.625	
L1	1.78	2.79	.070	.110	
L2		1.65		.065	
L3	1.27	1.78	.050	.070	
L4	0.25 BSC		.010 BSC		
m	17.78		.700		
m1	8.89		.350		
n	11.43		.450		
o	2.08		.082		
p	3.81		.150		
θ	90°	93°	90°	93°	

LEAD ASSIGNMENTS

HEXFET	IGBTs, CoPACK	DIODES
1.– GATE	1.– GATE	1.– ANODE *
2.– DRAIN	2.– COLLECTOR	2.– CATHODE
3.– SOURCE	3.– EMITTER	3.– ANODE

* PART DEPENDENT.

NOTES:
1. DIMENSIONING AND TOLERANCING PER ASME Y14.5M-1994
2. DIMENSIONS ARE SHOWN IN MILLIMETERS [INCHES].
3. DIMENSION D & E DO NOT INCLUDE MOLD FLASH. MOLD FLASH SHALL NOT EXCEED 0.127 [.005"] PER SIDE. THESE DIMENSIONS ARE MEASURED AT THE OUTMOST EXTREMES OF THE PLASTIC BODY.
4. DIMENSION b1 AND c1 APPLY TO BASE METAL ONLY.
5. CONTROLLING DIMENSION: INCH.

D²Pak Part Marking Information (Lead-Free)

EXAMPLE: THIS IS AN IRF530S WITH
LOT CODE 8024
ASSEMBLED ON WW 02, 2000
IN THE ASSEMBLY LINE "L"

Note: "P" in assembly line position indicates "Lead-Free"

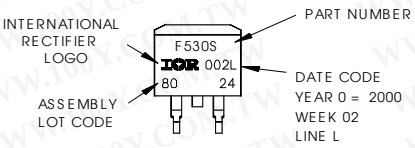

OR

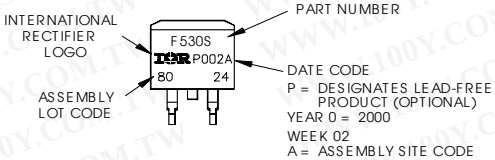

勝 特 力 材 料 886-3-5753170
胜特力电子(上海) 86-21-34970699
胜特力电子(深圳) 86-755-83298787
Http://www.100y.com.tw

TO-262 Package Outline

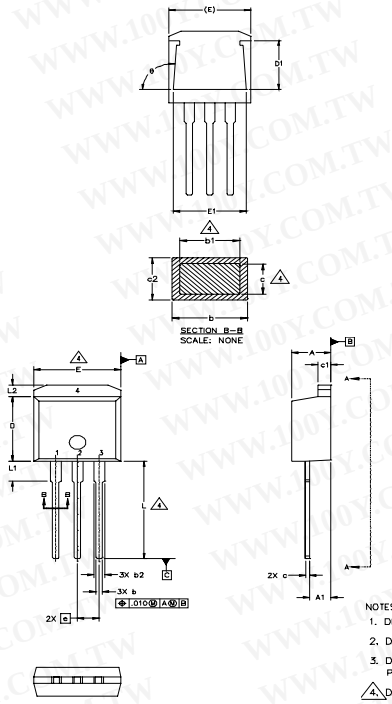

SYMBOL	DIMENSIONS				NOTES
	MILLIMETERS		INCHES		
	MIN.	MAX.	MIN.	MAX.	
A	4.06	4.83	.160	.190	
A1	2.03	2.92	.080	.115	
b	0.51	0.99	.020	.039	
b1	0.51	0.89	.020	.035	4
b2	1.14	1.40	.045	.055	
c	0.38	0.63	.015	.025	4
c1	1.14	1.40	.045	.055	
c2	0.43	.063	.017	.029	
D	8.51	9.65	.335	.380	3
D1	5.33		.210		
E	9.65	10.67	.380	.420	3
E1	6.22		.245		
e	2.54 BSC		.100 BSC		
L	13.46	14.09	.530	.555	
L1	3.56	3.71	.140	.146	
L2		1.65		.065	

LEAD ASSIGNMENTS

HEXFET	IGBT
1.– GATE	1 – GATE
2.– DRAIN	2 – COLLECTOR
3.– SOURCE	3 – EMITTER
4.– DRAIN	

NOTES:
1. DIMENSIONING AND TOLERANCING PER ASME Y14.5M-1994
2. DIMENSIONS ARE SHOWN IN MILLIMETERS [INCHES].
3. DIMENSION D & E DO NOT INCLUDE MOLD FLASH. MOLD FLASH SHALL NOT EXCEED 0.127 [.005"] PER SIDE. THESE DIMENSIONS ARE MEASURED AT THE OUTMOST EXTREMES OF THE PLASTIC BODY.
4. DIMENSION b1 AND c1 APPLY TO BASE METAL ONLY.
5. CONTROLLING DIMENSION: INCH.

TO-262 Part Marking Information

EXAMPLE: THIS IS AN IRL3103L
LOT CODE 1789
ASSEMBLED ON WW 19, 1997
IN THE ASSEMBLY LINE "C"

Note: "P" in assembly line position indicates "Lead-Free"

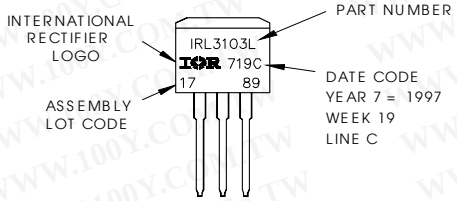

OR

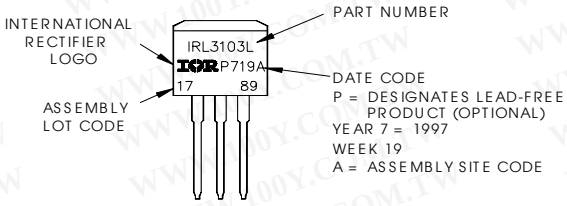

勝 特 力 材 料 886-3-5753170
胜特力电子(上海) 86-21-34970699
胜特力电子(深圳) 86-755-83298787
Http://www.100y.com.tw

IRFZ24NS/LPbF

International
IOR Rectifier

D^{2}Pak Tape & Reel Information

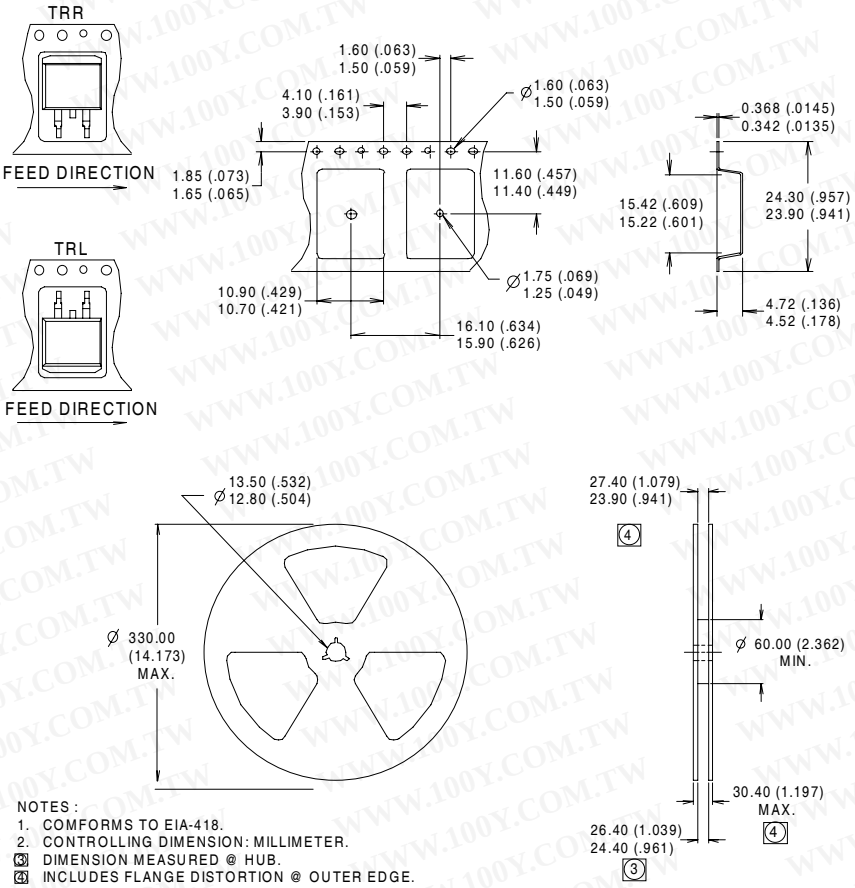

NOTES :
1. COMFORMS TO EIA-418.
2. CONTROLLING DIMENSION: MILLIMETER.
3. DIMENSION MEASURED @ HUB.
4. INCLUDES FLANGE DISTORTION @ OUTER EDGE.

Data and specifications subject to change without notice.

International
IOR Rectifier