勝 特 力 材 料 886-3-5753170
胜特力电子(上海) 86-21-34970699
胜特力电子(深圳) 86-755-83298787
Http://www.100y.com.tw

Schottky barrier diode

LRB551V-30T1

LRB551V-30T1

CASE 477– 02, STYLE 1
SOD– 323

●Applications

High-frequency rectification
Switching regulators

●Features

1) Small surface mounting type.
2) Ultra low V_F(V_F=0.45V Typ. at 0.5A)
3) High reliability.
3) Pb-Free package is available.

●Construction

Silicon epitaxial planar

●Device Marking and Ordering Information

Device	Marking	Shipping
LRB551V-30T1	D	3000/Tape&Reel
LRB551V-30T1G	D (Pb-Free)	3000/Tape&Reel

●Absolute maximum ratings (Ta = 25°C)

Parameter	Symbol	Limits	Unit
Peak reverse voltage	V_{RM}	30	V
DC reverse voltage	V_R	20	V
Mean rectifying current	I_O	0.5	A
Peak forward surge current*	I_{FSM}	2	A
Junction temperature	Tj	125	°C
Storage temperature	Tstg	–40~+125	°C

* 60Hz for 1 ∿

●Electrical characteristics (Ta = 25°C)

Parameter	Symbol	Min.	Typ.	Max.	Unit	Conditions
Forward voltage	V_{F1}	–	–	0.36	V	I_F = 100mA
	V_{F2}	–	–	0.54	V	I_F = 500mA
Reverse current	I_R	–	–	100	μA	V_R = 20V

LRB551V-30T1

●**Electrical characteristic curves** (Ta = 25°C)

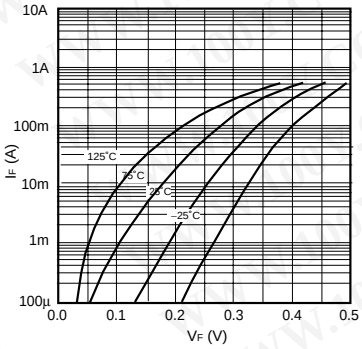

Fig.1 Forward characteristics

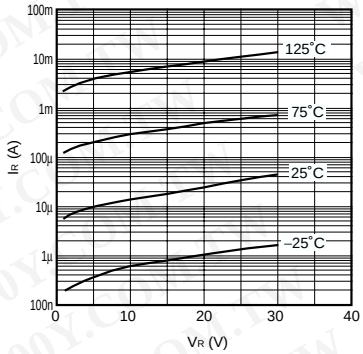

Fig.2 Reverse characteristics

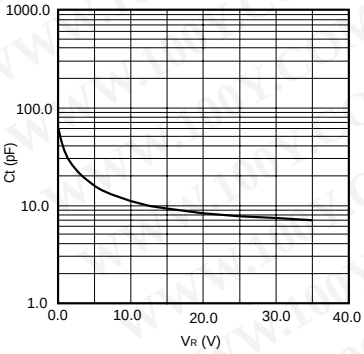

Fig.3 Capacitance between terminals characteristics

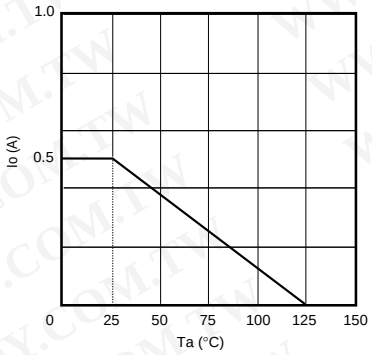

Fig.4 Derating curve

LRB551V-30T1

SOD–323

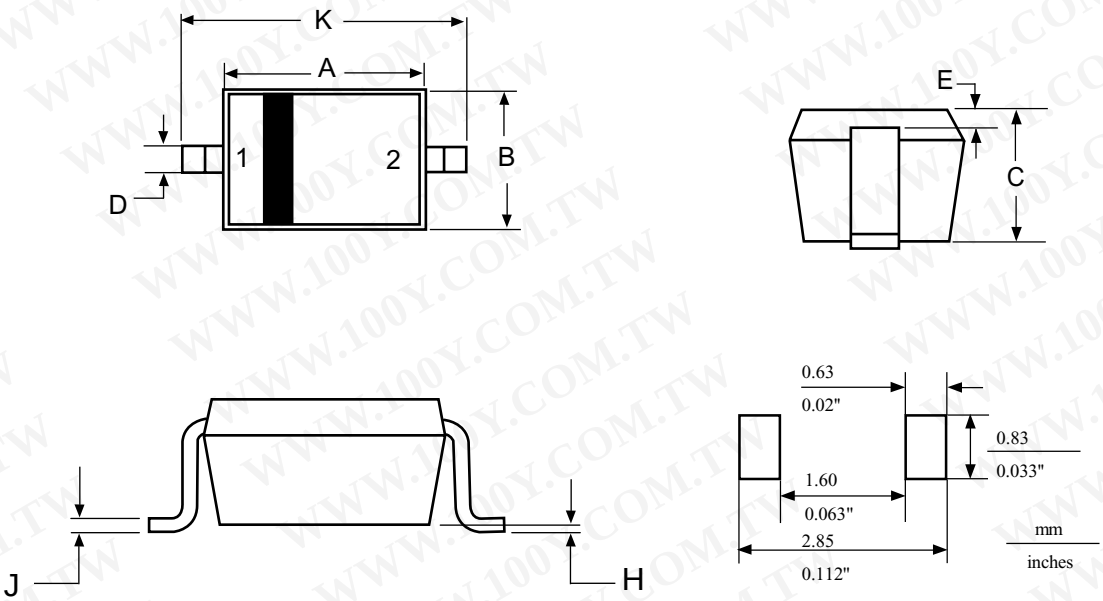

NOTES:

1. DIMENSIONING AND TOLERANCING PER ANSI Y14.5M, 1982.
2. CONTROLLING DIMENSION: MILLIMETERS

DIM	MILLIMETERS		INCHES	
	MIN	MAX	MIN	MAX
A	1.60	1.80	0.063	0.071
B	1.15	1.35	0.045	0.053
C	0.80	1.00	0.031	0.039
D	0.25	0.40	0.010	0.016
E	0.15 REF		0.006 REF	
H	0.00	0.10	0.000	0.004
J	0.089	0.177	0.0035	0.0070
K	2.30	2.70	0.091	0.106

PIN: 1. CATHODE
2. ANODE