# MOTOROLA Semiconductors

# 2N3668 thru 2N3670
# 2N4103

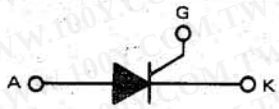


**THYRISTORS**

**12.5 AMPERES RMS**
**100-600 VOLTS**

## SILICON CONTROLLED RECTIFIERS

These devices are designed for 12.5 Ampere RMS, 100 through 600 Volt power supply and computer control applications to 100°C maximum Junction Temperature.

- Low Forward "On" Voltage — $V_{TM}$ = 1.8 Volts (Max) @ $T_J$ = 25°C
- All Diffused Junctions for Greater Parameter Uniformity
- Glass Passivated for Greater Stability


勝 特 力 材 料 886-3-5753170
胜特力电子(上海) 86-21-34970699
胜特力电子(深圳) 86-755-83298787
Http://www.100y.com.tw


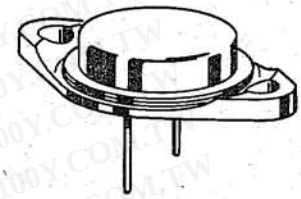

### *MAXIMUM RATINGS

| Rating | Symbol | Value | Unit |
|---|---|---|---|
| Peak Reverse Blocking Voltage (1) | $V_{RRM}$ | | Volts |
| 2N3668 | | 100 | |
| 2N3669 | | 200 | |
| 2N3670 | | 400 | |
| 2N4103 | | 600 | |
| Peak Forward Gate Voltage | $V_{GF}$ | 10 | Volts |
| Peak Reverse Gate Voltage | $V_{GR}$ | 5.0 | Volts |
| Forward Current RMS ($T_C$ = 80°C) (All Conduction Angles) | $I_{T(RMS)}$ | 12.5 | Amps |
| Peak Forward Surge Current (1/2 cycle, Sine Wave, 60 Hz, $T_J$ = −40 to 100°C) | $I_{TSM}$ | 200 | Amps |
| Circuit Fusing Considerations ($T_J$ = −40 to +100°C, t = 1.0 to 8.3 ms) | $I^2t$ | 166 | $A^2s$ |
| Forward Peak Gate Power | $P_{GM}$ | 5.0 | Watts |
| Forward Average Gate Power | $P_{G(AV)}$ | 0.5 | Watt |
| Forward Peak Gate Current | $I_{GM}$ | 2.0 | Amps |
| Operating Junction Temperature Range | $T_J$ | −40 to +100 | °C |
| Storage Temperature Range | $T_{stg}$ | −40 to +125 | °C |

### THERMAL CHARACTERISTICS

| Characteristic | Symbol | Max | Unit |
|---|---|---|---|
| Thermal Resistance, Junction to Case | $R_{\theta JC}$ | 1.7 | °C/W |

(1) $V_{RRM}$ for all types can be applied on a continuous dc basis without incurrent damage. Ratings apply for zero or negative gate voltage. Devices should not be tested for blocking capability in a manner such that the voltage supplied exceeds the rated blocking voltage.

*Indicates JEDEC Registered Data.

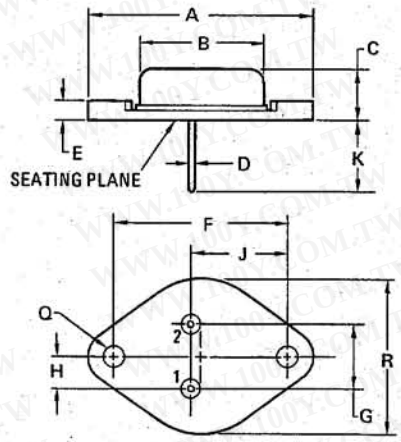


STYLE 2: (THY)
PIN 1. GATE
2. CATHODE
CASE: ANODE

| DIM* | MILLIMETERS MIN | MILLIMETERS MAX | INCHES MIN | INCHES MAX |
|---|---|---|---|---|
| A | – | 39.12 | – | 1.540 |
| B | – | 20.70 | – | 0.815 |
| C | – | 7.92 | – | 0.312 |
| D | 1.22 | 1.30 | 0.048 | 0.051 |
| E | 2.84 | 3.05 | 0.112 | 0.120 |
| F | 29.90 | 30.40 | 1.177 | 1.197 |
| G | 10.67 | 11.18 | 0.420 | 0.440 |
| H | 5.33 | 5.59 | 0.210 | 0.220 |
| J | 16.54 | 16.79 | 0.651 | 0.661 |
| K | 8.13 | 10.67 | 0.320 | 0.420 |
| Q | 3.84 | 4.09 | 0.151 | 0.161 |
| R | – | 26.16 | – | 1.030 |

CASE 54-05

©MOTOROLA INC., 1976

**ELECTRICAL CHARACTERISTICS** ($T_C$ = 25°C unless otherwise noted.)

| Characteristic | | Symbol | Min | Typ | Max | Unit |
|---|---|---|---|---|---|---|
| *Peak Forward Blocking Voltage ($T_J$ = 100°C) | | $V_{DRM}$ | | | | Volts |
| | 2N3668 | | 100 | – | – | |
| | 2N3669 | | 200 | – | – | |
| | 2N3670 | | 400 | – | – | |
| | 2N4103 | | 600 | – | – | |
| *Peak Forward Blocking Current (Rated $V_{DRM}$ @ $T_J$ = 100°C) | | $I_{DRM}$ | | | | mA |
| | 2N3668 | | – | – | 2.0 | |
| | 2N3669 | | – | – | 2.5 | |
| | 2N3670 | | – | – | 3.0 | |
| | 2N4103 | | – | – | 4.0 | |
| *Peak Reverse Blocking Current (Rated $V_{RRM}$ @ $T_J$ = 100°C) | | $I_{RRM}$ | | | | mA |
| | 2N3668 | | – | – | 1.0 | |
| | 2N3669 | | – | – | 1.25 | |
| | 2N3670 | | – | – | 1.5 | |
| | 2N4103 | | – | – | 2.0 | |
| *Forward "On" Voltage (1) ($I_{TM}$ = 25 A peak) | | $V_{TM}$ | – | – | 1.8 | Volts |
| *Gate Trigger Current (Continuous dc) (Anode Voltage = 12 Vdc, $R_L$ = 24 Ohms) | ($T_J$ = 25°C) | $I_{GT}$ | – | – | 40 | mA |
| | ($T_J$ = –40°C)* | | – | – | 80 | |
| *Gate Trigger Voltage (Continuous dc) (Anode Voltage = 12 Vdc, $R_L$ = 24 Ohms) | | $V_{GT}$ | | | | Volts |
| | ($T_J$ = –40°C)* | | – | 1.0 | 3.0 | |
| | ($T_J$ = +25°C) | | – | – | 2.0 | |
| | ($T_J$ = +100°C) | | 0.3 | – | – | |
| Holding Current (Anode Voltage = 12 Vdc) | | $I_H$ | – | 20 | – | mA |
| Turn-On Time | | $t_{gt}$ | – | 0.5 | – | μs |
| Turn-Off Time ($V_{DRM}$ = rated voltage) | | $t_q$ | – | 50 | – | μs |
| Forward Voltage Application Rate | | dv/dt | – | 30 | – | V/μs |

*Indicates JEDEC Registered Data.

(1) Pulse Test: Pulse Width ≤ 1.0 ms, Duty Cycle ≤ 1.0%.

勝 特 力 材 料 886-3-5753170
胜特力电子(上海) 86-21-34970699
胜特力电子(深圳) 86-755-83298787
Http://www.100y.com.tw

**FIGURE 1 – CURRENT DERATING**

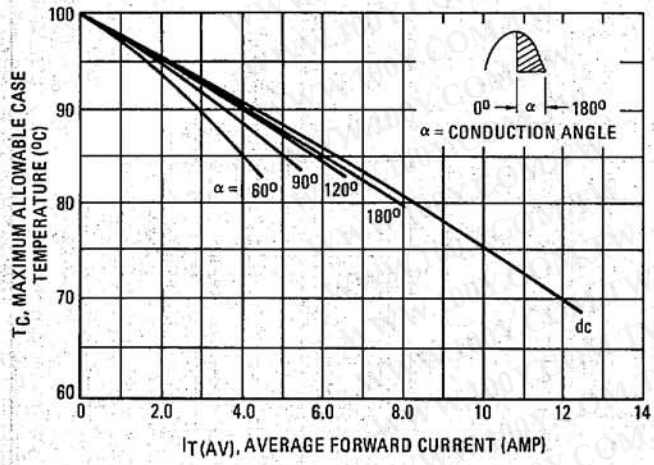

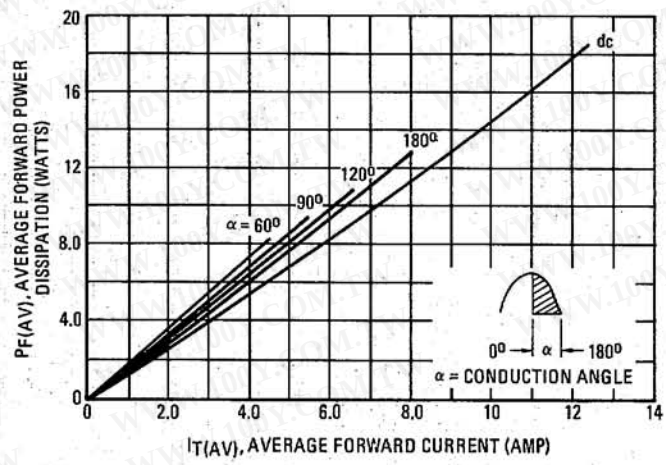
**FIGURE 2 – MAXIMUM POWER DISSIPATION**