勝 特 力 材 料 886-3-5753170
胜特力电子(上海) 86-21-34970699
胜特力电子(深圳) 86-755-83298787
Http://www.100y.com.tw

STB70N10F4, STD70N10F4 STP70N10F4, STW70N10F4

N-channel 100 V, 0.015 Ω, 60 A, STripFET™ DeepGATE™ Power MOSFET in TO-220, DPAK, TO-247, D²PAK

Features

Type	V_{DSS}	$R_{DS(on)}$ max	I_D
STB70N10F4	100 V	< 0.0195 Ω	65 A
STD70N10F4	100 V	< 0.0195 Ω	60 A
STP70N10F4	100 V	< 0.0195 Ω	65 A
STW70N10F4	100 V	< 0.0195 Ω	65 A

- Exceptional dv/dt capability
- Extremely low on-resistance $R_{DS(on)}$
- 100% avalanche tested

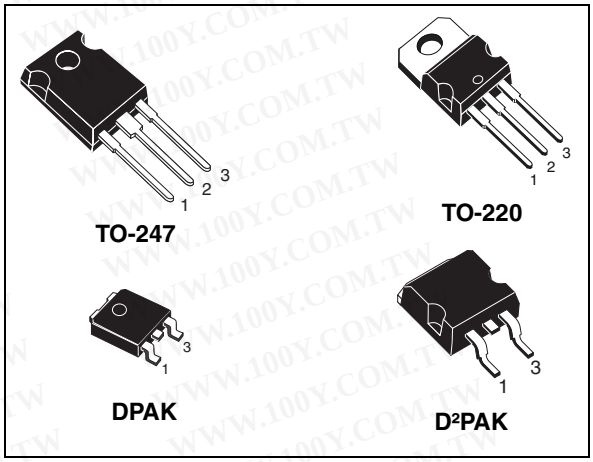

Application

- Switching applications

Description

This STripFET™ DeepGATE™ Power MOSFET technology is among the latest improvements, which have been especially tailored to minimize on-state resistance, with a new gate structure, providing superior switching performance.

Figure 1. Internal schematic diagram

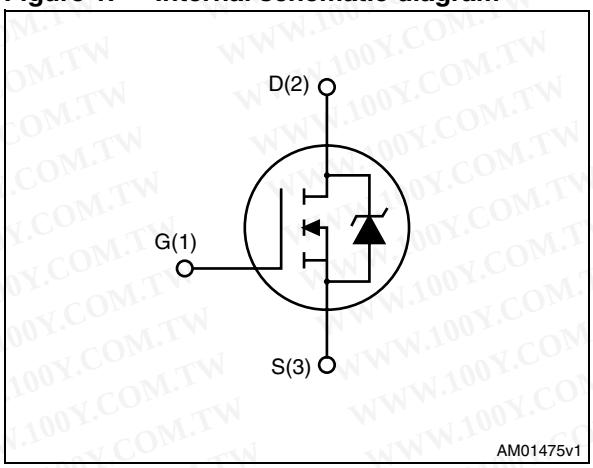

Table 1. Device summary

Order codes	Marking	Package	Packaging
STB70N10F4	70N10F4	D²PAK	Tape and reel
STD70N10F4	70N10F4	DPAK	Tape and reel
STP70N10F4	70N10F4	TO-220	Tube
STW70N10F4	70N10F4	TO-247	Tube

Contents

1 Electrical ratings 3

2 Electrical characteristics 4

2.1 Electrical characteristics (curves) 6

3 Test circuits 9

4 Package mechanical data 10

5 Packaging mechanical data 15

6 Revision history 17

WWW.100Y.COM.TW

1 Electrical ratings

Table 2. Absolute maximum ratings

Symbol	Parameter	Value		Unit
		TO-220, TO-247, D²PAK	DPAK	
V_{DS}	Drain-source voltage (V_{GS} = 0)	100		V
V_{GS}	Gate-source voltage	± 20		V
I_D	Drain current (continuous) at T_C = 25 °C	65	60	A
I_D	Drain current (continuous) at T_C = 100 °C	46	43	A
I_{DM} (1)	Drain current (pulsed)	260	240	A
P_{TOT}	Total dissipation at T_C = 25 °C	150	125	W
	Derating factor	1	0.83	W/°C
E_{AS} (2)	Single pulse avalanche energy	120		mJ
T_{stg}	Storage temperature	– 55 to 175		°C
T_j	Max. operating junction temperature			

1. Pulse width limited by safe operating area
2. Starting T_j = 25 °C, I_D= 32.5 A, V_{DD}= 45 V

Table 3. Thermal data

Symbol	Parameter	Value		Unit
		TO-220, TO-247, D²PAK	DPAK	
$R_{thj-case}$	Thermal resistance junction-case max	1	1.2	°C/W
R_{thj-a}	Thermal resistance junction-ambient max	62.5	50 (1)	°C/W
T_l	Maximum lead temperature for soldering purpose	300		°C

1. When mounted on FR-4 board of 1 inch², 2 oz Cu

2 Electrical characteristics

(T_{CASE} = 25 °C unless otherwise specified)

Table 4. On/off states

Symbol	Parameter	Test conditions	Min.	Typ.	Max.	Unit
$V_{(BR)DSS}$	Drain-source Breakdown voltage	I_D = 250 µA, V_{GS} = 0	100			V
I_{DSS}	Zero gate voltage Drain current (V_{GS} = 0)	V_{DS} = max rating V_{DS} = max rating,T_C=125 °C			1 100	µA µA
I_{GSS}	Gate-body leakage current (V_{DS} = 0)	V_{GS} = ± 20 V			100	nA
$V_{GS(th)}$	Gate threshold voltage	V_{DS} = V_{GS}, I_D = 250 µA	2		4	V
$R_{DS(on)}$	Static drain-source on resistance	V_{GS} = 10 V, I_D = 30 A		0.015	0.0195	Ω

Table 5. Dynamic

Symbol	Parameter	Test conditions	Min.	Typ.	Max.	Unit
C_{iss}	Input capacitance	V_{DS} = 25 V, f = 1 MHz, V_{GS} = 0	-	5800	-	pF
C_{oss}	Output capacitance			300		pF
C_{rss}	Reverse transfer capacitance			190		pF
Q_g	Total gate charge	V_{DD} = 80 V, I_D = 65 A, V_{GS} = 10 V *(see Figure 16)*	-	85	-	nC
Q_{gs}	Gate-source charge			20		nC
Q_{gd}	Gate-drain charge			25		nC

Table 6. Switching times

Symbol	Parameter	Test conditions	Min.	Typ.	Max.	Unit
$t_{d(on)}$ t_r	Turn-on delay time Rise time	V_{DD} = 50 V, I_D = 30 A R_G = 4.7 Ω V_{GS} = 10 V *(see Figure 15)*	-	30 20	-	ns ns
$t_{d(off)}$ t_f	Turn-off-delay time Fall time	V_{DD} = 50 V, I_D = 30 A, R_G = 4.7 Ω, V_{GS} = 10 V *(see Figure 15)*	-	65 20	-	ns ns

Table 7. Source drain diode

Symbol	Parameter	Test conditions	Min.	Typ.	Max	Unit
I_{SD} I_{SDM} (1)	Source-drain current Source-drain current (pulsed)		-		60 240	A A
V_{SD} (2)	Forward on voltage	I_{SD} = 60 A, V_{GS} = 0	-		1.5	V
t_{rr} Q_{rr} I_{RRM}	Reverse recovery time Reverse recovery charge Reverse recovery current	I_{SD} = 60 A, V_{DD} = 25 V di/dt = 100 A/µs, T_j = 150 °C *(see Figure 17)*	-	80 280 6.7		ns nC A

1. Pulse width limited by safe operating area.
2. Pulsed: Pulse duration = 300 µs, duty cycle 1.5%

2.1 Electrical characteristics (curves)

Figure 2. Safe operating area for TO-220, TO-247, D²PAK

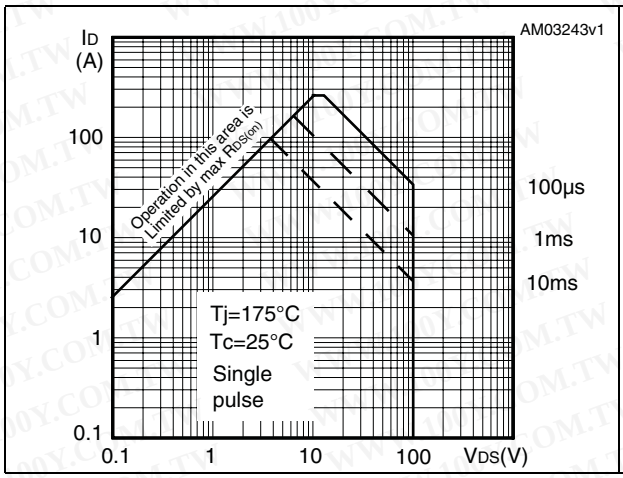

Figure 3. Thermal impedance for TO-220, TO-247, D²PAK

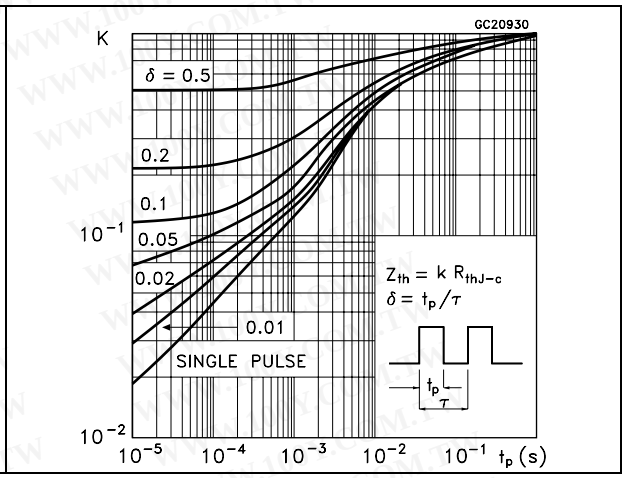

Figure 4. Safe operating area for DPAK

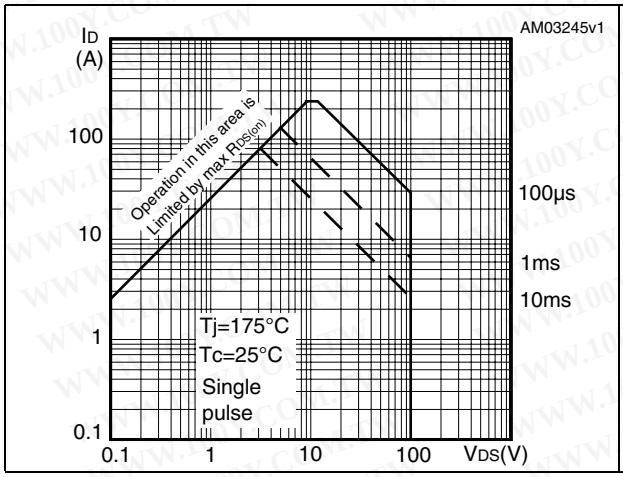

Figure 5. Thermal impedance for DPAK

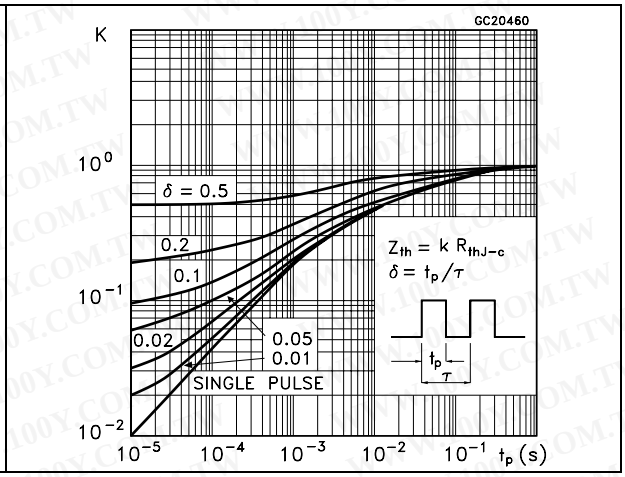

Figure 6. Output characteristics

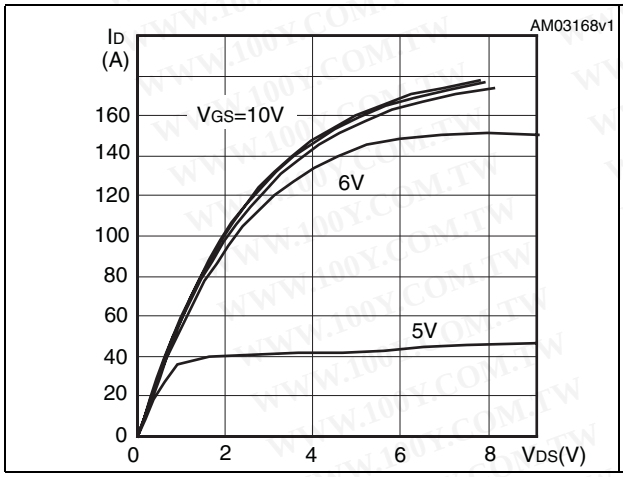

Figure 7. Transfer characteristics

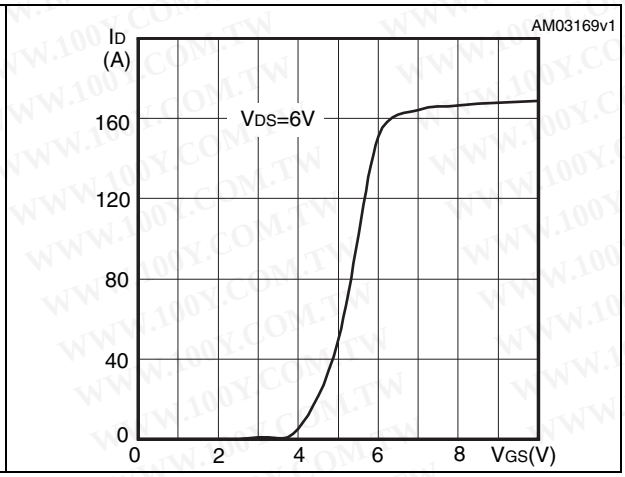

Figure 8. Normalized B_{VDSS} vs temperature

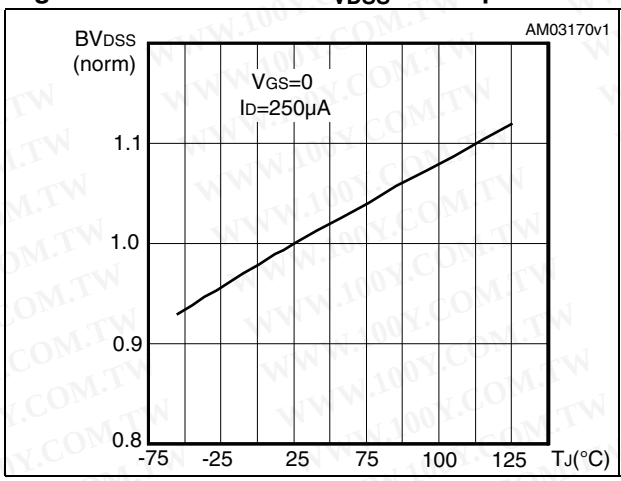

Figure 9. Static drain-source on resistance

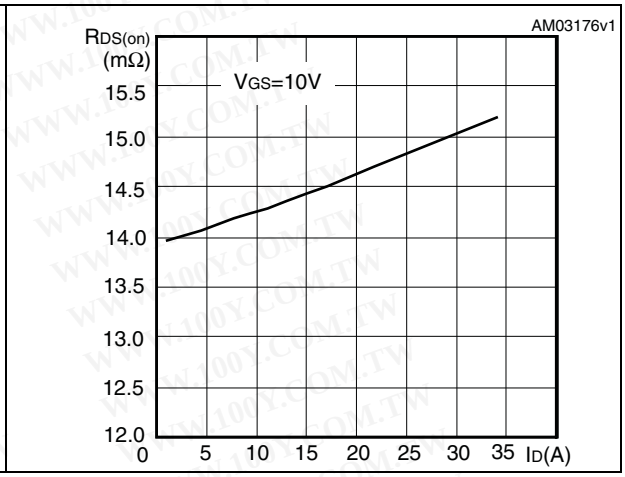

Figure 10. Gate charge vs gate-source voltage

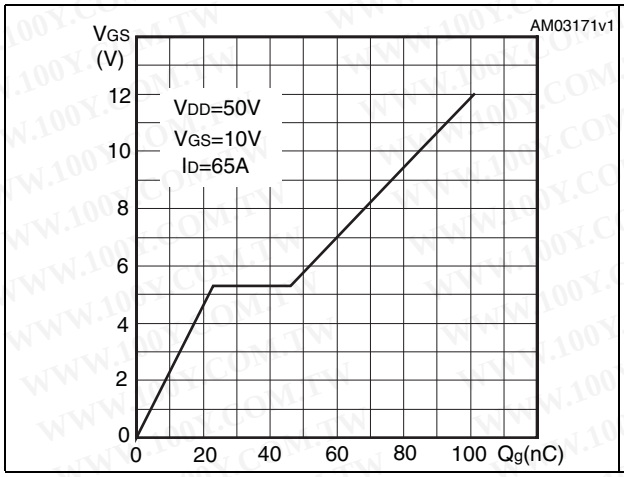

Figure 11. Capacitance variations

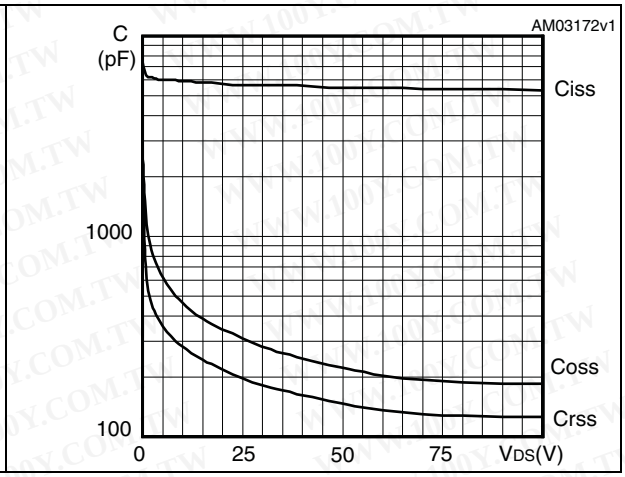

Figure 12. Normalized gate threshold voltage vs temperature

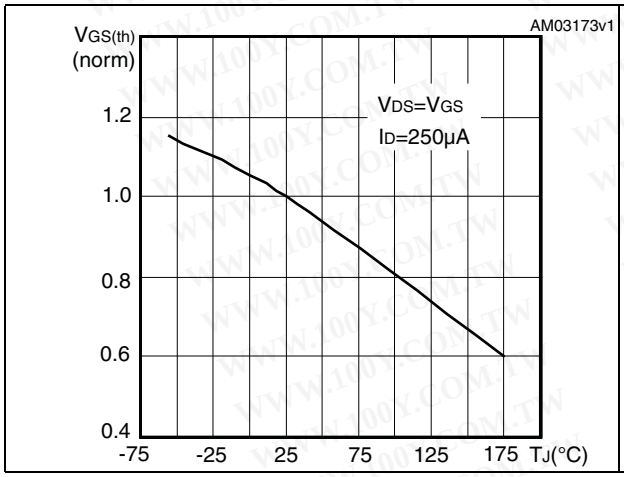

Figure 13. Normalized on resistance vs temperature

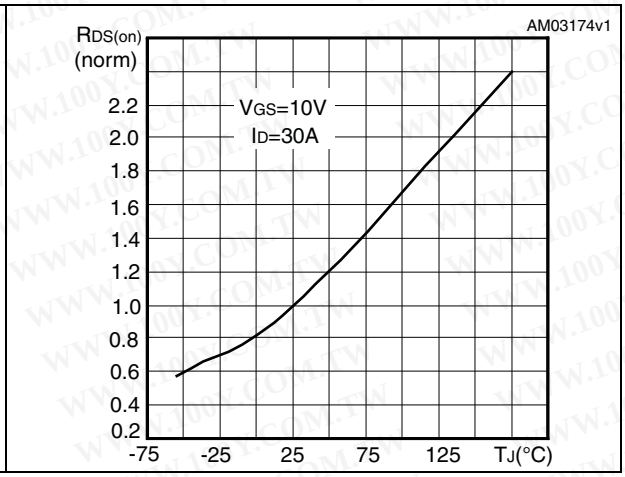

Figure 14. Source-drain diode forward characteristics

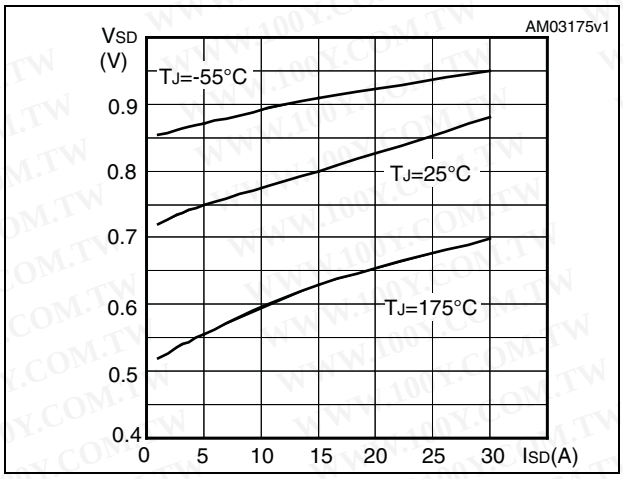

3 Test circuits

Figure 15. Switching times test circuit for resistive load

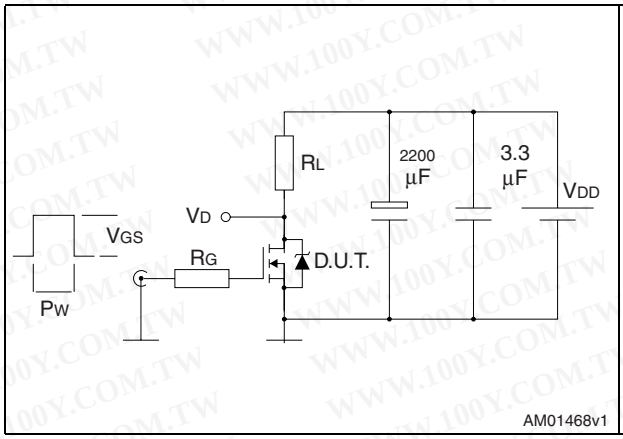

Figure 16. Gate charge test circuit

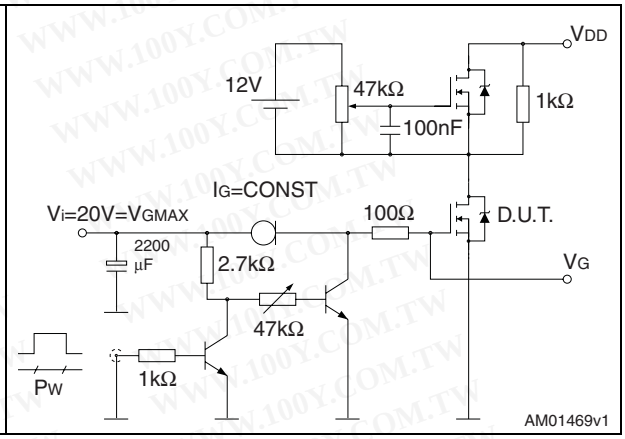

Figure 17. Test circuit for inductive load switching and diode recovery times

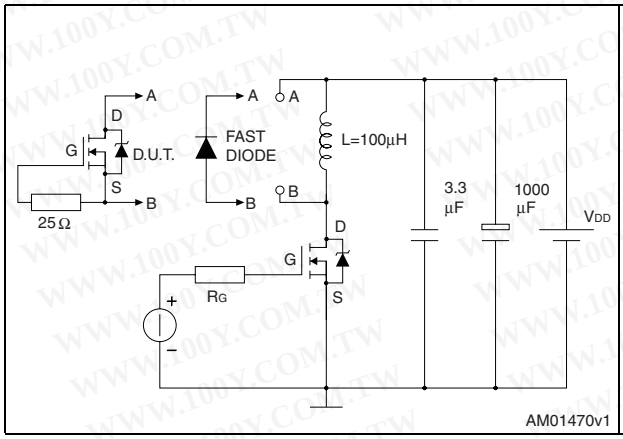

Figure 18. Unclamped inductive load test circuit

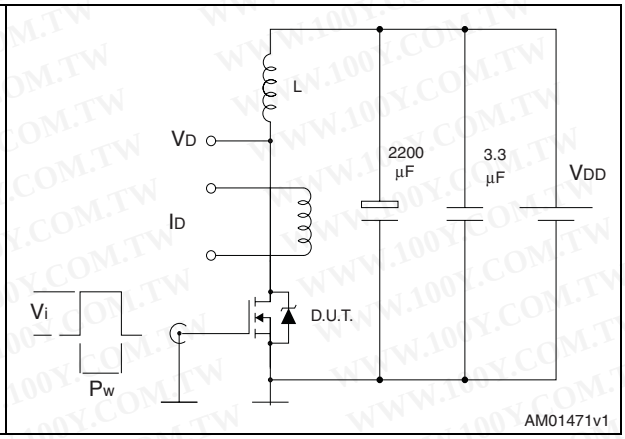

Figure 19. Unclamped inductive waveform

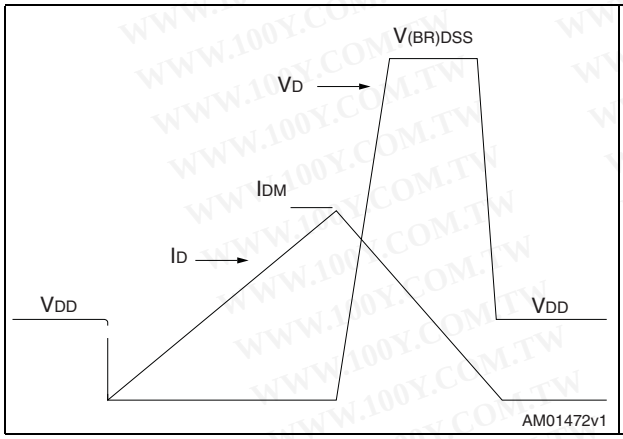

Figure 20. Switching time waveform

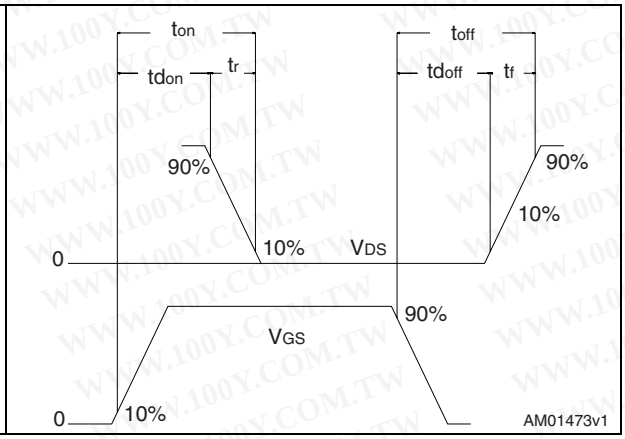

4 Package mechanical data

In order to meet environmental requirements, ST offers these devices in different grades of ECOPACK® packages, depending on their level of environmental compliance. ECOPACK® specifications, grade definitions and product status are available at: www.st.com. ECOPACK is an ST trademark.

TO-220 type A mechanical data

Dim	mm		
	Min	Typ	Max
A	4.40		4.60
b	0.61		0.88
b1	1.14		1.70
c	0.48		0.70
D	15.25		15.75
D1		1.27	
E	10		10.40
e	2.40		2.70
e1	4.95		5.15
F	1.23		1.32
H1	6.20		6.60
J1	2.40		2.72
L	13		14
L1	3.50		3.93
L20		16.40	
L30		28.90	
∅P	3.75		3.85
Q	2.65		2.95

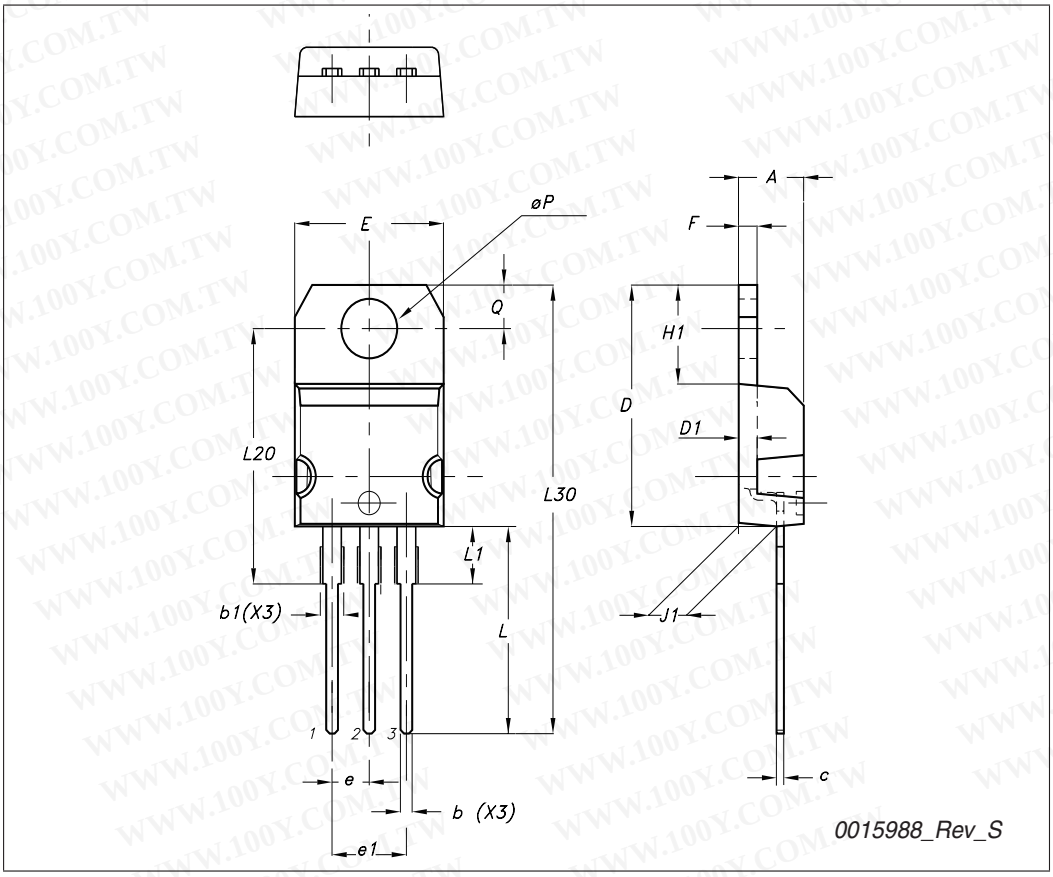

TO-252 (DPAK) mechanical data

DIM.	mm.		
	min.	typ	max.
A	2.20		2.40
A1	0.90		1.10
A2	0.03		0.23
b	0.64		0.90
b4	5.20		5.40
c	0.45		0.60
c2	0.48		0.60
D	6.00		6.20
D1		5.10	
E	6.40		6.60
E1		4.70	
e		2.28	
e1	4.40		4.60
H	9.35		10.10
L	1		
L1		2.80	
L2		0.80	
L4	0.60		1
R		0.20	
V2	0 °		8 °

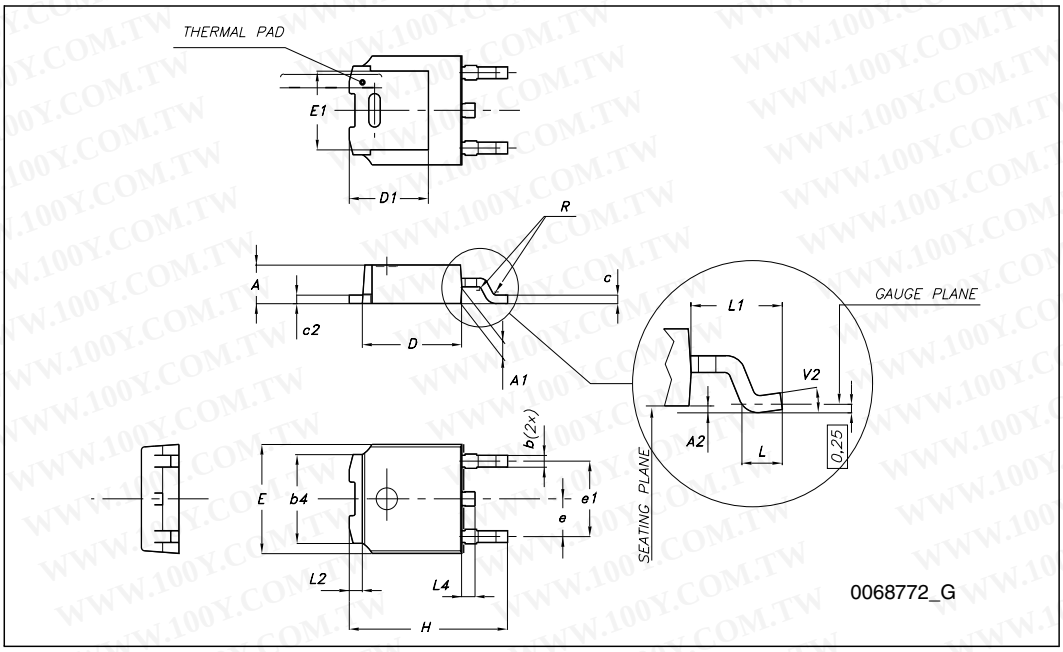

TO-247 Mechanical data

Dim.	mm.		
	Min.	Typ	Max.
A	4.85		5.15
A1	2.20		2.60
b	1.0		1.40
b1	2.0		2.40
b2	3.0		3.40
c	0.40		0.80
D	19.85		20.15
E	15.45		15.75
e		5.45	
L	14.20		14.80
L1	3.70		4.30
L2		18.50	
øP	3.55		3.65
øR	4.50		5.50
S		5.50	

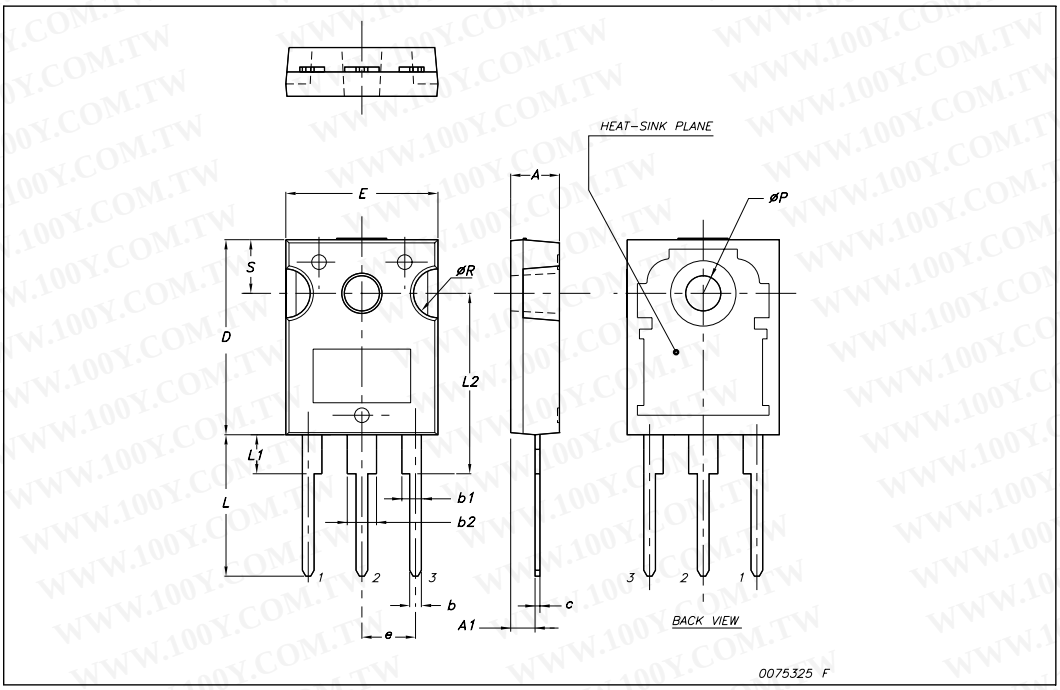

D²PAK (TO-263) mechanical data

Dim	mm			inch		
	Min	Typ	Max	Min	Typ	Max
A	4.40		4.60	0.173		0.181
A1	0.03		0.23	0.001		0.009
b	0.70		0.93	0.027		0.037
b2	1.14		1.70	0.045		0.067
c	0.45		0.60	0.017		0.024
c2	1.23		1.36	0.048		0.053
D	8.95		9.35	0.352		0.368
D1	7.50			0.295		
E	10		10.40	0.394		0.409
E1	8.50			0.334		
e		2.54			0.1	
e1	4.88		5.28	0.192		0.208
H	15		15.85	0.590		0.624
J1	2.49		2.69	0.099		0.106
L	2.29		2.79	0.090		0.110
L1	1.27		1.40	0.05		0.055
L2	1.30		1.75	0.051		0.069
R		0.4			0.016	
V2	0°		8°	0°		8°

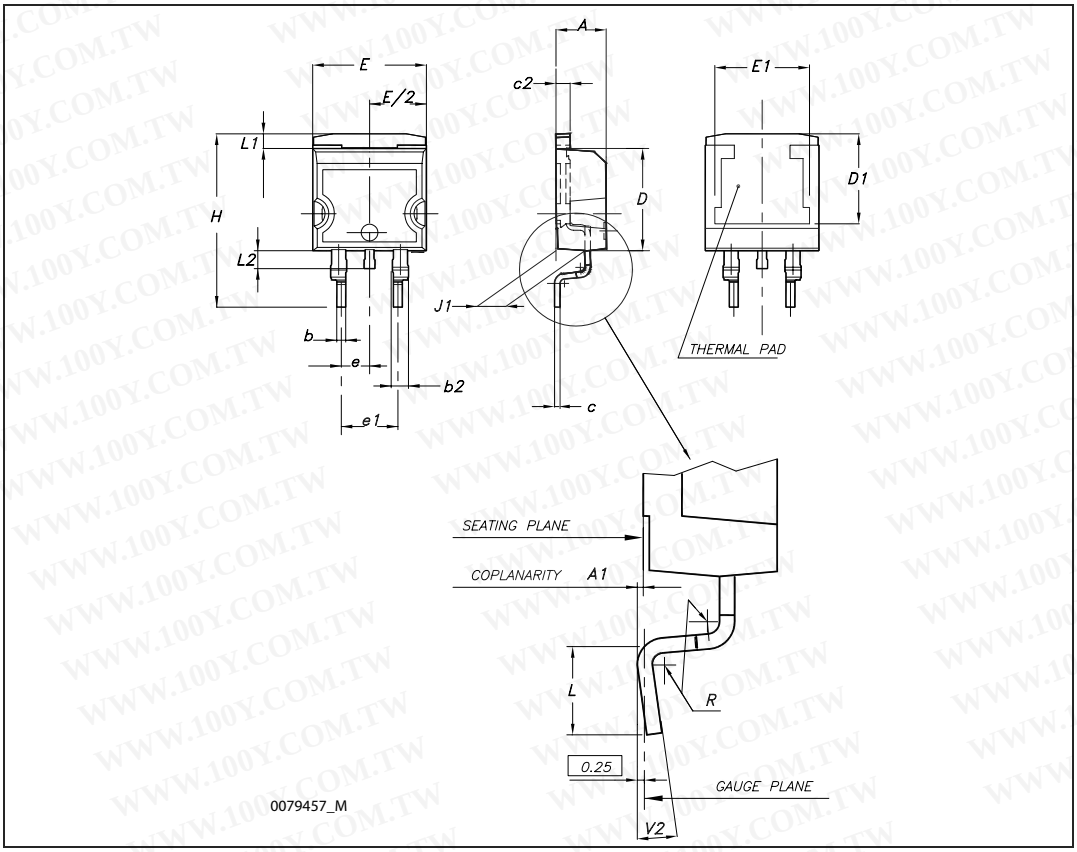

5 Packaging mechanical data

DPAK FOOTPRINT

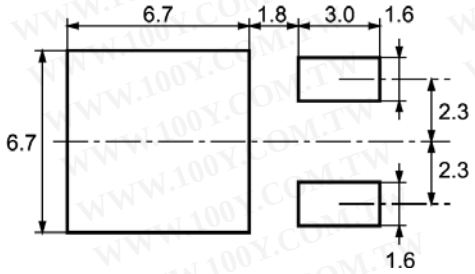

All dimensions are in millimeters

TAPE AND REEL SHIPMENT

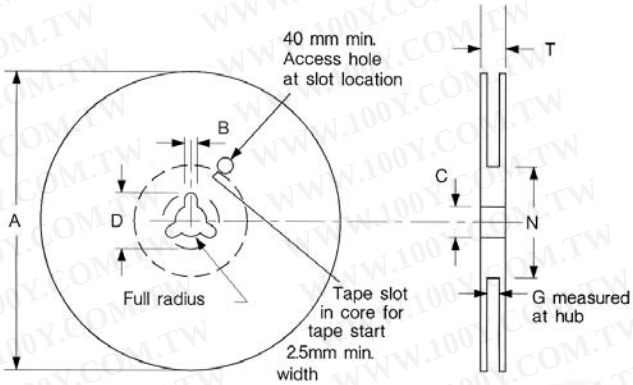

REEL MECHANICAL DATA

DIM.	mm		inch	
	MIN.	MAX.	MIN.	MAX.
A		330		12.992
B	1.5		0.059	
C	12.8	13.2	0.504	0.520
D	20.2		0.795	
G	16.4	18.4	0.645	0.724
N	50		1.968	
T		22.4		0.881

BASE QTY	BULK QTY
2500	2500

TAPE MECHANICAL DATA

DIM.	mm		inch	
	MIN.	MAX.	MIN.	MAX.
A0	6.8	7	0.267	0.275
B0	10.4	10.6	0.409	0.417
B1		12.1		0.476
D	1.5	1.6	0.059	0.063
D1	1.5		0.059	
E	1.65	1.85	0.065	0.073
F	7.4	7.6	0.291	0.299
K0	2.55	2.75	0.100	0.108
P0	3.9	4.1	0.153	0.161
P1	7.9	8.1	0.311	0.319
P2	1.9	2.1	0.075	0.082
R	40		1.574	
W	15.7	16.3	0.618	0.641

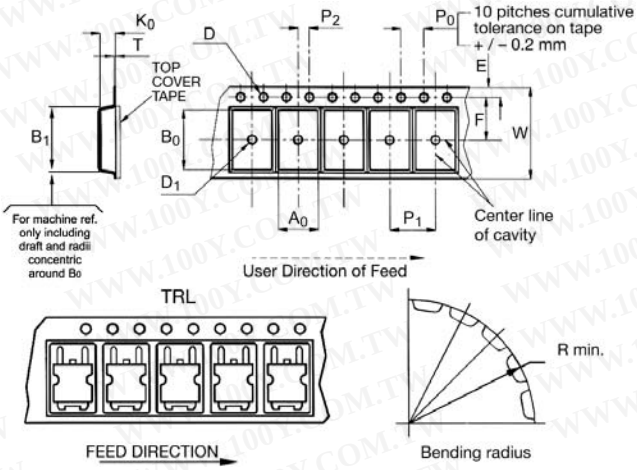

D²PAK FOOTPRINT

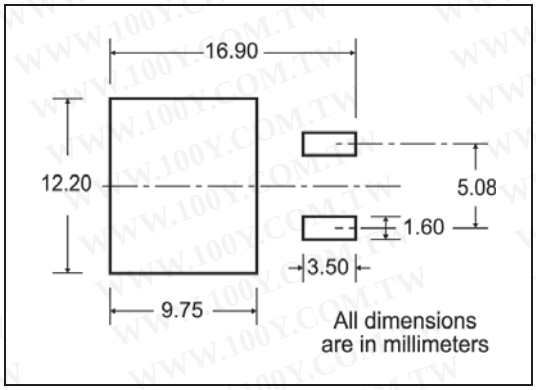

TAPE AND REEL SHIPMENT

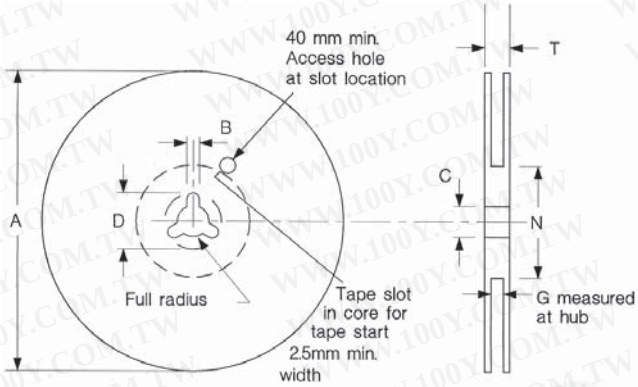

REEL MECHANICAL DATA

DIM.	mm		inch	
	MIN.	MAX.	MIN.	MAX.
A		330		12.992
B	1.5		0.059	
C	12.8	13.2	0.504	0.520
D	20.2		0795	
G	24.4	26.4	0.960	1.039
N	100		3.937	
T		30.4		1.197

BASE QTY	BULK QTY
1000	1000

TAPE MECHANICAL DATA

DIM.	mm		inch	
	MIN.	MAX.	MIN.	MAX.
A0	10.5	10.7	0.413	0.421
B0	15.7	15.9	0.618	0.626
D	1.5	1.6	0.059	0.063
D1	1.59	1.61	0.062	0.063
E	1.65	1.85	0.065	0.073
F	11.4	11.6	0.449	0.456
K0	4.8	5.0	0.189	0.197
P0	3.9	4.1	0.153	0.161
P1	11.9	12.1	0.468	0.476
P2	1.9	2.1	0.075	0.082
R	50		1.574	
T	0.25	0.35	0.0098	0.0137
W	23.7	24.3	0.933	0.956

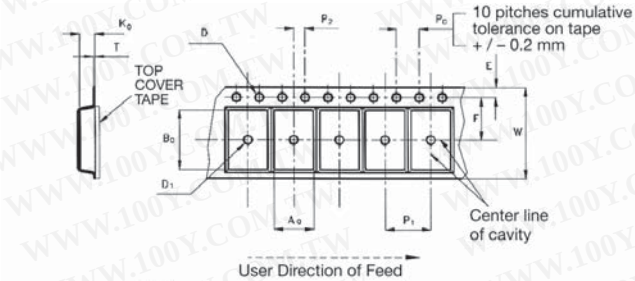

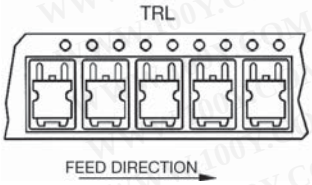

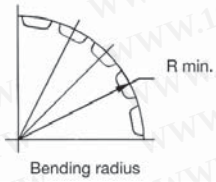

6 Revision history

Table 8. Document revision history

Date	Revision	Changes
12-Nov-2008	1	First release
14-Jan-2009	2	Added new package, mechanical data DPAK
09-Oct-2009	3	Added new package, mechanical data D²PAK

勝 特 力 材 料 886-3-5753170
胜特力电子(上海) 86-21-34970699
胜特力电子(深圳) 86-755-83298787
Http://www.100y.com.tw

Please Read Carefully:

Information in this document is provided solely in connection with ST products. STMicroelectronics NV and its subsidiaries (“ST”) reserve the right to make changes, corrections, modifications or improvements, to this document, and the products and services described herein at any time, without notice.

All ST products are sold pursuant to ST’s terms and conditions of sale.

Purchasers are solely responsible for the choice, selection and use of the ST products and services described herein, and ST assumes no liability whatsoever relating to the choice, selection or use of the ST products and services described herein.

No license, express or implied, by estoppel or otherwise, to any intellectual property rights is granted under this document. If any part of this document refers to any third party products or services it shall not be deemed a license grant by ST for the use of such third party products or services, or any intellectual property contained therein or considered as a warranty covering the use in any manner whatsoever of such third party products or services or any intellectual property contained therein.

UNLESS OTHERWISE SET FORTH IN ST’S TERMS AND CONDITIONS OF SALE ST DISCLAIMS ANY EXPRESS OR IMPLIED WARRANTY WITH RESPECT TO THE USE AND/OR SALE OF ST PRODUCTS INCLUDING WITHOUT LIMITATION IMPLIED WARRANTIES OF MERCHANTABILITY, FITNESS FOR A PARTICULAR PURPOSE (AND THEIR EQUIVALENTS UNDER THE LAWS OF ANY JURISDICTION), OR INFRINGEMENT OF ANY PATENT, COPYRIGHT OR OTHER INTELLECTUAL PROPERTY RIGHT.

UNLESS EXPRESSLY APPROVED IN WRITING BY AN AUTHORIZED ST REPRESENTATIVE, ST PRODUCTS ARE NOT RECOMMENDED, AUTHORIZED OR WARRANTED FOR USE IN MILITARY, AIR CRAFT, SPACE, LIFE SAVING, OR LIFE SUSTAINING APPLICATIONS, NOR IN PRODUCTS OR SYSTEMS WHERE FAILURE OR MALFUNCTION MAY RESULT IN PERSONAL INJURY, DEATH, OR SEVERE PROPERTY OR ENVIRONMENTAL DAMAGE. ST PRODUCTS WHICH ARE NOT SPECIFIED AS "AUTOMOTIVE GRADE" MAY ONLY BE USED IN AUTOMOTIVE APPLICATIONS AT USER’S OWN RISK.

Resale of ST products with provisions different from the statements and/or technical features set forth in this document shall immediately void any warranty granted by ST for the ST product or service described herein and shall not create or extend in any manner whatsoever, any liability of ST.

ST and the ST logo are trademarks or registered trademarks of ST in various countries.

Information in this document supersedes and replaces all information previously supplied.

The ST logo is a registered trademark of STMicroelectronics. All other names are the property of their respective owners.

© 2009 STMicroelectronics - All rights reserved

STMicroelectronics group of companies

Australia - Belgium - Brazil - Canada - China - Czech Republic - Finland - France - Germany - Hong Kong - India - Israel - Italy - Japan - Malaysia - Malta - Morocco - Philippines - Singapore - Spain - Sweden - Switzerland - United Kingdom - United States of America

www.st.com