勝 特 力 材 料 886-3-5753170
胜特力电子(上海) 86-21-34970699
胜特力电子(深圳) 86-755-83298787
Http://www.100y.com.tw

IGBT Modules
H Bridge

Short Circuit SOA Capability
Square RBSOA

I_{C25} = 125 A
V_{CES} = 1200 V
$V_{CE(sat)\,typ.}$ = 3.3 V

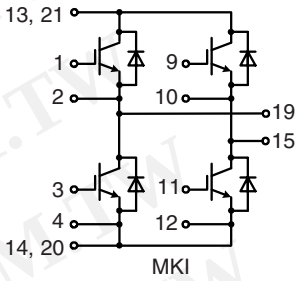

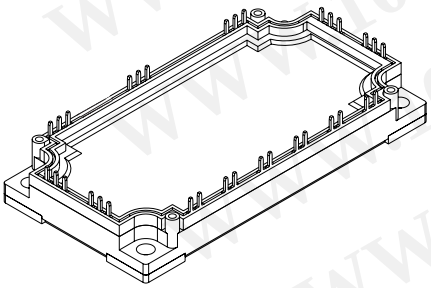

IGBTs

Symbol	Conditions	Maximum Ratings	
V_{CES}	T_{VJ} = 25°C to 150°C	1200	V
V_{GES}		± 20	V
I_{C25}	T_C = 25°C	125	A
I_{C80}	T_C = 80°C	85	A
I_{CM}	V_{GE} = ±15 V; R_G = 5.6 Ω; T_{VJ} = 125°C	200	A
V_{CEK}	RBSOA; clamped inductive load; L = 100 µH	V_{CES}	
t_{SC}	V_{CE} = 900 V; V_{GE} = ±15 V; R_G = 5.6 Ω; T_{VJ} = 125°C SCSOA; non-repetitive	10	µs
P_{tot}	T_C = 25°C	640	W

Symbol	Conditions	Characteristic Values (T_{VJ} = 25°C, unless otherwise specified) min.	typ.	max.	
$V_{CE(sat)}$	I_C = 100 A; V_{GE} = 15 V; T_{VJ} = 25°C		3.3	3.9	V
	T_{VJ} = 125°C		4.0		V
$V_{GE(th)}$	I_C = 4 mA; V_{GE} = V_{CE}	4.5		6.5	V
I_{CES}	V_{CE} = V_{CES}; V_{GE} = 0 V; T_{VJ} = 25°C			1.3	mA
	T_{VJ} = 125°C		4.0		mA
I_{GES}	V_{CE} = 0 V; V_{GE} = ± 20 V			600	nA
$t_{d(on)}$	Inductive load, T_{VJ} = 125°C V_{CE} = 600 V; I_C = 100 A V_{GE} = ±15 V; R_G = 5.6 Ω		130		ns
t_r			60		ns
$t_{d(off)}$			365		ns
t_f			30		ns
E_{on}			12.0		mJ
E_{off}			5.0		mJ
C_{ies}	V_{CE} = 25 V; V_{GE} = 0 V; f = 1 MHz		6.5		nF
Q_{Gon}	V_{CE} = 600 V; V_{GE} = ±15 V; I_C = 100 A		1.1		µC
R_{thJC}	(per IGBT)			0.19	K/W

Features

- Fast NPT IGBTs
  - low saturation voltage
  - positive temperature coefficient for easy paralleling
  - fast switching
  - short tail current for optimized performance also in resonant circuits
- HiPerFRED™ diode:
  - fast reverse recovery
  - low operating forward voltage
  - low leakage current
- Industry Standard Package
  - solderable pins for PCB mounting
  - isolated copper base plate

Typical Applications

- motor control
  . DC motor amature winding
  . DC motor excitation winding
  . synchronous motor excitation winding
- supply of transformer primary winding
  . power supplies
  . welding
  . X-ray
  . battery charger

IXYS reserves the right to change limits, test conditions and dimensions.

© 2004 IXYS All rights reserved

勝 特 力 材 料 886-3-5753170
胜特力电子(上海) 86-21-34970699
胜特力电子(深圳) 86-755-83298787
Http://www.100y.com.tw

Diodes

Symbol	Conditions	Maximum Ratings	
I_{F25}	T_C = 25°C	200	A
I_{F80}	T_C = 80°C	130	A

Symbol	Conditions	Characteristic Values min.	typ.	max.	
V_F	I_F = 100 A; V_{GE} = 0 V; T_{VJ} = 25°C		2.3	2.6	V
	T_{VJ} = 125°C		1.7		V
I_{RM}	I_F = 120 A; di_F/dt = -750 A/µs; T_{VJ} = 125°C		82		A
t_{rr}	V_R = 600 V; V_{GE} = 0 V		200		ns
R_{thJC}	(per diode)			0.3	K/W

Module

Symbol	Conditions	Maximum Ratings	
T_{VJ}	operating	-40...+125	°C
T_{JM}		+150	°C
T_{stg}		-40...+125	°C
V_{ISOL}	I_{ISOL} ≤ 1 mA; 50/60 Hz	2500	V~
M_d	Mounting torque (M5)	3 - 6	Nm

Symbol	Conditions	Characteristic Values min.	typ.	max.	
$R_{pin-chip}$			1.8		mΩ
d_S	Creepage distance on surface	10			mm
d_A	Strike distance in air	10			mm
R_{thCH}	with heatsink compound		0.01		K/W
Weight			300		g

Equivalent Circuits for Simulation

Conduction

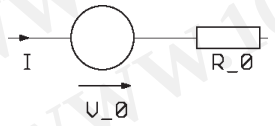

IGBT (typ. at V_{GE} = 15 V; T_J = 125°C)
V_0 = 2.05 V ; R_0 = 19.5 mΩ

Free Wheeling Diode (typ. at T_J = 125°C)
V_0 = 1.27 V; R_0 = 4.3 mΩ

Thermal Response

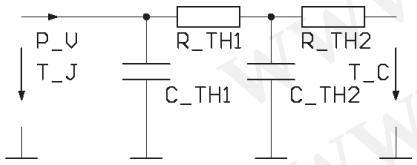

IGBT (typ.)
C_{th1} = 0.409 J/K; R_{th1} = 0.14 K/W
C_{th2} = 2.203 J/K; R_{th2} = 0.05 K/W

Free Wheeling Diode (typ.)
C_{th1} = 0.301 J/K; R_{th1} = 0.24 K/W
C_{th2} = 2.005 J/K; R_{th2} = 0.062 K/W

Dimensions in mm (1 mm = 0.0394")

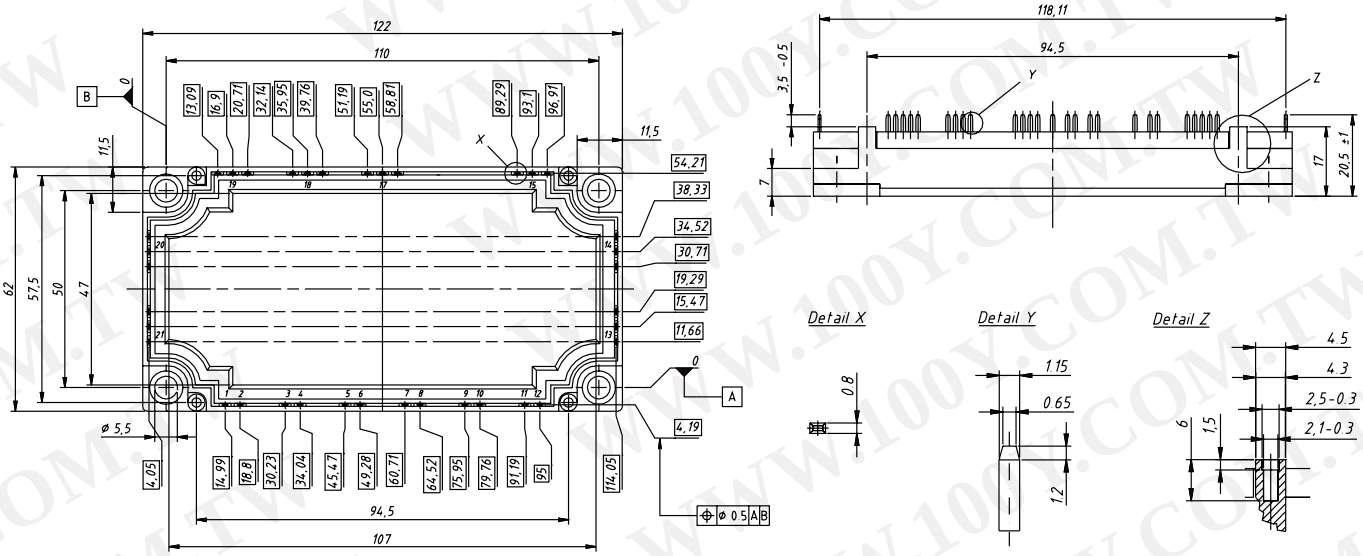

pins 5, 6, 7, 8 and 17 for MWI only

© 2004 IXYS All rights reserved