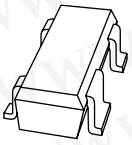

BFG520W; BFG520W/X

NPN 9 GHz wideband transistors

Rev. 04 — 21 November 2007 Product data sheet

IMPORTANT NOTICE

Dear customer,

As from October 1st, 2006 Philips Semiconductors has a new trade name - NXP Semiconductors, which will be used in future data sheets together with new contact details.
In data sheets where the previous Philips references remain, please use the new links as shown below.

http://www.philips.semiconductors.com use http://www.nxp.com

http://www.semiconductors.philips.com use http://www.nxp.com (Internet)

sales.addresses@www.semiconductors.philips.com use salesaddresses@nxp.com (email)

The copyright notice at the bottom of each page (or elsewhere in the document, depending on the version)
- © Koninklijke Philips Electronics N.V. (year). All rights reserved -
is replaced with:
- © NXP B.V. (year). All rights reserved. -

If you have any questions related to the data sheet, please contact our nearest sales office via e-mail or phone (details via salesaddresses@nxp.com). Thank you for your cooperation and understanding,

NXP Semiconductors

勝 特 力 材 料 886-3-5753170
胜特力电子(上海) 86-21-34970699
胜特力电子(深圳) 86-755-83298787
Http://www.100y.com.tw

founded by Philips

FEATURES

- High power gain
- Low noise figure
- High transition frequency
- Gold metallization ensures excellent reliability.

APPLICATIONS

RF front end wideband applications in the GHz range, such as analog and digital cellular telephones, cordless telephones (CT2, CT3, PCN, DECT, etc.), radar detectors, pagers, satellite television tuners (SATV) and repeater amplifiers in fibre-optic systems.

DESCRIPTION

NPN silicon planar epitaxial transistor in a 4-pin dual-emitter SOT343N plastic package.

MARKING

TYPE NUMBER	CODE
BFG520W	N3
BFG520W/X	N4

PINNING

PIN	DESCRIPTION	
	BFG520W	BFG520W/X
1	collector	collector
2	base	emitter
3	emitter	base
4	emitter	emitter

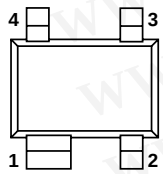

Top view MBK523

Fig.1 Simplified outline SOT343N.

QUICK REFERENCE DATA

SYMBOL	PARAMETER	CONDITIONS	MIN.	TYP.	MAX.	UNIT
V_{CBO}	collector-base voltage	open emitter	–	–	20	V
V_{CES}	collector-emitter voltage	R_{BE} = 0	–	–	15	V
I_C	collector current (DC)		–	–	70	mA
P_{tot}	total power dissipation	$T_s \leq 85$ °C	–	–	500	mW
h_{FE}	DC current gain	I_C = 20 mA; V_{CE} = 6 V	60	120	250	
C_{re}	feedback capacitance	I_C = 0; V_{CB} = 6 V; f = 1 MHz	–	0.35	–	pF
f_T	transition frequency	I_C = 20 mA; V_{CE} = 6 V; f = 1 GHz; T_{amb} = 25 °C	–	9	–	GHz
G_{UM}	maximum unilateral power gain	I_C = 20 mA; V_{CE} = 6 V; f = 900 MHz; T_{amb} = 25 °C	–	17	–	dB
$\|S_{21}\|^2$	insertion power gain	I_C = 20 mA; V_{CE} = 6 V; f = 900 MHz; T_{amb} = 25 °C	16	17	–	dB
F	noise figure	$\Gamma_s = \Gamma_{opt}$; I_C = 5 mA; V_{CE} = 6 V; f = 900 MHz	–	1.1	1.6	dB

勝 特 力 材 料 886-3-5753170
胜特力电子(上海) 86-21-34970699
胜特力电子(深圳) 86-755-83298787
Http://www.100y.com.tw

LIMITING VALUES

In accordance with the Absolute Maximum Rating System (IEC 134).

SYMBOL	PARAMETER	CONDITIONS	MIN.	MAX.	UNIT
V_{CBO}	collector-base voltage	open emitter	–	20	V
V_{CES}	collector-emitter voltage	R_{BE} = 0	–	15	V
V_{EBO}	emitter-base voltage	open collector	–	2.5	V
I_C	collector current (DC)		–	70	mA
P_{tot}	total power dissipation	$T_s \leq 85$ °C; see Fig.2; note 1	–	500	mW
T_{stg}	storage temperature		–65	+150	°C
T_j	junction temperature		–	175	°C

Note

1. T_s is the temperature at the soldering point of the collector pin.

THERMAL CHARACTERISTICS

SYMBOL	PARAMETER	CONDITIONS	VALUE	UNIT
$R_{th\ j\text{-}s}$	thermal resistance from junction to soldering point	$T_s \leq 85$ °C; note 1	180	K/W

Note

1. T_s is the temperature at the soldering point of the collector pin.

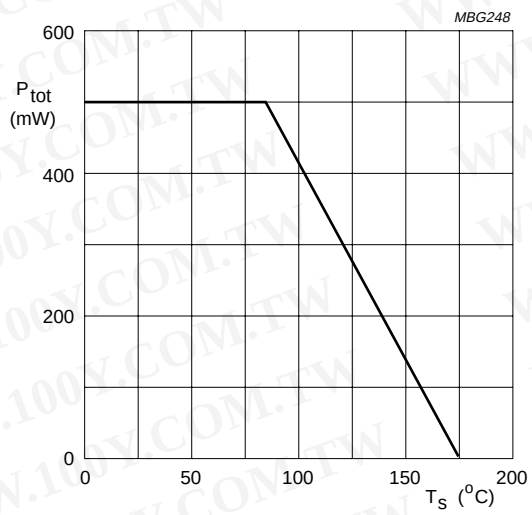

Fig.2 Power derating curve.

勝 特 力 材 料 886-3-5753170
胜特力电子(上海) 86-21-34970699
胜特力电子(深圳) 86-755-83298787
Http://www.100y.com.tw

CHARACTERISTICS

T_j = 25 °C unless otherwise specified.

SYMBOL	PARAMETER	CONDITIONS	MIN.	TYP.	MAX.	UNIT
$V_{(BR)CBO}$	collector-base breakdown voltage	I_C =10 μA; I_E = 0	20	–	–	V
$V_{(BR)CES}$	collector-emitter breakdown voltage	I_C = 10 μA; R_{BE} = 0	15	–	–	V
$V_{(BR)EBO}$	emitter-base breakdown voltage	I_E = 10 μA; I_C = 0	2.5	–	–	V
I_{CBO}	collector leakage current	V_{CB} = 6 V; I_E = 0	–	–	50	nA
h_{FE}	DC current gain	I_C = 20 mA; V_{CE} = 6 V; see Fig.3	60	120	250	
C_{re}	feedback capacitance	I_C = 0; V_{CB} = 6 V; f = 1 MHz; see Fig.4	–	0.35	–	pF
f_T	transition frequency	I_C = 20 mA; V_{CE} = 6 V; f = 1 GHz; T_{amb} = 25 °C; see Fig.5	–	9	–	GHz
G_{UM}	maximum unilateral power gain; note 1	I_C = 20 mA; V_{CE} = 6 V; f = 900 MHz; T_{amb} = 25 °C	–	17	–	dB
		I_C = 20 mA; V_{CE} = 6 V; f = 2 GHz; T_{amb} = 25 °C	–	11	–	dB
$\|S_{21}\|^2$	insertion power gain	I_C = 20 mA; V_{CE} = 6 V; f = 900 MHz; T_{amb} = 25 °C	16	17	–	dB
F	noise figure	$\Gamma_s = \Gamma_{opt}$; I_C = 5 mA; V_{CE} = 6 V; f = 900 MHz	–	1.1	1.6	dB
		$\Gamma_s = \Gamma_{opt}$; I_C = 20 mA; V_{CE} = 6 V; f = 900 MHz	–	1.6	2.1	dB
		$\Gamma_s = \Gamma_{opt}$; I_C = 5 mA; V_{CE} = 6 V; f = 2 GHz	–	1.85	–	dB
P_{L1}	output power at 1 dB gain compression	I_C = 20 mA; V_{CE} = 6 V; f = 900 MHz; R_L = 50 Ω; T_{amb} = 25 °C	–	17	–	dBm
ITO	third order intercept point	note 2	–	26	–	dBm
V_o	output voltage	note 3	–	275	–	mV
d_2	second order intermodulation distortion	note 4	–	–50	–	dB

Notes

1. G_{UM} is the maximum unilateral power gain, assuming S_{12} is zero. $G_{UM} = 10 \log \frac{|S_{21}|^2}{(1-|S_{11}|^2)(1-|S_{22}|^2)}$ dB.
2. I_C = 20 mA; V_{CE} = 6 V; R_L = 50 Ω; T_{amb} = 25 °C; f_p = 900 MHz; f_q = 902 MHz; measured at $2f_p - f_q$ = 898 MHz and $2f_q - f_p$ = 904 MHz.
3. d_{im} = –60 dB (DIN45004B); I_C = 20 mA; V_{CE} = 6 V; $V_p = V_o$; $V_q = V_o$ –6 dB; $V_r = V_o$ –6 dB; R_L = 75 Ω; f_p = 795.25 MHz; f_q = 803.25 MHz; f_r = 805.25 MHz; measured at $f_p + f_q - f_r$ = 793.25 MHz.
4. I_C = 20 mA; V_{CE} = 6 V; V_o = 75 mV; R_L = 75 Ω; T_{amb} = 25 °C; f_p = 250 MHz; f_q = 560 MHz; measured at $f_p + f_q$ = 810 MHz.

勝 特 力 材 料 886-3-5753170
胜特力电子(上海) 86-21-34970699
胜特力电子(深圳) 86-755-83298787
Http://www.100y.com.tw

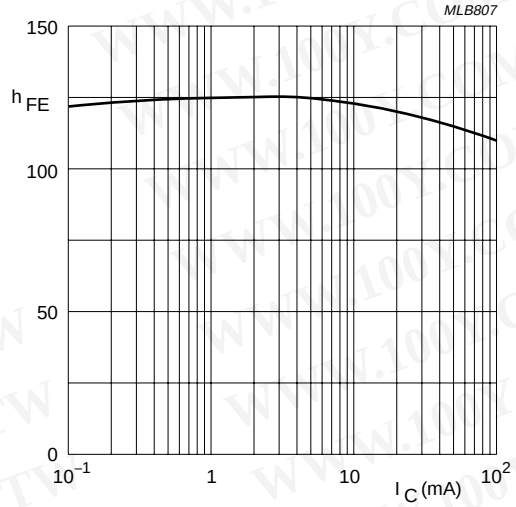

V_{CE} = 6 V.

Fig.3 DC current gain as a function of collector current; typical values.

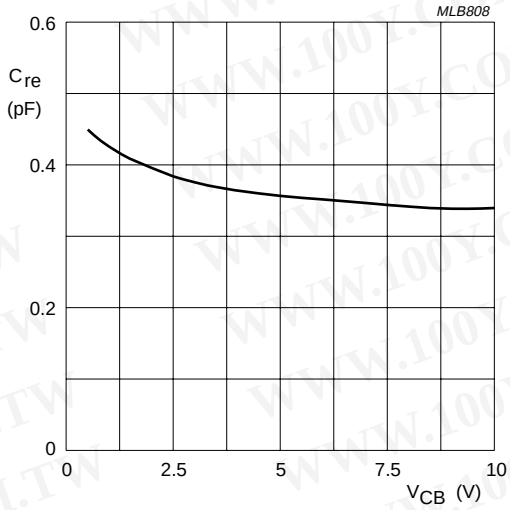

I_C = 0; f = 1 MHz.

Fig.4 Feedback capacitance as a function of collector-base voltage; typical values.

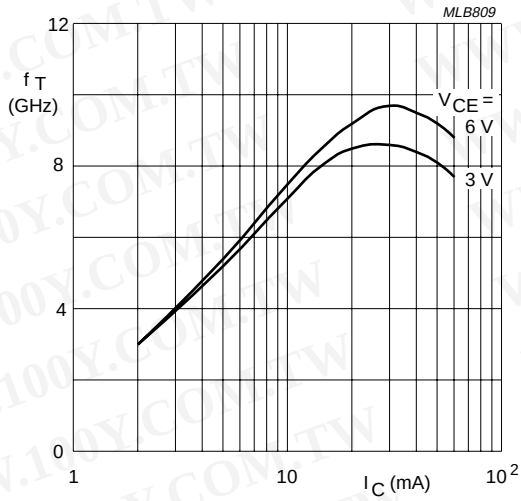

f = 1 GHz; T_{amb} = 25 °C.

Fig.5 Transition frequency as a function of collector current; typical values.

勝 特 力 材 料 886-3-5753170
胜特力电子(上海) 86-21-34970699
胜特力电子(深圳) 86-755-83298787
Http://www.100y.com.tw

勝 特 力 材 料 886-3-5753170
胜特力电子(上海) 86-21-34970699
胜特力电子(深圳) 86-755-83298787
Http://www.100y.com.tw

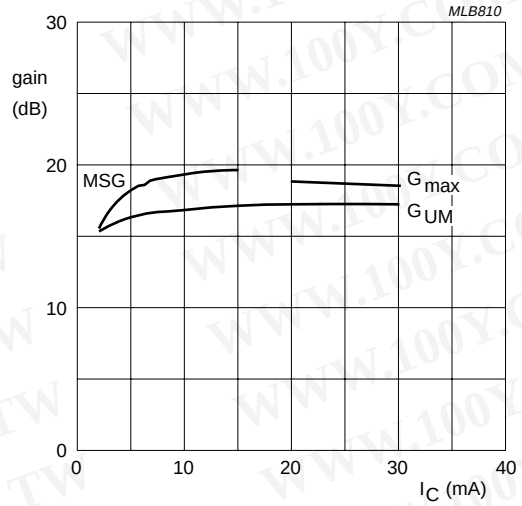

f = 900 MHz; V_{CE} = 6 V.

Fig.6 Gain as a function of collector current; typical values.

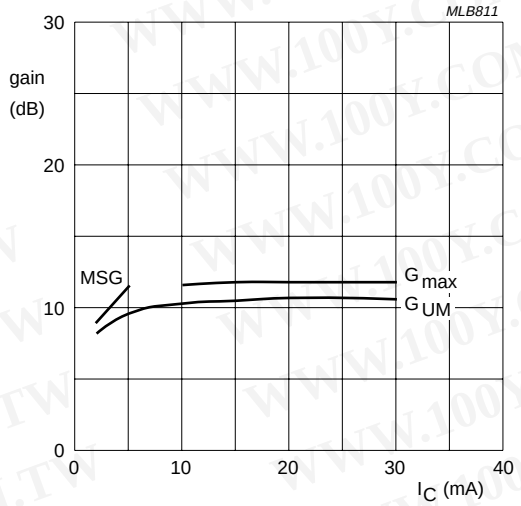

f = 2 GHz; V_{CE} = 6 V.

Fig.7 Gain as a function of collector current; typical values.

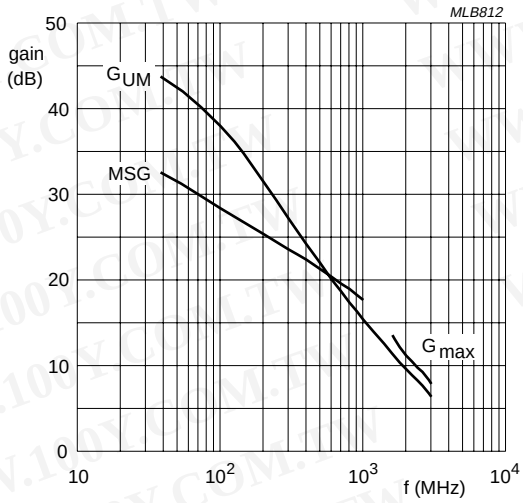

I_C = 5 mA; V_{CE} = 6 V.

Fig.8 Gain as a function of frequency; typical values.

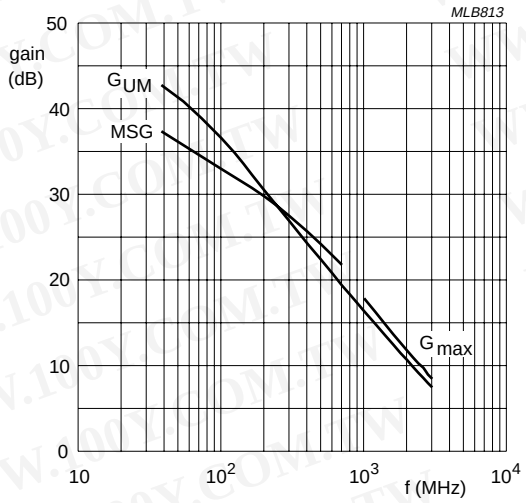

I_C = 20 mA; V_{CE} = 6 V.

Fig.9 Gain as a function of frequency; typical values.

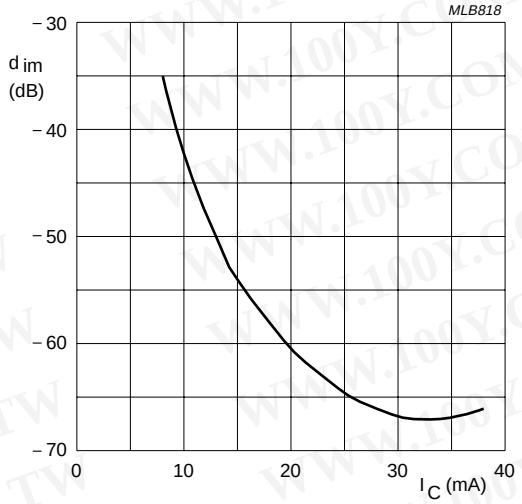

V_o = 275 mV; $f_p + f_q - f_r$ = 793.25 MHz; V_{CE} = 6 V; R_L = 75 Ω; T_{amb} = 25 °C.

Fig.10 Intermodulation distortion as a function of collector current; typical values.

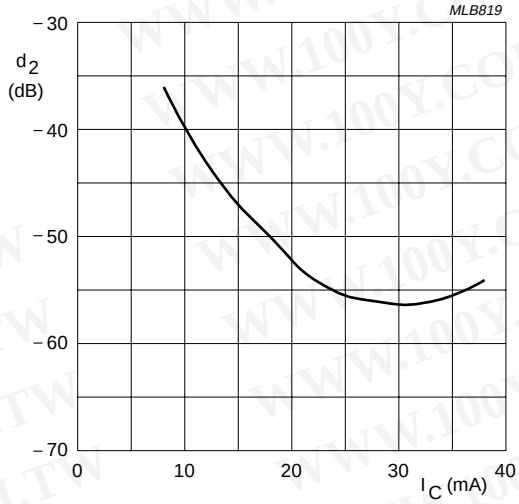

V_o = 75 mV; $f_p + f_q$ = 810 MHz; V_{CE} = 6 V; R_L = 75 Ω T_{amb} = 25 °C.

Fig.11 Second order intermodulation distortion as a function of collector current; typical values.

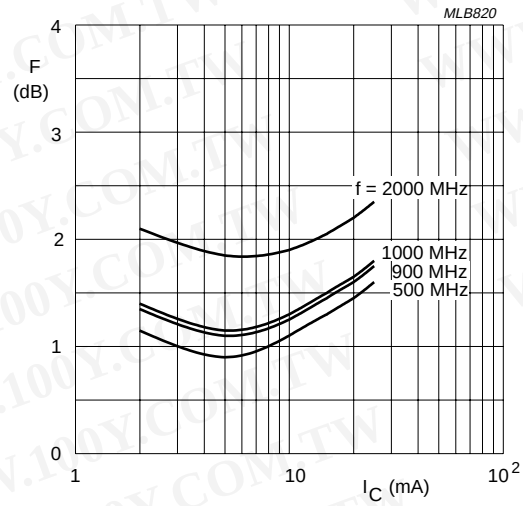

V_{CE} = 6 V.

Fig.12 Minimum noise figure as a function of collector current; typical values.

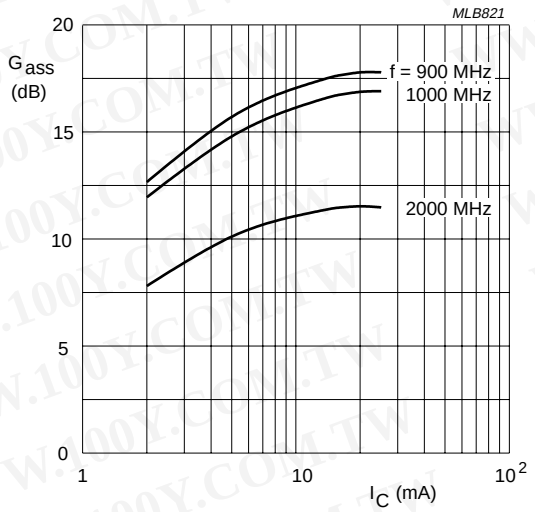

V_{CE} = 6 V.

Fig.13 Associated available gain as a function of collector current; typical values.

勝 特 力 材 料 886-3-5753170
胜特力电子(上海) 86-21-34970699
胜特力电子(深圳) 86-755-83298787
Http://www.100y.com.tw

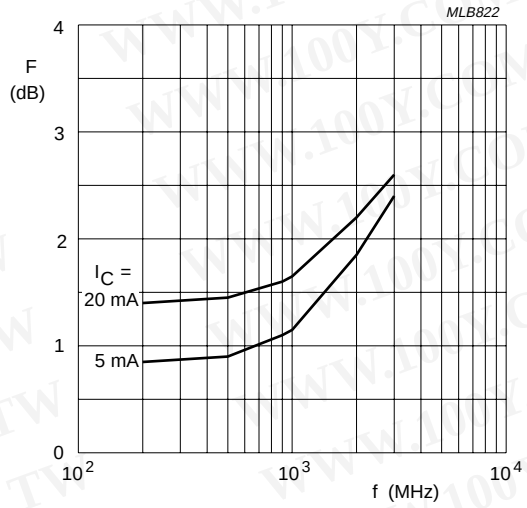

V_{CE} = 6 V.

Fig.14 Minimum noise figure as a function of frequency; typical values.

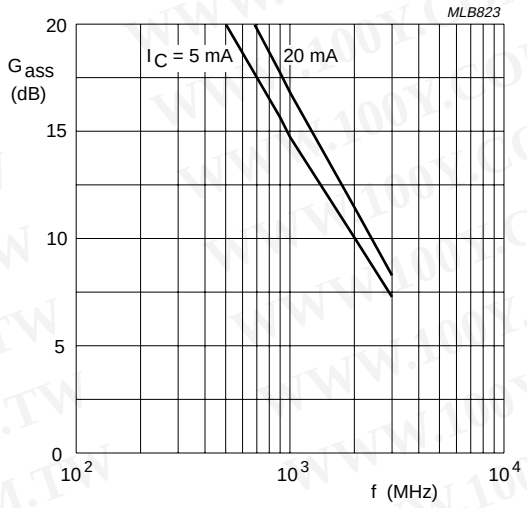

V_{CE} = 6 V.

Fig.15 Associated available gain as a function of frequency; typical values.

勝 特 力 材 料 886-3-5753170
胜特力电子(上海) 86-21-34970699
胜特力电子(深圳) 86-755-83298787
Http://www.100y.com.tw

勝 特 力 材 料 886-3-5753170
胜特力电子(上海) 86-21-34970699
胜特力电子(深圳) 86-755-83298787
Http://www.100y.com.tw

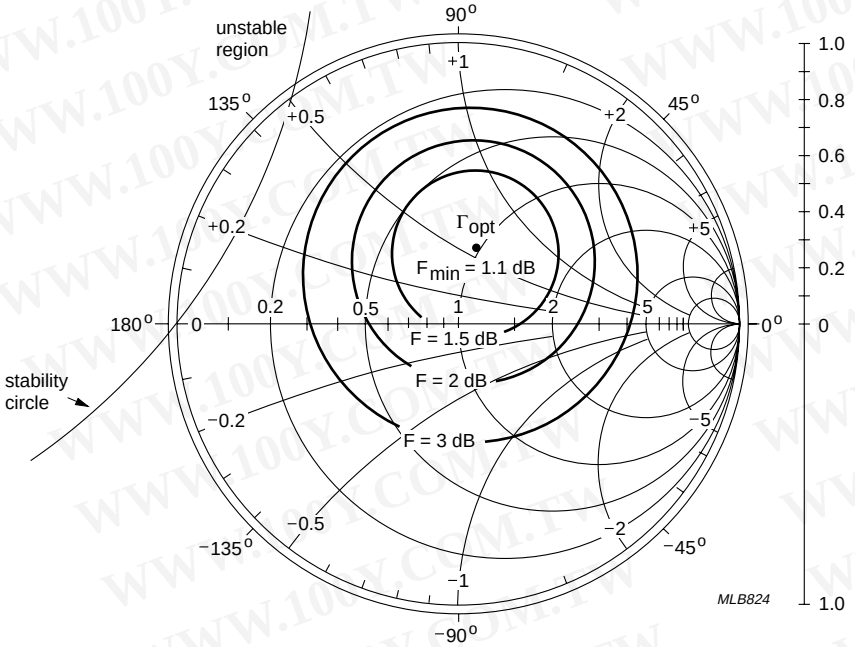

f = 900 MHz; V_{CE} = 6 V; I_C = 5 mA; Z_o = 50 Ω.

Fig.16 Common emitter noise figure circles; typical values.

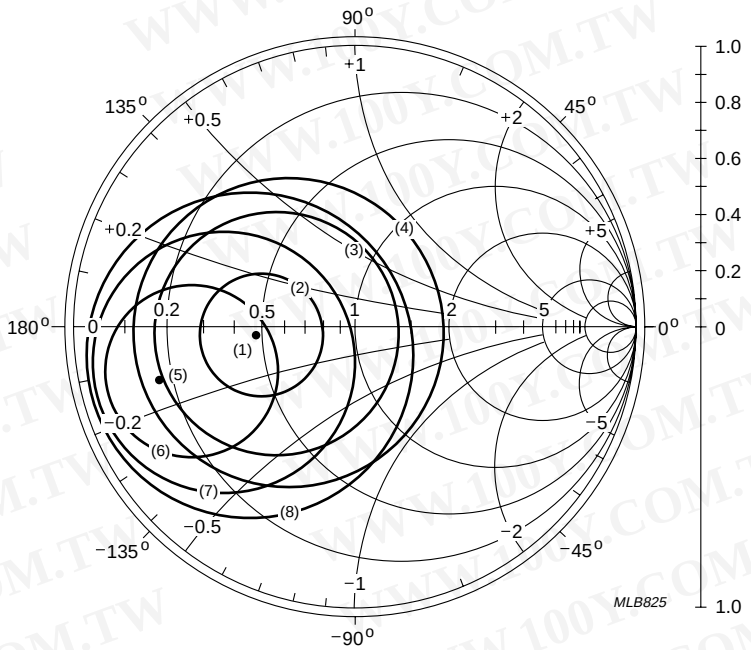

(1) Γ_{opt}; F_{min} = 1.85 dB.
(2) F = 2 dB.
(3) F = 2.5 dB.
(4) F = 3 dB.
(5) Γ_{ms}; G_{max} = 11.8 dB.
(6) G = 11 dB.
(7) G = 10 dB.
(8) G = 9 dB.

f = 2 GHz; V_{CE} = 6 V; I_C = 5 mA; Z_o = 50 Ω.

Fig.17 Common emitter noise figure circles; typical values.

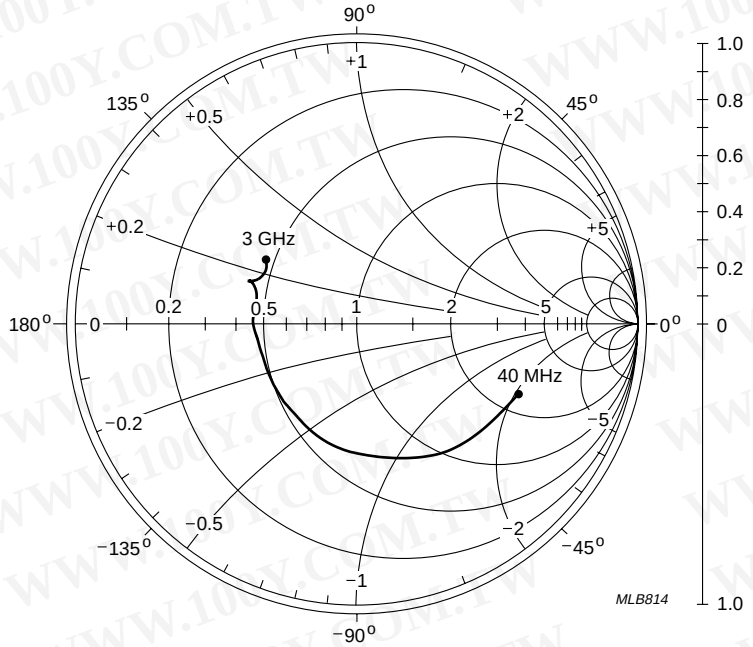

V_{CE} = 6 V; I_C = 20 mA; Z_o = 50 Ω.

Fig.18 Common emitter input reflection coefficient (S_{11}); typical values.

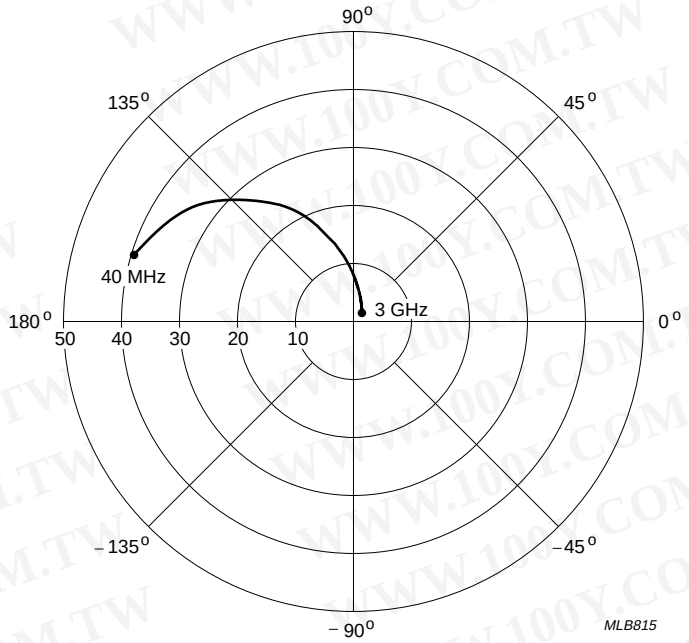

V_{CE} = 6 V; I_C = 20 mA.

Fig.19 Common emitter forward transmission coefficient (S_{21}); typical values.

勝 特 力 材 料 886-3-5753170
胜特力电子(上海) 86-21-34970699
胜特力电子(深圳) 86-755-83298787
Http://www.100y.com.tw

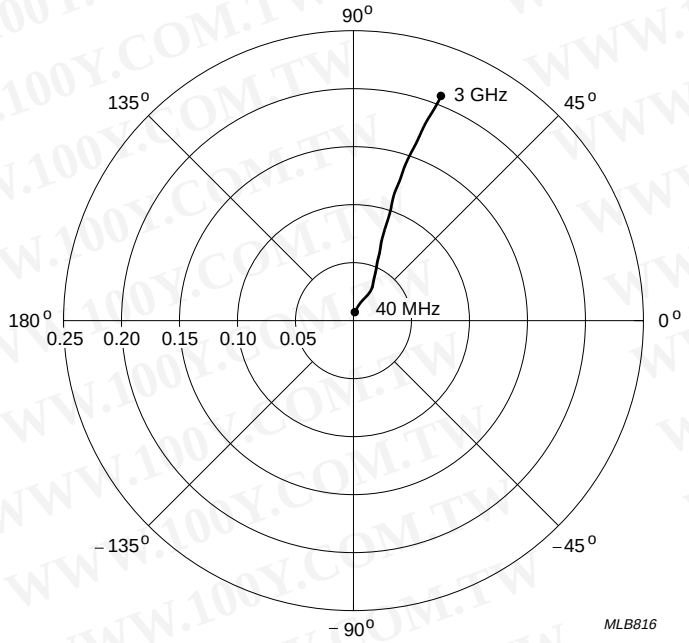

V_{CE} = 6 V; I_C = 20 mA.

Fig.20 Common emitter reverse transmission coefficient (S_{12}); typical values.

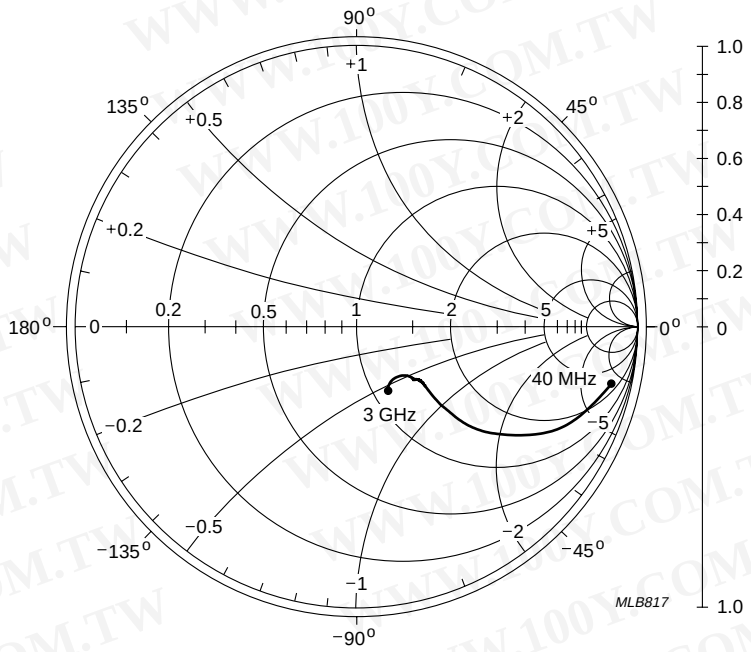

V_{CE} = 6 V; I_C = 20 mA; Z_o = 50 Ω.

Fig.21 Common emitter output reflection coefficient (S_{22}); typical values.

勝 特 力 材 料 886-3-5753170
胜特力电子(上海) 86-21-34970699
胜特力电子(深圳) 86-755-83298787
Http://www.100y.com.tw

SPICE parameters for the BFG520W die

SEQUENCE No.	PARAMETER	VALUE	UNIT
1	IS	1.016	fA
2	BF	220.1	–
3	NF	1.000	–
4	VAF	48.06	V
5	IKF	510	mA
6	ISE	283	fA
7	NE	2.035	–
8	BR	100.7	–
9	NR	0.988	–
10	VAR	1.692	V
11	IKR	2.352	mA
12	ISC	24.48	aA
13	NC	1.022	–
14	RB	10.00	Ω
15	IRB	1.000	μA
16	RBM	10.00	Ω
17	RE	775.3	mΩ
18	RC	2.210	Ω
19 (1)	XTB	0.000	–
20 (1)	EG	1.110	eV
21 (1)	XTI	3.000	–
22	CJE	1.245	pF
23	VJE	600.0	mV
24	MJE	0.258	–
25	TF	8.616	ps
26	XTF	6.788	–
27	VTF	1.414	V
28	ITF	110.3	mA
29	PTF	45.01	deg
30	CJC	447.6	fF
31	VJC	189.2	mV
32	MJC	0.070	–
33	XCJC	0.130	–
34	TR	543.7	ps
35 (1)	CJS	0.000	F
36 (1)	VJS	750.0	mV
37 (1)	MJS	0.000	–
38	FC	0.780	–

Note

1. These parameters have not been extracted, the default values are shown.

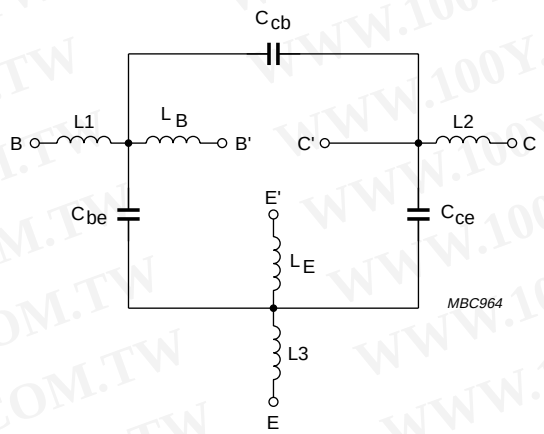

$QL_B = 50$; $QL_E = 50$; $QL_{B,E}(f) = QL_{B,E}\sqrt{(f/f_c)}$
f_c = scaling frequency = 1 GHz.

Fig.22 Package equivalent circuit SOT343N.

List of components (see Fig.22)

DESIGNATION	VALUE	UNIT
C_{be}	70	fF
C_{cb}	50	fF
C_{ce}	115	fF
L1	0.34	nH
L2	0.10	nH
L3	0.25	nH
L_B	0.40	nH
L_E	0.40	nH

勝 特 力 材 料 886-3-5753170
胜特力电子(上海) 86-21-34970699
胜特力电子(深圳) 86-755-83298787
Http://www.100y.com.tw

勝 特 力 材 料 886-3-5753170
胜特力电子(上海) 86-21-34970699
胜特力电子(深圳) 86-755-83298787
Http://www.100y.com.tw

PACKAGE OUTLINE

Plastic surface mounted package; 4 leads **SOT343N**

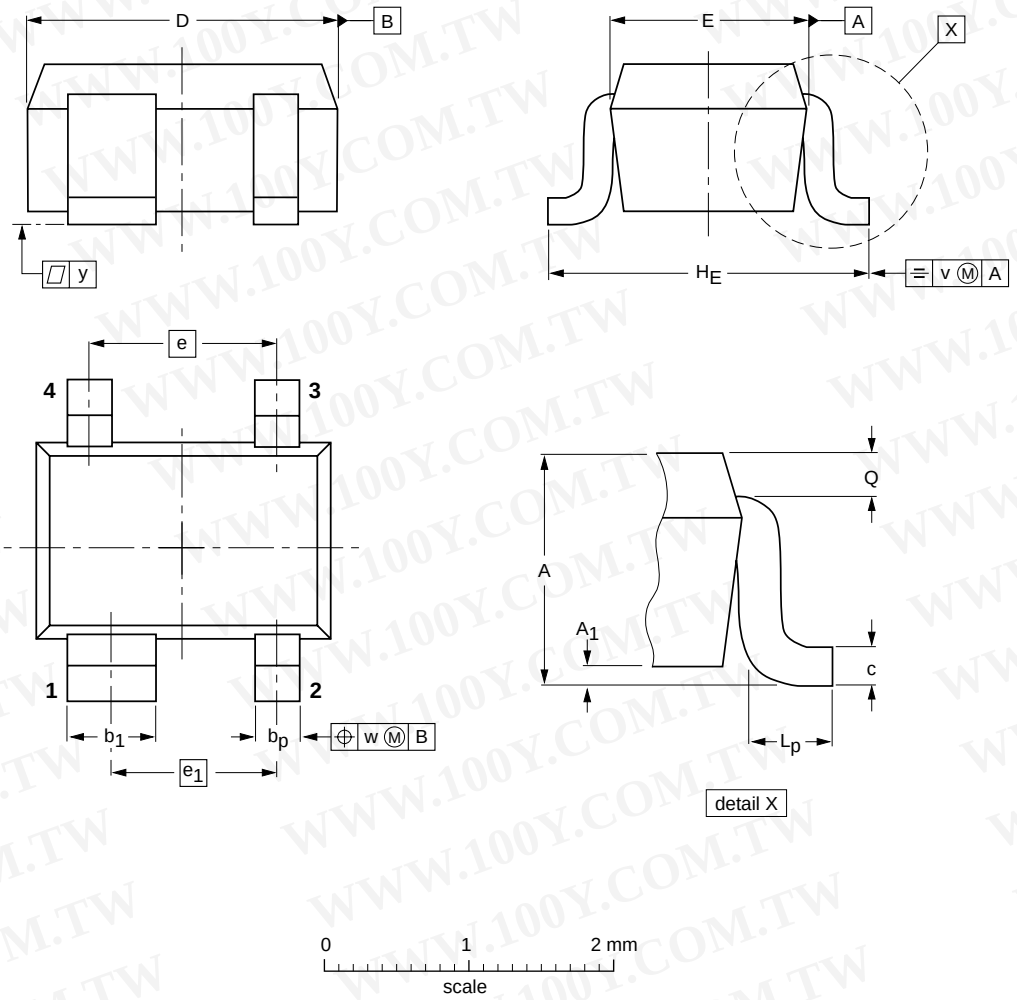

DIMENSIONS (mm are the original dimensions)

UNIT	A	A_1 max	b_p	b_1	c	D	E	e	e_1	H_E	L_p	Q	v	w	y
mm	1.1 0.8	0.1	0.4 0.3	0.7 0.5	0.25 0.10	2.2 1.8	1.35 1.15	1.3	1.15	2.2 2.0	0.45 0.15	0.23 0.13	0.2	0.2	0.1

OUTLINE VERSION	REFERENCES				EUROPEAN PROJECTION	ISSUE DATE
	IEC	JEDEC	EIAJ			
SOT343N						97-05-21

勝 特 力 材 料 886-3-5753170
胜特力电子(上海) 86-21-34970699
胜特力电子(深圳) 86-755-83298787
Http://www.100y.com.tw

Legal information

Data sheet status

Document status[1][2]	Product status[3]	Definition
Objective [short] data sheet	Development	This document contains data from the objective specification for product development.
Preliminary [short] data sheet	Qualification	This document contains data from the preliminary specification.
Product [short] data sheet	Production	This document contains the product specification.

[1] Please consult the most recently issued document before initiating or completing a design.

[2] The term 'short data sheet' is explained in section "Definitions".

[3] The product status of device(s) described in this document may have changed since this document was published and may differ in case of multiple devices. The latest product status information is available on the Internet at URL http://www.nxp.com.

Definitions

Draft — The document is a draft version only. The content is still under internal review and subject to formal approval, which may result in modifications or additions. NXP Semiconductors does not give any representations or warranties as to the accuracy or completeness of information included herein and shall have no liability for the consequences of use of such information.

Short data sheet — A short data sheet is an extract from a full data sheet with the same product type number(s) and title. A short data sheet is intended for quick reference only and should not be relied upon to contain detailed and full information. For detailed and full information see the relevant full data sheet, which is available on request via the local NXP Semiconductors sales office. In case of any inconsistency or conflict with the short data sheet, the full data sheet shall prevail.

Disclaimers

General — Information in this document is believed to be accurate and reliable. However, NXP Semiconductors does not give any representations or warranties, expressed or implied, as to the accuracy or completeness of such information and shall have no liability for the consequences of use of such information.

Right to make changes — NXP Semiconductors reserves the right to make changes to information published in this document, including without limitation specifications and product descriptions, at any time and without notice. This document supersedes and replaces all information supplied prior to the publication hereof.

Suitability for use — NXP Semiconductors products are not designed, authorized or warranted to be suitable for use in medical, military, aircraft, space or life support equipment, nor in applications where failure or malfunction of an NXP Semiconductors product can reasonably be expected to result in personal injury, death or severe property or environmental damage. NXP Semiconductors accepts no liability for inclusion and/or use of NXP Semiconductors products in such equipment or applications and therefore such inclusion and/or use is at the customer's own risk.

Applications — Applications that are described herein for any of these products are for illustrative purposes only. NXP Semiconductors makes no representation or warranty that such applications will be suitable for the specified use without further testing or modification.

Limiting values — Stress above one or more limiting values (as defined in the Absolute Maximum Ratings System of IEC 60134) may cause permanent damage to the device. Limiting values are stress ratings only and operation of the device at these or any other conditions above those given in the Characteristics sections of this document is not implied. Exposure to limiting values for extended periods may affect device reliability.

Terms and conditions of sale — NXP Semiconductors products are sold subject to the general terms and conditions of commercial sale, as published at http://www.nxp.com/profile/terms, including those pertaining to warranty, intellectual property rights infringement and limitation of liability, unless explicitly otherwise agreed to in writing by NXP Semiconductors. In case of any inconsistency or conflict between information in this document and such terms and conditions, the latter will prevail.

No offer to sell or license — Nothing in this document may be interpreted or construed as an offer to sell products that is open for acceptance or the grant, conveyance or implication of any license under any copyrights, patents or other industrial or intellectual property rights.

Trademarks

Notice: All referenced brands, product names, service names and trademarks are the property of their respective owners.

Contact information

For additional information, please visit: **http://www.nxp.com**

For sales office addresses, send an email to: **salesaddresses@nxp.com**

Revision history

Revision history

Document ID	Release date	Data sheet status	Change notice	Supersedes
BFG520W_N_4	20071121	Product data sheet	-	BFG520W_X_3
Modifications:	• Page 2; text in Pinning table changed			
BFG520W_X_3	19981002	Product specification	-	BFG520W_2
BFG520W_2	19950824	Product specification	-	BFG520W_1
BFG520W_1	19940829	-	-	-

勝 特 力 材 料 886-3-5753170
胜特力电子(上海) 86-21-34970699
胜特力电子(深圳) 86-755-83298787
Http://www.100y.com.tw

Please be aware that important notices concerning this document and the product(s) described herein, have been included in section 'Legal information'.

© NXP B.V. 2007. All rights reserved.

For more information, please visit: http://www.nxp.com
For sales office addresses, please send an email to: salesaddresses@nxp.com

Date of release: 21 November 2007
Document identifier: BFG520W_X_N_4

founded by
PHILIPS