STB46NF30, STP46NF30, STW46NF30

N-channel 300 V, 0.063 Ω typ, 42 A, STripFET™ II Power MOSFET in D²PAK, TO-220 and TO-247 packages

Datasheet — production data

Features

Type	V_{DSS}	$R_{DS(on)}$ max	I_D	Pw
STB46NF30	300 V	< 0.075 Ω	42 A	300 W
STP46NF30	300 V	< 0.075 Ω	42 A	300 W
STW46NF30	300 V	< 0.075 Ω	42 A	300 W

- Exceptional dv/dt capability
- 100% avalanche tested
- Low gate charge

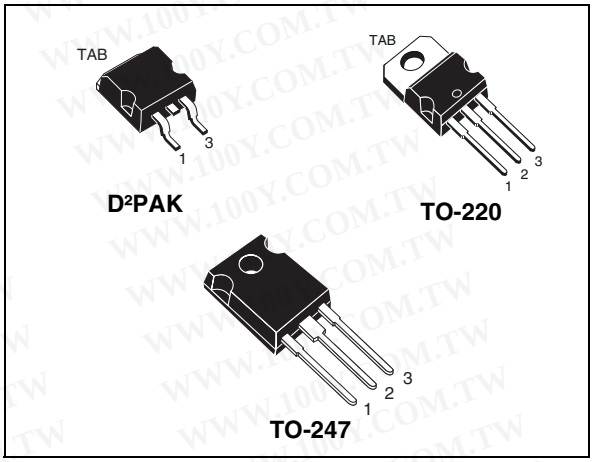

Applications

- Switching applications
  - Automotive

Description

These Power MOSFETs have been developed using STMicroelectronics' unique STripFET process, which is specifically designed to minimize input capacitance and gate charge. This renders the devices suitable for use as primary switch in advanced high-efficiency isolated DC-DC converters for telecom and computer applications, and applications with low gate charge driving requirements.

Figure 1. Internal schematic diagram

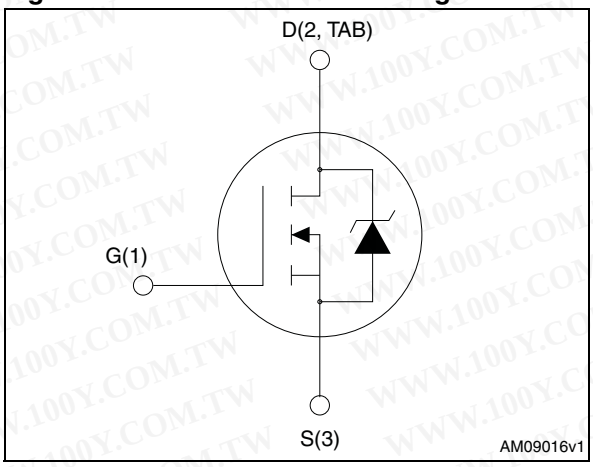

Table 1. Device summary

Order code	Marking	Package	Packaging
STB46NF30	46NF30	D²PAK	Tape and reel
STP46NF30	46NF30	TO-220	Tube
STW46NF30	46NF30	To-247	Tube

Contents

1 Electrical ratings

Table 2. Absolute maximum ratings

Symbol	Parameter	Value	Unit
V_{DS}	Drain-source voltage	300	V
V_{GS}	Gate-source voltage	± 20	V
I_D	Drain current (continuous) at T_C = 25 °C	42	A
I_D	Drain current (continuous) at T_C = 100 °C	27	A
I_{DM} (1)	Drain current (pulsed)	168	A
P_{tot}	Total dissipation at T_C = 25 °C	300	W
	Derating factor	2	W/°C
dv/dt (2)	Peak diode recovery voltage slope	10	V/ns
T_{stg}	Storage temperature	-55 to 175	°C
T_j	Max. operating junction temperature	175	°C

1. Pulse width limited by safe operating area.
2. $I_{SD} \leq 34$ A, di/dt $\leq$200 A/µs, $V_{DD} \leq 80\%\ V_{(BR)DSS}$.

Table 3. Thermal data

Symbol	Parameter	Value			Unit
		D^2PAK	TO-220	TO-247	
$R_{thj\text{-}case}$	Thermal resistance junction-case max	0.5			°C/W
$R_{thj\text{-}amb}$	Thermal resistance junction-ambient max	30	62.5	50	°C/W
$R_{thj\text{-}pcb}$	Thermal resistance junction-pcb max	30			°C/W
T_J	Maximum lead temperature for soldering purpose	300			°C

Table 4. Avalanche characteristics

Symbol	Parameter	Value	Unit
I_{AR}	Avalanche current, repetitive or not repetitive (1)	26	A
E_{AS} (2)	Single pulse avalanche energy	290	mJ

1. Pulse width limited by Tjmax
2. Starting T_j = 25 °C, $I_D = I_{AR}$, V_{DD} = 50 V

2 Electrical characteristics

(T_{CASE}= 25 °C unless otherwise specified)

Table 5. On/off states

Symbol	Parameter	Test conditions	Min.	Typ.	Max.	Unit
$V_{(BR)DSS}$	Drain-source breakdown voltage	I_D = 1 mA, V_{GS} =0	300			V
I_{DSS}	Zero gate voltage drain current (V_{GS} = 0)	V_{DS} = 300 V V_{DS} = 300 V, T_C = 125 °C			1 10	µA µA
I_{GSS}	Gate-body leakage current (V_{DS} = 0)	V_{GS} = ± 20 V			±100	nA
$V_{GS(th)}$	Gate threshold voltage	V_{DS} = V_{GS}, I_D = 250 µA	2	3	4	V
$R_{DS(on)}$	Static drain-source on-resistance	V_{GS} = 10 V, I_D = 17 A		0.063	0.075	Ω

Table 6. Dynamic

Symbol	Parameter	Test conditions	Min.	Typ.	Max.	Unit
C_{iss} C_{oss} C_{rss}	Input capacitance Output capacitance Reverse transfer capacitance	V_{DS} = 25 V, f = 1 MHz, V_{GS} = 0	-	3200 442 57	-	pF pF pF
$t_{d(on)}$ t_r $t_{d(off)}$ t_f	Turn-on delay time Rise time Turn-off delay time Fall time	V_{DD} = 150 V, I_D = 17 A R_G = 4.7 Ω V_{GS} = 10 V (see *Figure 16*)	-	25 38 80 46	-	ns ns ns ns
Q_g Q_{gs} Q_{gd}	Total gate charge Gate-source charge Gate-drain charge	V_{DD} = 240 V, I_D = 34 A, V_{GS} = 10 V (see *Figure 17*)	-	90 16 40	-	nC nC nC

Table 7. Source drain diode

Symbol	Parameter	Test conditions	Min.	Typ.	Max.	Unit
I_{SD} I_{SDM} (1)	Source-drain current Source-drain current (pulsed)		-		34 136	A A
V_{SD} (2)	Forward on voltage	I_{SD} = 34 A, V_{GS} = 0	-		1.6	V
t_{rr} Q_{rr} I_{RRM}	Reverse recovery time Reverse recovery charge Reverse recovery current	I_{SD} = 34 A, di/dt = 100 A/µs, V_{DD} = 60 V (see *Figure 18*)	-	215 1.7 16		ns nC A
t_{rr} Q_{rr} I_{RRM}	Reverse recovery time Reverse recovery charge Reverse recovery current	I_{SD} = 34 A, di/dt = 100 A/µs, V_{DD} = 60 V, T_j = 150 °C (see *Figure 18*)	-	252 2.3 19		ns nC A

1. Pulse width limited by safe operating area.
2. Pulsed: Pulse duration = 300 µs, duty cycle 1.5%

2.1 Electrical characteristics (curves)

Figure 2. Safe operating area for D²PAK and TO-220

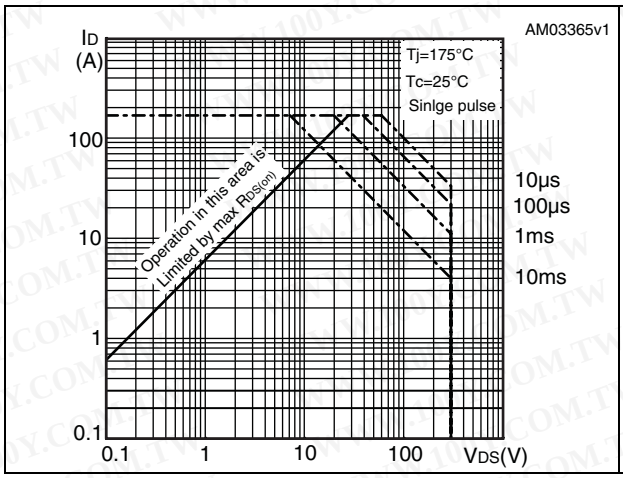

Figure 3. Thermal impedance for D²PAK and TO-220

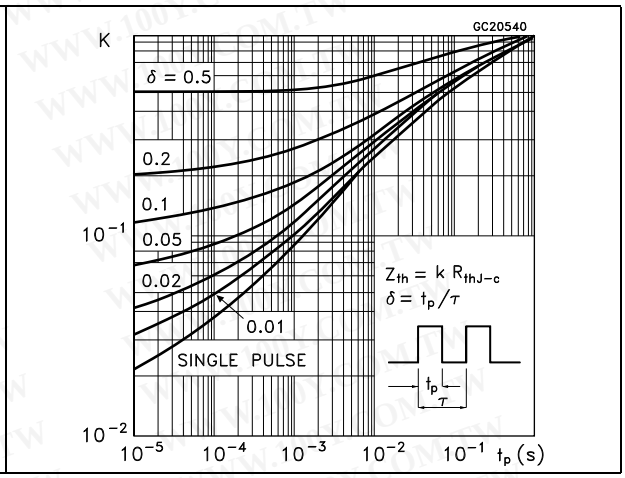

Figure 4. Safe operating area for TO-247

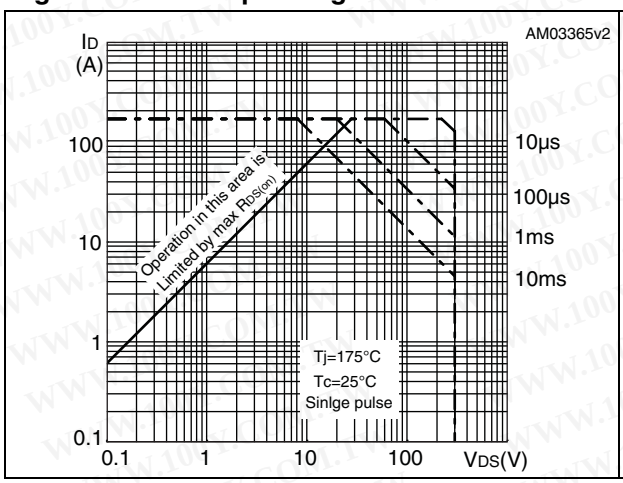

Figure 5. Thermal impedance for TO-247

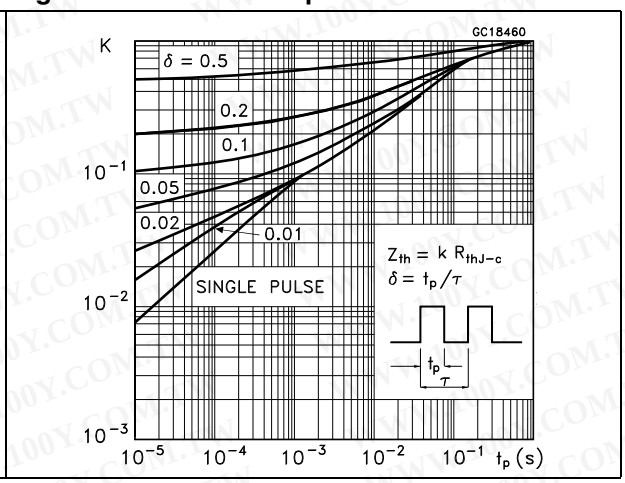

Figure 6. Output characteristics

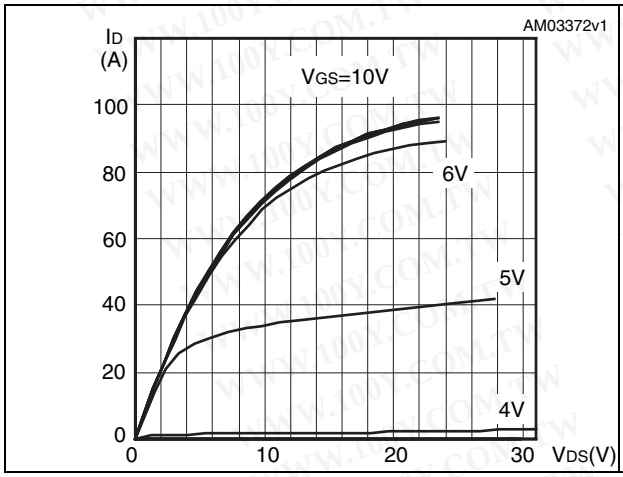

Figure 7. Transfer characteristics

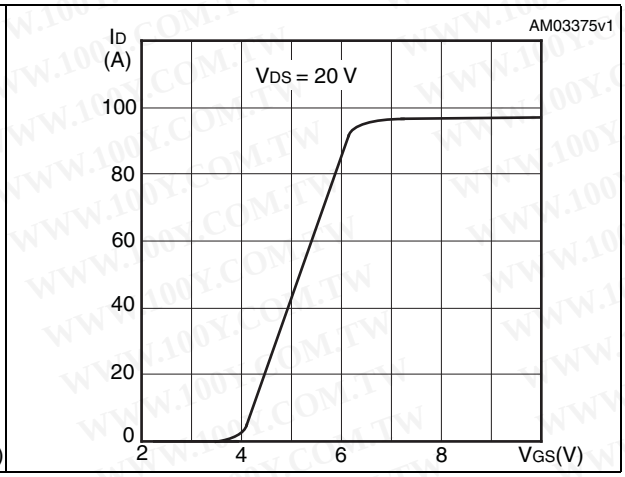

Figure 8. Normalized BV_{DSS} vs temperature

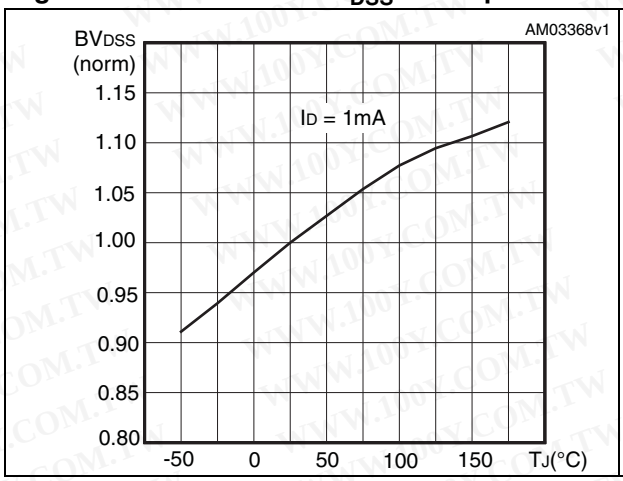

Figure 9. Static drain source on-resistance

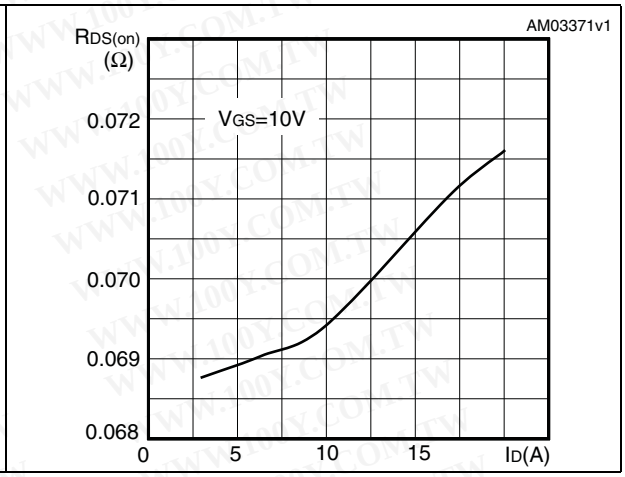

Figure 10. Gate charge vs gate-source voltage

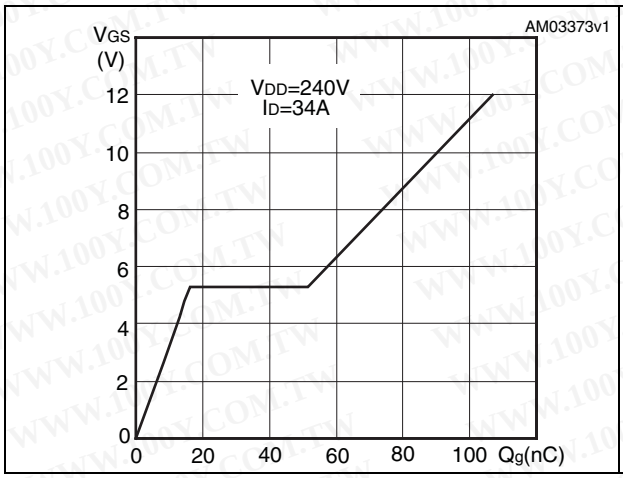

Figure 11. Capacitance variations

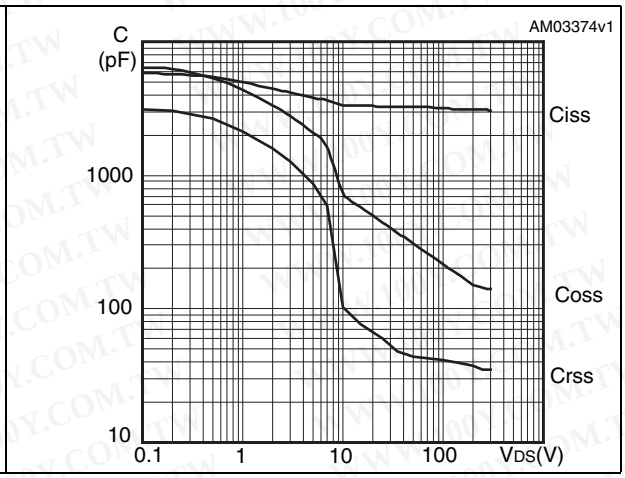

Figure 12. Normalized gate threshold voltage vs temperature

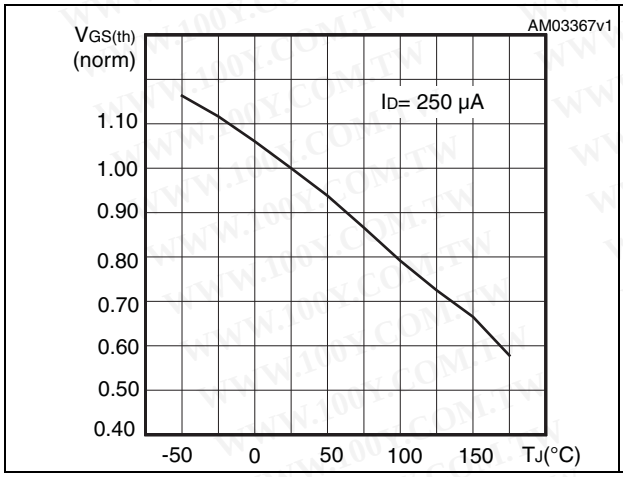

Figure 13. Normalized on resistance vs temperature

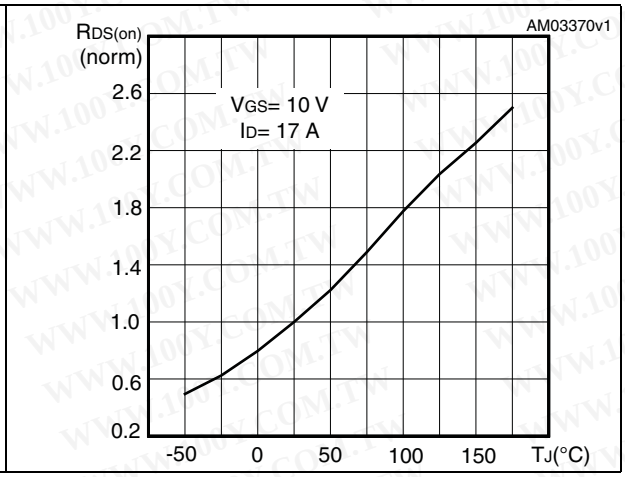

Figure 14. Source-drain diode forward characteristics

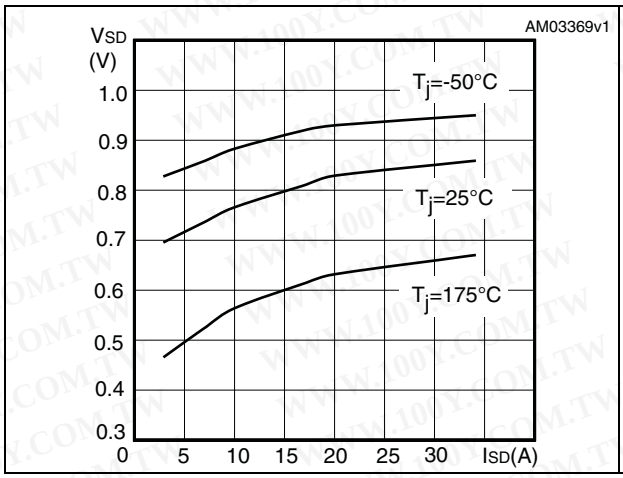

Figure 15. Avalanche energy vs starting Tj

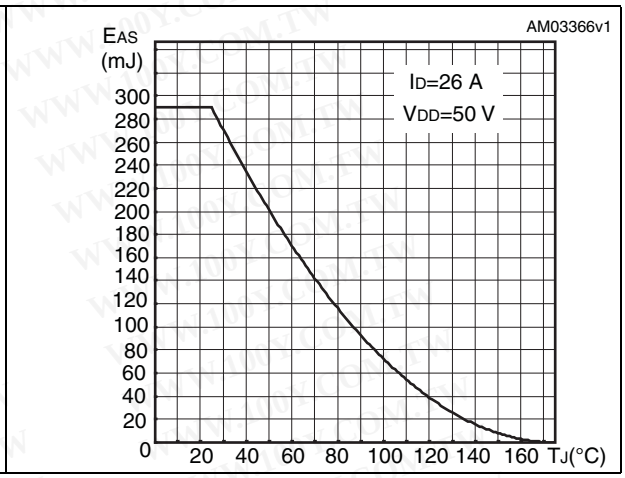

3 Test circuits

Figure 16. Switching times test circuit for resistive load

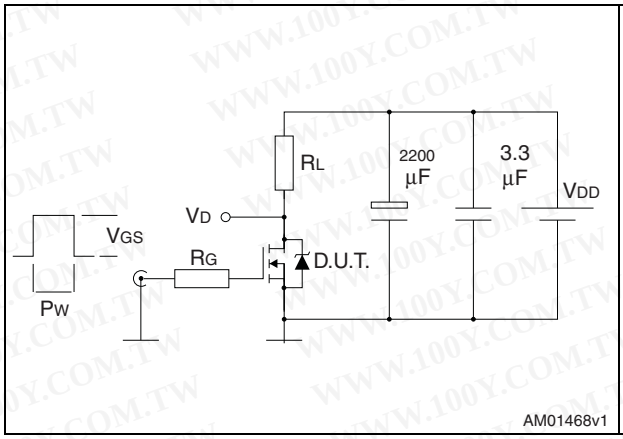

Figure 17. Gate charge test circuit

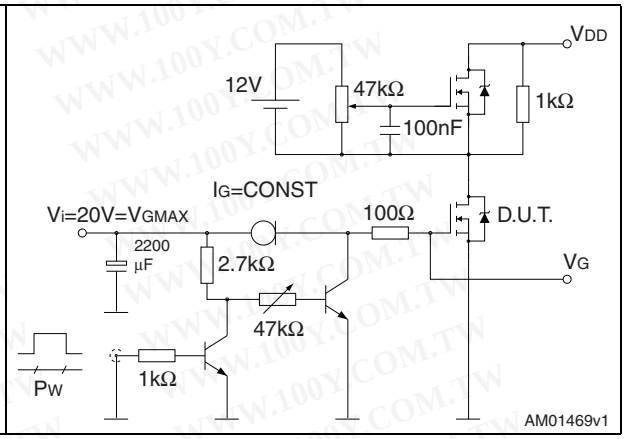

Figure 18. Test circuit for inductive load switching and diode recovery times

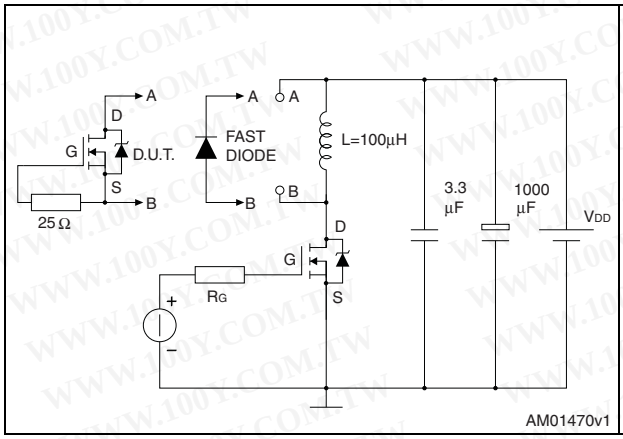

Figure 19. Unclamped inductive load test circuit

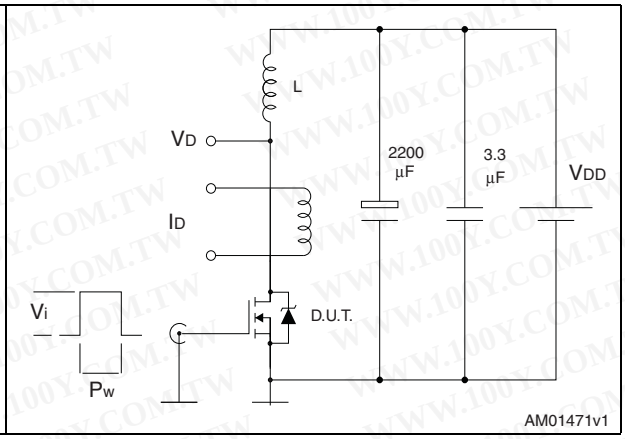

Figure 20. Unclamped inductive waveform

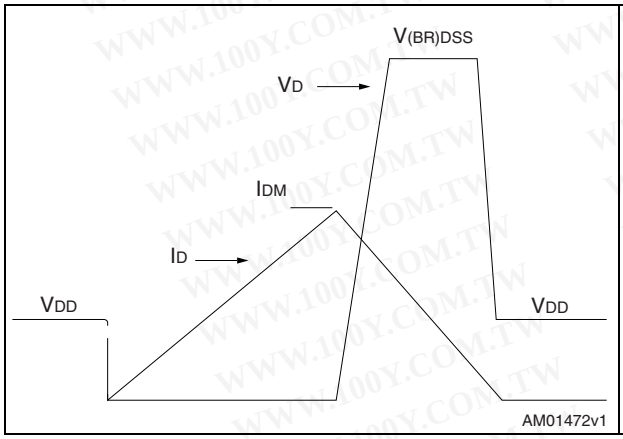

Figure 21. Switching time waveform

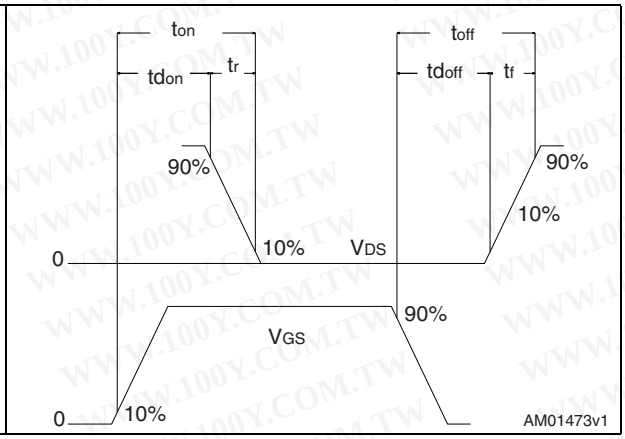

4 Package mechanical data

In order to meet environmental requirements, ST offers these devices in different grades of ECOPACK® packages, depending on their level of environmental compliance. ECOPACK® specifications, grade definitions and product status are available at: www.st.com. ECOPACK is an ST trademark.

Table 8. D²PAK (TO-263) mechanical data

Dim.	mm		
	Min.	Typ.	Max.
A	4.40		4.60
A1	0.03		0.23
b	0.70		0.93
b2	1.14		1.70
c	0.45		0.60
c2	1.23		1.36
D	8.95		9.35
D1	7.50		
E	10		10.40
E1	8.50		
e		2.54	
e1	4.88		5.28
H	15		15.85
J1	2.49		2.69
L	2.29		2.79
L1	1.27		1.40
L2	1.30		1.75
R		0.4	
V2	0°		8°

Figure 22. D²PAK (TO-263) drawing

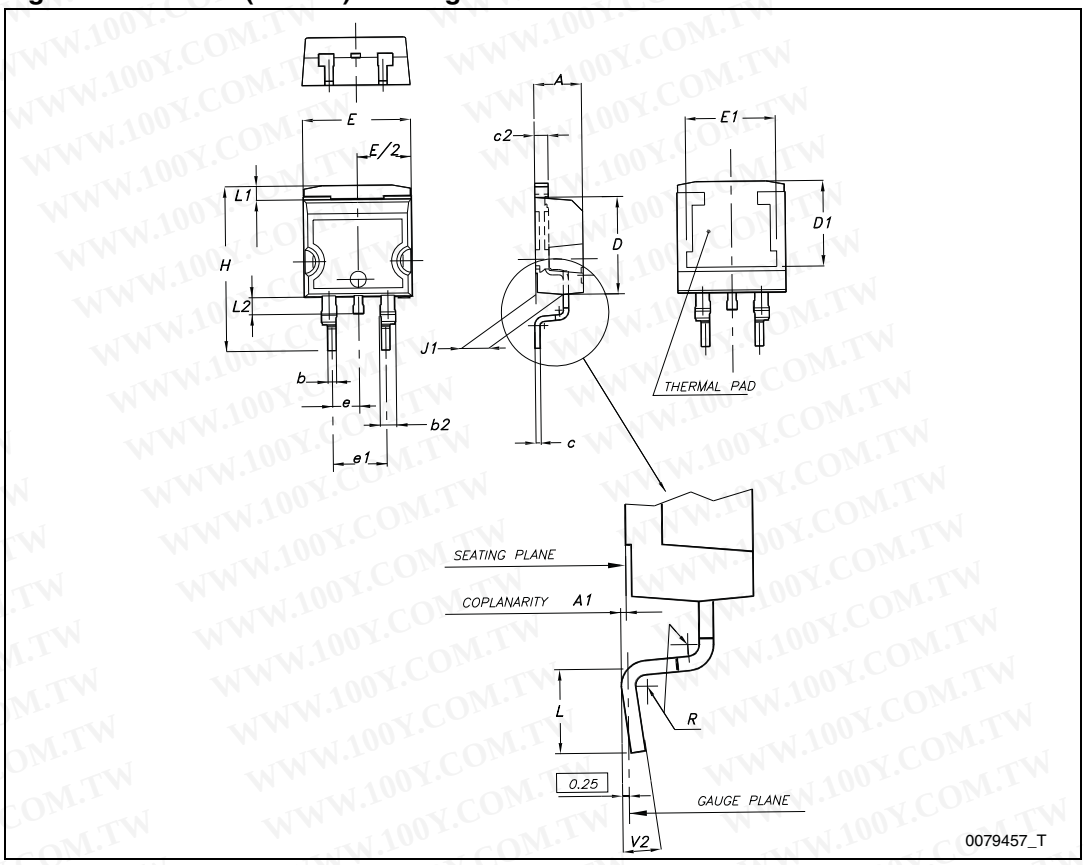

Figure 23. D²PAK footprint[a]

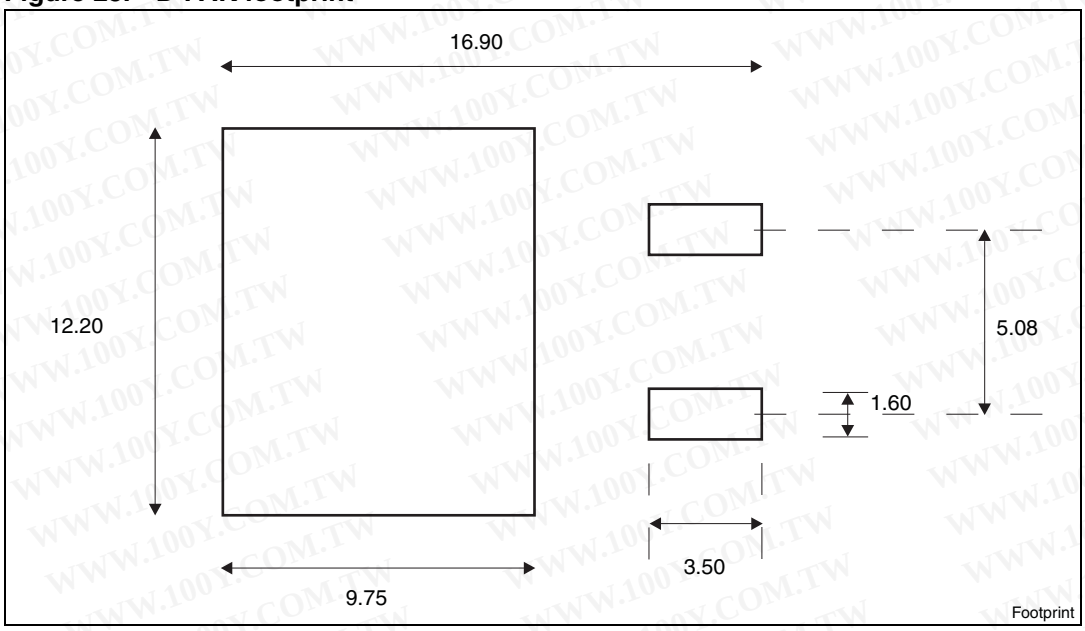

a. All dimension are in millimeters

Table 9. TO-220 type A mechanical data

Dim.	mm		
	Min.	Typ.	Max.
A	4.40		4.60
b	0.61		0.88
b1	1.14		1.70
c	0.48		0.70
D	15.25		15.75
D1		1.27	
E	10		10.40
e	2.40		2.70
e1	4.95		5.15
F	1.23		1.32
H1	6.20		6.60
J1	2.40		2.72
L	13		14
L1	3.50		3.93
L20		16.40	
L30		28.90	
∅P	3.75		3.85
Q	2.65		2.95

Figure 24. TO-220 type A drawing

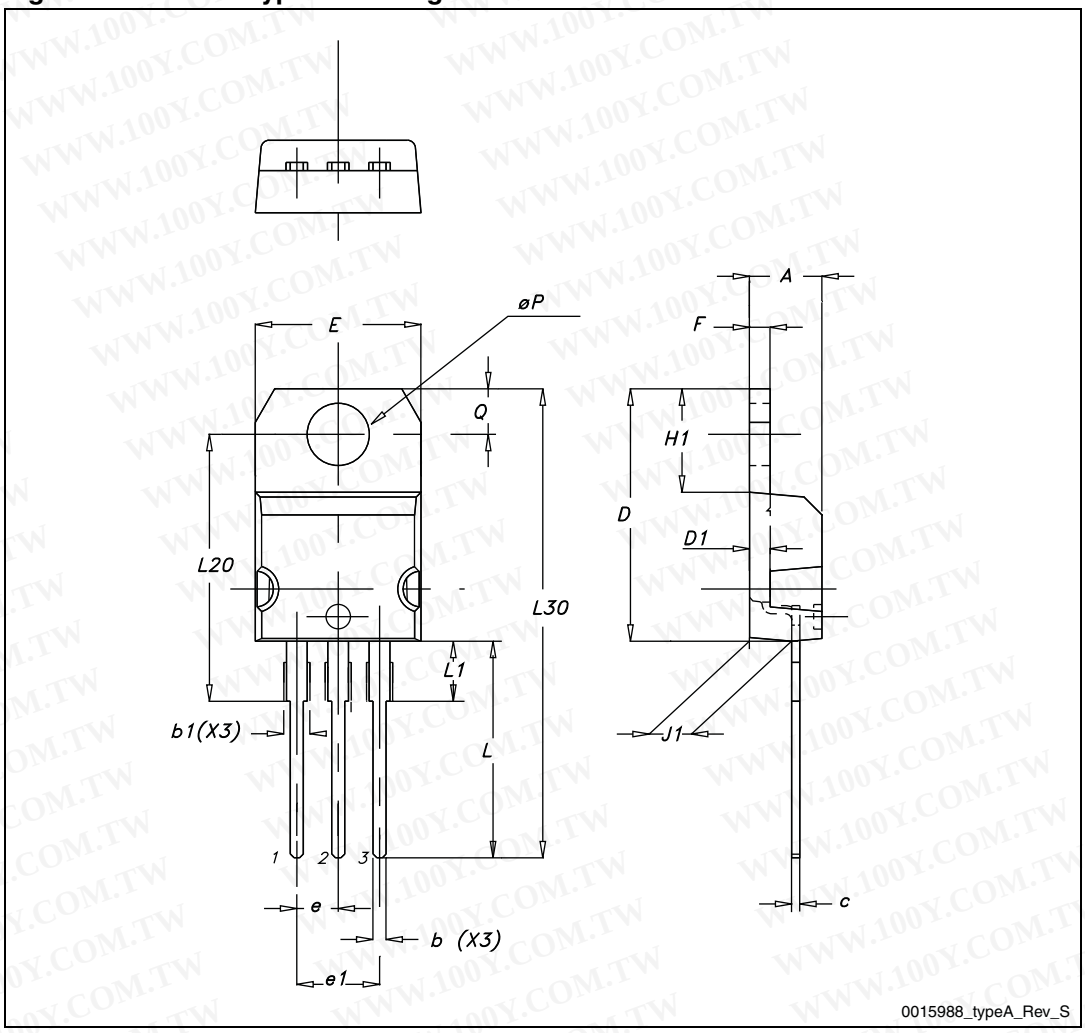

Table 10. TO-247 mechanical data

Dim.	mm.		
	Min.	Typ.	Max.
A	4.85		5.15
A1	2.20		2.60
b	1.0		1.40
b1	2.0		2.40
b2	3.0		3.40
c	0.40		0.80
D	19.85		20.15
E	15.45		15.75
e	5.30	5.45	5.60
L	14.20		14.80
L1	3.70		4.30
L2		18.50	
∅P	3.55		3.65
∅R	4.50		5.50
S	5.30	5.50	5.70

Figure 25. TO-247 drawing

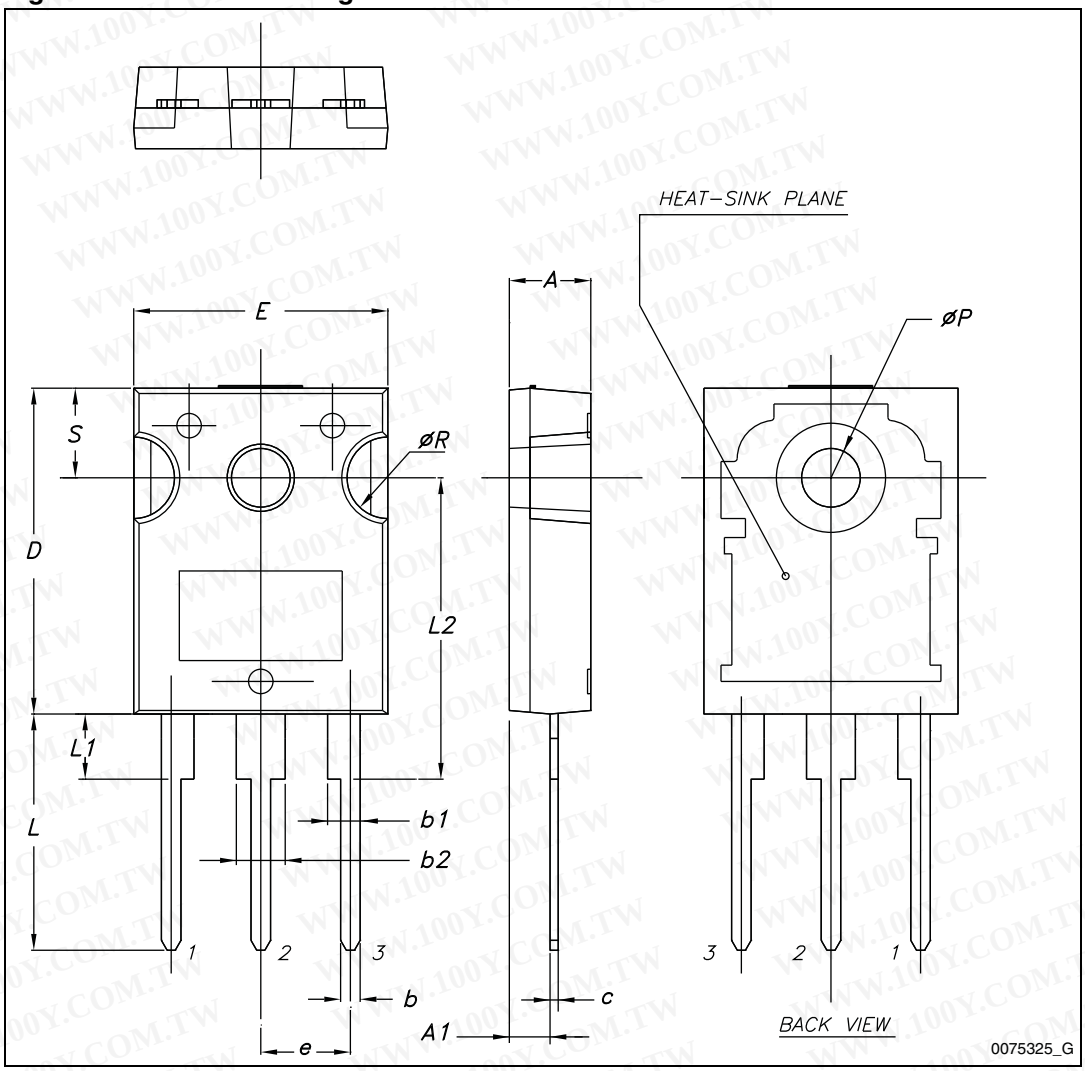

5 Packaging mechanical data

Table 11. D²PAK (TO-263) tape and reel mechanical data

Tape			Reel		
Dim.	mm		Dim.	mm	
	Min.	Max.		Min.	Max.
A0	10.5	10.7	A		330
B0	15.7	15.9	B	1.5	
D	1.5	1.6	C	12.8	13.2
D1	1.59	1.61	D	20.2	
E	1.65	1.85	G	24.4	26.4
F	11.4	11.6	N	100	
K0	4.8	5.0	T		30.4
P0	3.9	4.1			
P1	11.9	12.1	Base qty		1000
P2	1.9	2.1	Bulk qty		1000
R	50				
T	0.25	0.35			
W	23.7	24.3			

Figure 26. Tape

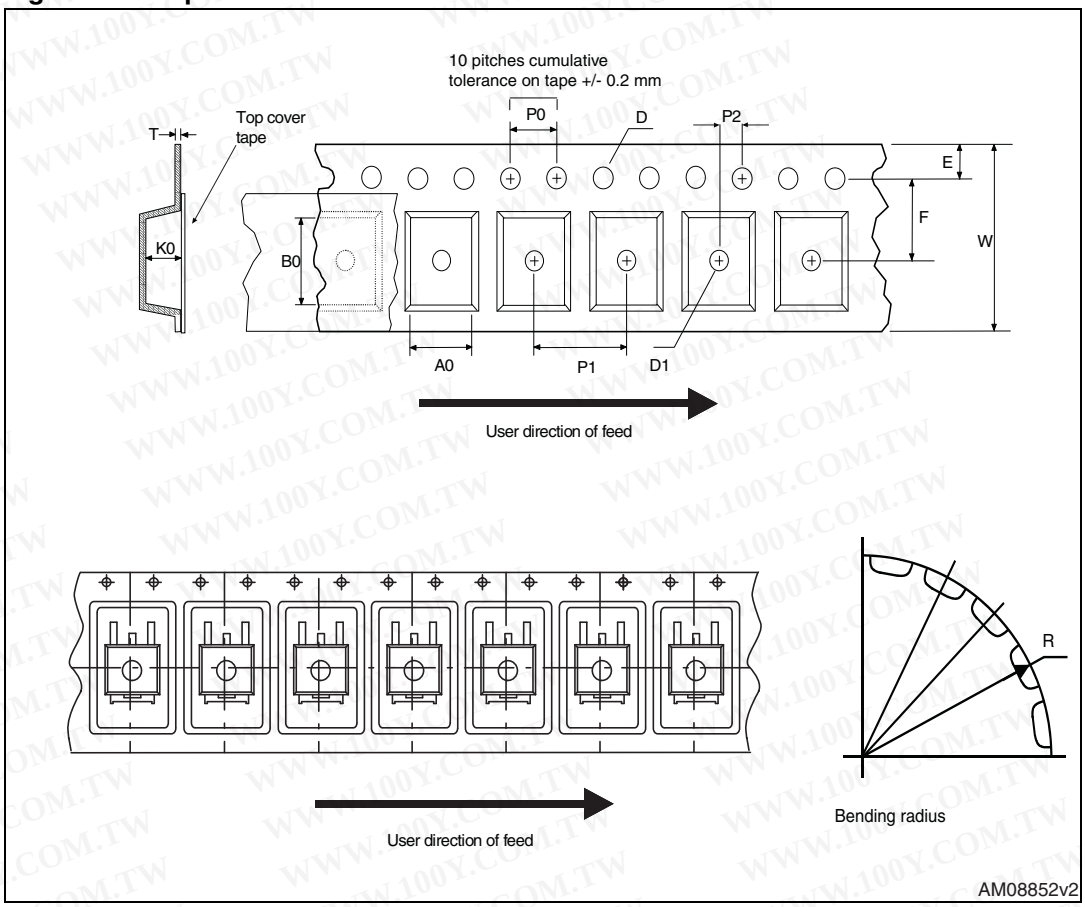

Figure 27. Reel

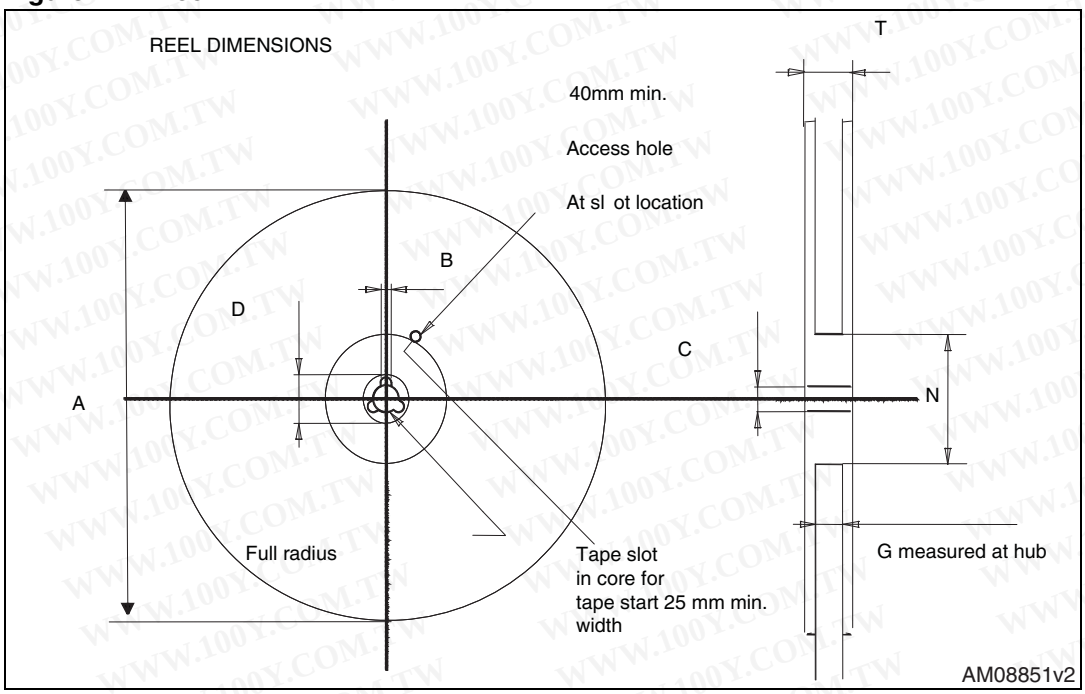

6 Revision history

Table 12. Document revision history

Date	Revision	Changes
28-Sep-2012	1	First release.

Please Read Carefully:

Information in this document is provided solely in connection with ST products. STMicroelectronics NV and its subsidiaries (“ST”) reserve the right to make changes, corrections, modifications or improvements, to this document, and the products and services described herein at any time, without notice.

All ST products are sold pursuant to ST’s terms and conditions of sale.

Purchasers are solely responsible for the choice, selection and use of the ST products and services described herein, and ST assumes no liability whatsoever relating to the choice, selection or use of the ST products and services described herein.

No license, express or implied, by estoppel or otherwise, to any intellectual property rights is granted under this document. If any part of this document refers to any third party products or services it shall not be deemed a license grant by ST for the use of such third party products or services, or any intellectual property contained therein or considered as a warranty covering the use in any manner whatsoever of such third party products or services or any intellectual property contained therein.

UNLESS OTHERWISE SET FORTH IN ST’S TERMS AND CONDITIONS OF SALE ST DISCLAIMS ANY EXPRESS OR IMPLIED WARRANTY WITH RESPECT TO THE USE AND/OR SALE OF ST PRODUCTS INCLUDING WITHOUT LIMITATION IMPLIED WARRANTIES OF MERCHANTABILITY, FITNESS FOR A PARTICULAR PURPOSE (AND THEIR EQUIVALENTS UNDER THE LAWS OF ANY JURISDICTION), OR INFRINGEMENT OF ANY PATENT, COPYRIGHT OR OTHER INTELLECTUAL PROPERTY RIGHT.

UNLESS EXPRESSLY APPROVED IN WRITING BY TWO AUTHORIZED ST REPRESENTATIVES, ST PRODUCTS ARE NOT RECOMMENDED, AUTHORIZED OR WARRANTED FOR USE IN MILITARY, AIR CRAFT, SPACE, LIFE SAVING, OR LIFE SUSTAINING APPLICATIONS, NOR IN PRODUCTS OR SYSTEMS WHERE FAILURE OR MALFUNCTION MAY RESULT IN PERSONAL INJURY, DEATH, OR SEVERE PROPERTY OR ENVIRONMENTAL DAMAGE. ST PRODUCTS WHICH ARE NOT SPECIFIED AS "AUTOMOTIVE GRADE" MAY ONLY BE USED IN AUTOMOTIVE APPLICATIONS AT USER’S OWN RISK.

Resale of ST products with provisions different from the statements and/or technical features set forth in this document shall immediately void any warranty granted by ST for the ST product or service described herein and shall not create or extend in any manner whatsoever, any liability of ST.

ST and the ST logo are trademarks or registered trademarks of ST in various countries.

Information in this document supersedes and replaces all information previously supplied.

The ST logo is a registered trademark of STMicroelectronics. All other names are the property of their respective owners.

STMicroelectronics group of companies

Australia - Belgium - Brazil - Canada - China - Czech Republic - Finland - France - Germany - Hong Kong - India - Israel - Italy - Japan - Malaysia - Malta - Morocco - Philippines - Singapore - Spain - Sweden - Switzerland - United Kingdom - United States of America

www.st.com