Low Cost, Voltage Output, High-Side, Current-Sense Amplifier

ADM4073

FEATURES

- Low cost, compact, current-sense solution
- 3 available gain versions
  - 20 V/V (ADM4073T)
  - 50 V/V (ADM4073F)
  - 100 V/V (ADM4073H)
- Typical ±1.0% full-scale accuracy
- Supply current: 500 µA
- Wide bandwidth: 1.8 MHz
- Operating supply: 3 V to 28 V
- Wide common-mode range: 2 V to 28 V
  - Independent of supply voltage
- Operating temperature range: −40°C to +125°C
- Available in a 6-lead SOT-23 package
- Pin-to-pin compatibility with the MAX4073

APPLICATIONS

- Cell phones
- PDAs
- Notebook computers
- Portable, battery-powered systems
- Smart battery packs and chargers
- Automotive
- Power management systems
- PA bias control
- General system-level, board-level current monitoring
- Precision current sources

FUNCTIONAL BLOCK DIAGRAM

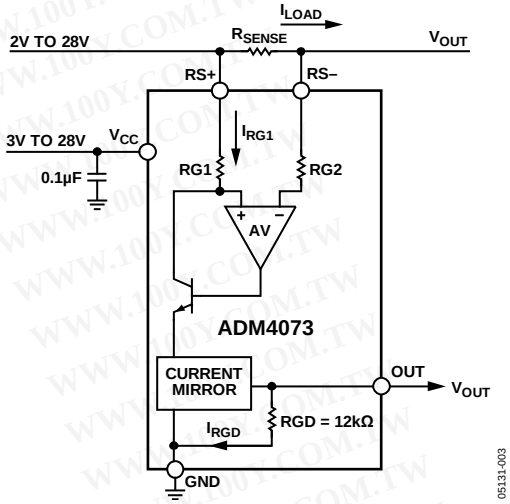

Figure 1.

APPLICATION DIAGRAM

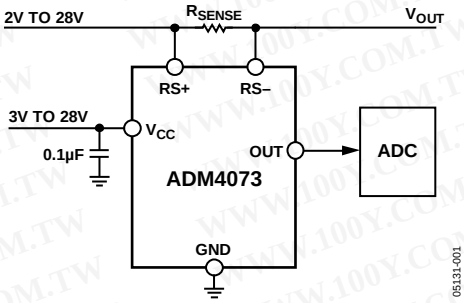

Figure 2.

GENERAL DESCRIPTION

The ADM4073 is a low cost, high-side, current-sense amplifier ideal for small portable applications, such as cell phones, notebook computers, PDAs, and other systems where current monitoring is required. The device is available in three different gain models, eliminating the need for gain-setting resistors. Because the ground path is not interrupted, the ADM4073 is particularly useful in rechargeable battery-powered systems, while its wide 1.8 MHz bandwidth makes it suitable for use inside battery-charger control loops. The input common-mode range of 2 V to 28 V is independent of the supply voltage.

The voltage on the output pin is determined by the current flowing through the selectable external sense resistor and the gain of the version selected. The operating range is 3 V to 28 V with a typical supply current of 500 µA.

The ADM4073 is available in a 6-lead SOT-23 package and is specified over the automotive operating temperature range (−40°C to +125°C).

勝 特 力 材 料 886-3-5753170
胜特力电子(上海) 86-21-34970699
胜特力电子(深圳) 86-755-83298787
Http://www.100y.com.tw

Rev. A

Information furnished by Analog Devices is believed to be accurate and reliable. However, no responsibility is assumed by Analog Devices for its use, nor for any infringements of patents or other rights of third parties that may result from its use. Specifications subject to change without notice. No license is granted by implication or otherwise under any patent or patent rights of Analog Devices. Trademarks and registered trademarks are the property of their respective owners.

One Technology Way, P.O. Box 9106, Norwood, MA 02062-9106, U.S.A.
Tel: 781.329.4700 www.analog.com
Fax: 781.461.3113

©2006–2008 Analog Devices, Inc. All rights reserved.

TABLE OF CONTENTS

Features 1
Applications 1
Functional Block Diagram 1
Application Diagram 1
General Description 1
Revision History 2
Specifications 3
Absolute Maximum Ratings 4
Thermal Characteristics 4
ESD Caution 4
Pin Configuration and Function Descriptions 5
Typical Performance Characteristics 6
Theory of Operation 10
R_{SENSE} 10
Output (OUT) 10
Outline Dimensions 11
Ordering Guide 11

REVISION HISTORY

10/08—Rev. 0 to Rev. A

Changes to Theory of Operation Section and Output (OUT) Section 10
Changes to Ordering Guide 11

7/06—Revision 0: Initial Version

SPECIFICATIONS

V_{RS+} = 2 V to 28 V, V_{SENSE} = (V_{RS+} − V_{RS-}) = 0 V, V_{CC} = 3 V to 28 V, T_A = −40°C to +125°C, unless otherwise noted. Typical values are at T_A = 25°C.[1]

Table 1.

Parameter	Min	Typ	Max	Unit	Conditions
POWER SUPPLY					
Operating Voltage Range, V_{CC}	3		28	V	Inferred from PSRR test
Common-Mode Input Range, V_{CMR}	2		28	V	Inferred OUT voltage error test
Common-Mode Input Rejection, CMR		90		dB	V_{SENSE} = 100 mV, V_{CC} = 12 V
Supply Current, I_{CC}		0.5	1.2	mA	V_{CC} = 28 V
Leakage Current, I_{RS+}/I_{RS-}		0.05	2	µA	V_{CC} = 0 V, V_{RS+} = 28 V, T_A = 85°C
Input Bias Current, I_{RS+}		20	60	µA	
Input Bias Current, I_{RS-}		40	120	µA	
Full-Scale Sense Voltage, V_{SENSE}		150		mV	V_{SENSE} = (V_{RS+} − V_{RS-})
Total Output Voltage Error[2]		±1		%	V_{SENSE} = 100 mV, V_{CC} = 12 V, V_{RS+} = 2 V
		±1.0	±5.0	%	V_{SENSE} = 100 mV, V_{CC} = 12 V, V_{RS+} = 12 V, T_A = +25°C
			±5.0	%	V_{SENSE} = 100 mV, V_{CC} = 12 V, V_{RS} = 12V, T_A = −40°C to +125°C
		±1.0	±5.0	%	V_{SENSE} = 100 mV, V_{CC} = 28 V, V_{RS} = 28 V, T_A = +25°C
			±5.0	%	V_{SENSE} = 100 mV, V_{CC} = 28 V, V_{RS} = 28 V, T_A = −40°C to +125°C
		±7.5		%	V_{SENSE} = 6.25 mV,[3] V_{CC} = 12 V, V_{RS} = 12 V
Extrapolated Input Offset Voltage, V_{OS}		1.0		mV	V_{CC} = V_{RS+} = 12 V, V_{SENSE} > 10 mV
Output High Voltage (V_{CC} − V_{OH})		0.8	1.2	V	V_{CC} = 3 V, V_{SENSE} = 150 mV (ADM4073T)
		0.8	1.2	V	V_{CC} = 7.5 V, V_{SENSE} = 150 mV (ADM4073F)
		0.8	1.2	V	V_{CC} = 15 V, V_{SENSE} = 150 mV (ADM4073H), T_A = 25°C
DYNAMIC CHARACTERISTICS					
Bandwidth, BW		1.8		MHz	V_{SENSE} = 100 mV, V_{CC} = 12 V, V_{RS+} = 12 V, C_{LOAD} = 5 pF (ADM4073T)
		1.7		MHz	V_{SENSE} = 100 mV, V_{CC} = 12 V, V_{RS+} = 12 V, C_{LOAD} = 5 pF (ADM4073F)
		1.6		MHz	V_{SENSE} = 100 mV, V_{CC} = 12 V, V_{RS+} = 12 V, C_{LOAD} = 5 pF (ADM4073H)
		600		kHz	V_{SENSE} = 6.25 mV,[3] V_{CC} = 12 V, V_{RS+} = 12 V, C_{LOAD} = 5 pF (ADM4073T/F/H)
Gain, A_V		20		V/V	ADM4073T
		50		V/V	ADM4073F
		100		V/V	ADM4073H
Gain Accuracy		±1.0	±2.0	%	V_{SENSE} = 10 mV to 150 mV, V_{CC} = 12 V, V_{RS+} = 12 V, T_A = +25°C (ADM4073T/F)
			±2.0	%	V_{SENSE} = 10 mV to 150 mV, V_{CC} = 12 V, V_{RS+} = 12 V, T_A = −40°C to +125°C (ADM4073T/F)
		±1.0	±1.5	%	V_{SENSE} = 10 mV to 100 mV, V_{CC} = 12 V, V_{RS+} = 12 V, T_A = +25°C (ADM4073H)
			±3.0	%	V_{SENSE} = 10 mV to 100 mV, V_{CC} = 12 V, V_{RS+} = 12 V, T_A = −40°C to +125°C (ADM4073H)
OUT Settling Time to 1% of Final Value		400		ns	V_{SENSE} = 6.25 mV to 100 mV, V_{CC} = 12 V, V_{RS+} = 12 V, C_{LOAD} = 5 pF
		800		ns	V_{SENSE} = 100 mV to 6.25 mV, V_{CC} = 12 V, V_{RS+} = 12 V, C_{LOAD} = 5 pF
Output Resistance, R_{OUT}		12		kΩ	
Power Supply Rejection Ratio, PSRR		78		dB	V_{SENSE} = 60 mV, V_{CC} = 3 V to 28 V (ADM4073T)
		85		dB	V_{SENSE} = 24 mV, V_{CC} = 3 V to 28 V (ADM4073F)
		90		dB	V_{SENSE} = 12 mV, V_{CC} = 3 V to 28 V (ADM4073H)
Power-Up Time[4]		5		µs	C_{LOAD} = 5 pF, V_{SENSE} = 100 mV
Saturation Recovery Time[5]		5		µs	C_{LOAD} = 5 pF, V_{CC} = 12 V, V_{RS+} = 12 V

[1] 100% production tested at T_A = 25°C. Specifications over temperature limit are guaranteed by design.
[2] The sum of the gain and offset errors is the total OUT voltage error.
[3] 6.25 mV = 1/16th of 100 mV full-scale sense voltage.
[4] Output settles to within 1% of final value.
[5] When overdriven, this device does not experience phase reversal.

ABSOLUTE MAXIMUM RATINGS

Table 2.

Parameter	Rating
V_{CC} to GND	−0.3 V to +30 V
RS+, RS− to GND	−0.3 V to +30 V
OUT to GND	−0.3 V to (V_{CC} + 0.3 V)
OUT Short-Circuit to GND	Continuous
Differential Input Voltage ($V_{RS+} - V_{RS-}$)	±5 V
Current into Any Pin	±20 mA
Storage Temperature Range	−65°C to +125°C
Operating Temperature Range	−40°C to +125°C
Lead Temperature, Soldering (10 sec)	300°C
Junction Temperature	150°C

Stresses above those listed under Absolute Maximum Ratings may cause permanent damage to the device. This is a stress rating only; functional operation of the device at these or any other conditions above those indicated in the operational section of this specification is not implied. Exposure to absolute maximum rating conditions for extended periods may affect device reliability.

THERMAL CHARACTERISTICS

θ_{JA} is specified for the worst-case conditions, that is, a device soldered in a circuit board for surface-mount packages.

Table 3. Thermal Resistance

Package Type	θ_{JA}	Unit
6-Lead SOT-23	169.5	°C/W

ESD CAUTION

ESD (electrostatic discharge) sensitive device. Charged devices and circuit boards can discharge without detection. Although this product features patented or proprietary protection circuitry, damage may occur on devices subjected to high energy ESD. Therefore, proper ESD precautions should be taken to avoid performance degradation or loss of functionality.

PIN CONFIGURATION AND FUNCTION DESCRIPTIONS

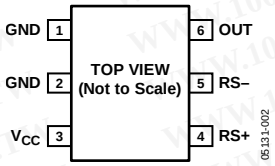

Figure 3. Pin Configuration

Table 4. Pin Function Descriptions

Pin No.	Mnemonic	Description
1	GND	Chip Ground Pin.
2	GND	Chip Ground Pin.
3	V_{CC}	Chip Power Supply. Requires a 0.1 µF capacitor to ground.
4	RS+	Power-Side Connection to the External Sense Resistor.
5	RS–	Load-Side Connection to the External Sense Resistor.
6	OUT	Voltage Output. V_{OUT} is proportional to V_{SENSE}. Output impedance is approximately 12 kΩ.

TYPICAL PERFORMANCE CHARACTERISTICS

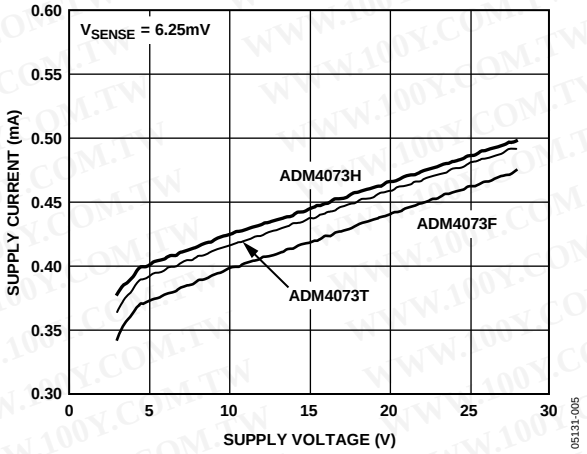

Figure 4. Supply Current vs. Supply Voltage (V_{SENSE} = 6.25 mV)

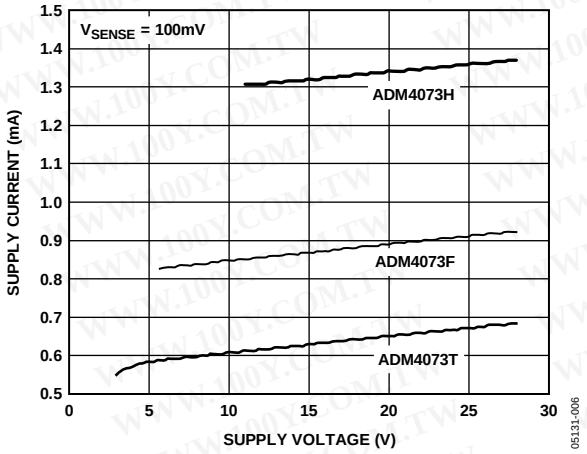

Figure 5. Supply Current vs. Supply Voltage (V_{SENSE} = 100 mV)

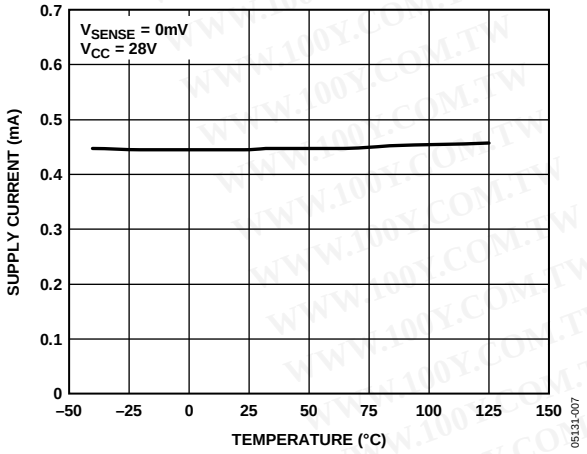

Figure 6. Supply Current vs. Temperature

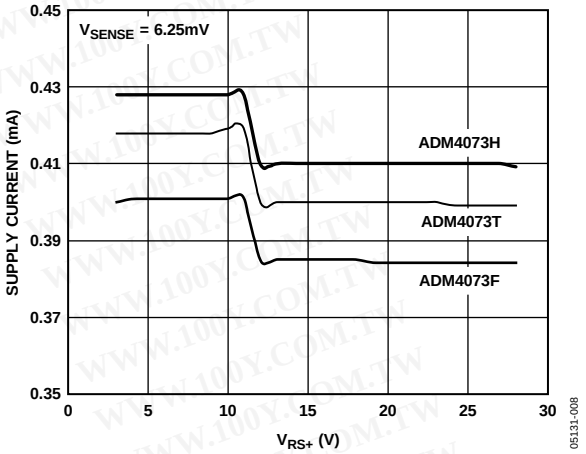

Figure 7. Supply Current vs. RS+ Voltage (V_{SENSE} = 6.25 mV)

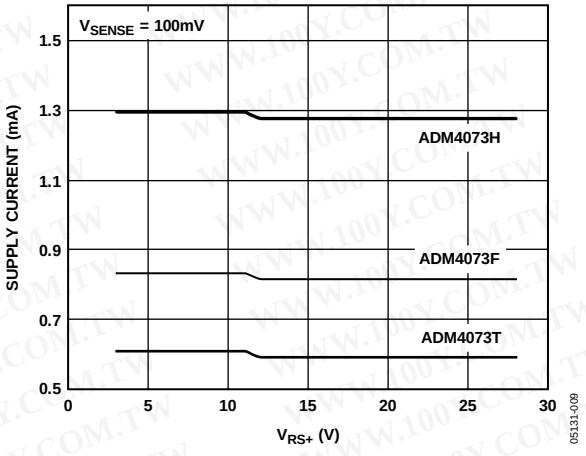

Figure 8. Supply Current vs. RS+ Voltage (V_{SENSE} = 100 mV)

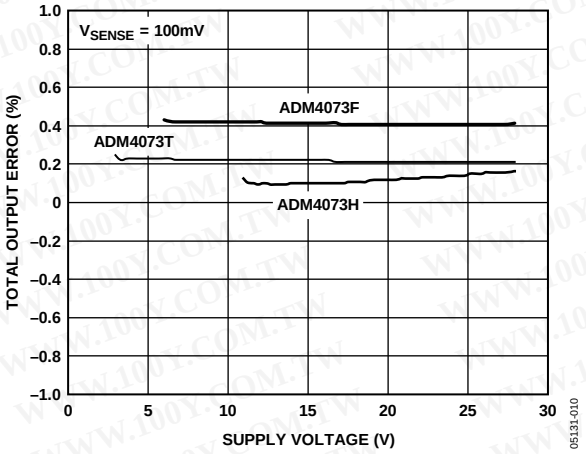

Figure 9. Total Output Error vs. Supply Voltage (V_{SENSE} = 100 mV)

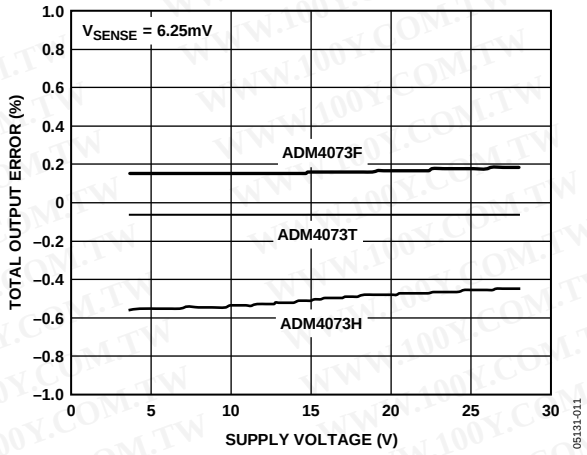

Figure 10. Total Output Error vs. Supply Voltage (V_{SENSE} = 6.25 mV)

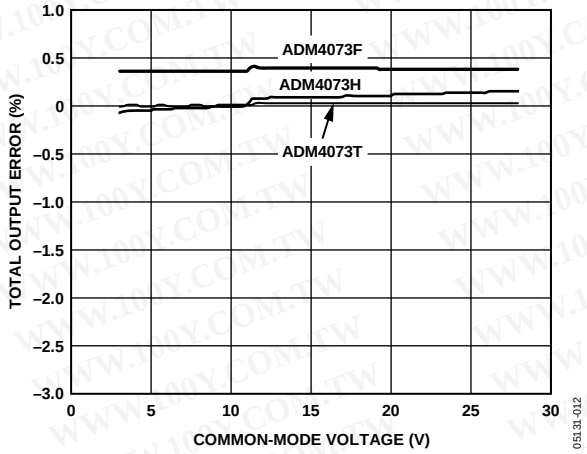

Figure 11. Total Output Error vs. Common-Mode Voltage

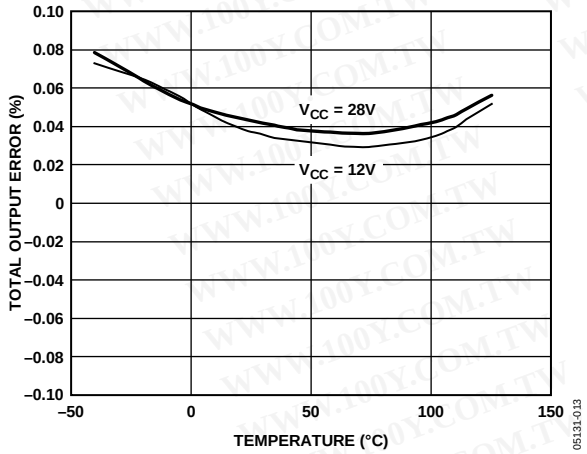

Figure 12. Total Output Error vs. Temperature

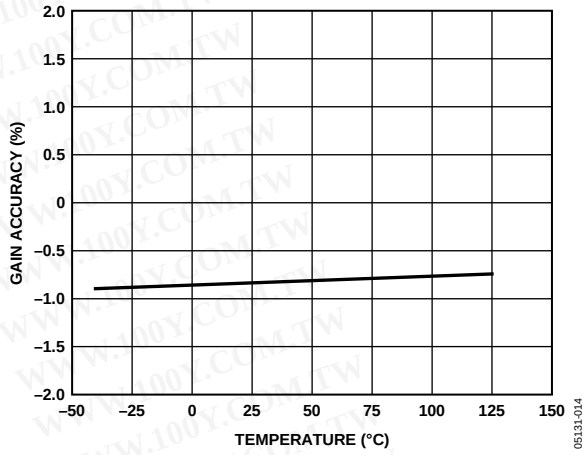

Figure 13. Gain Accuracy vs. Temperature

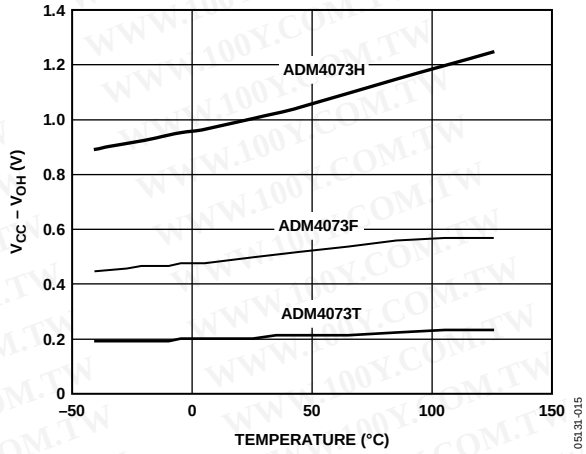

Figure 14. Output High Voltage (V_{CC} – V_{OH}) vs. Temperature

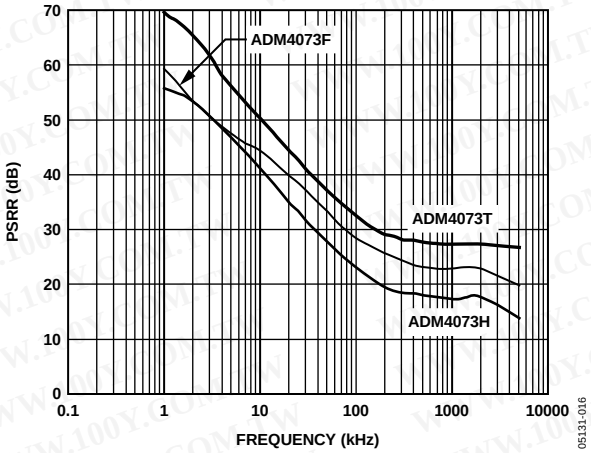

Figure 15. PSRR vs. Frequency

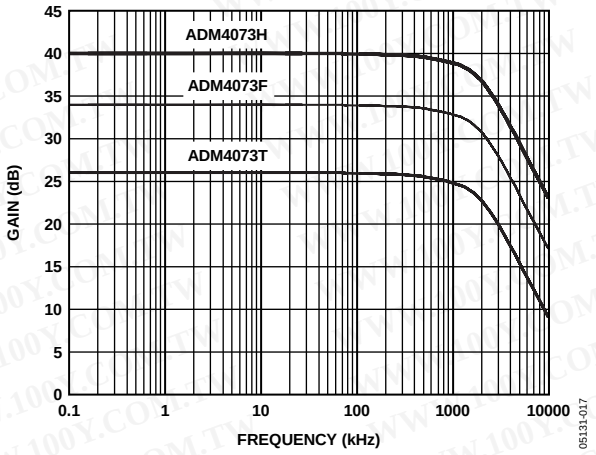

Figure 16. Small Signal Gain vs. Frequency

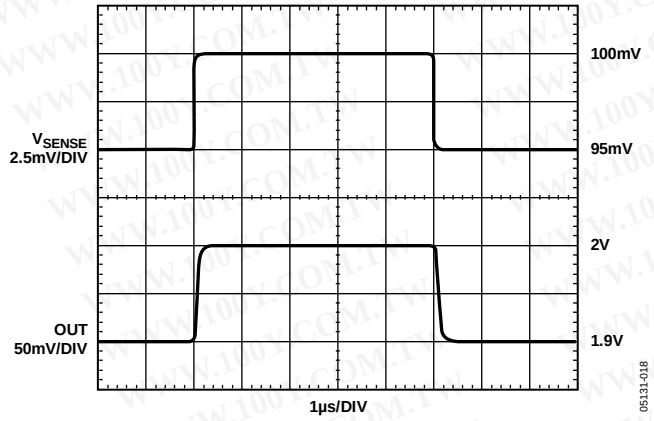

Figure 17. ADM4073T Small Signal Transient Response

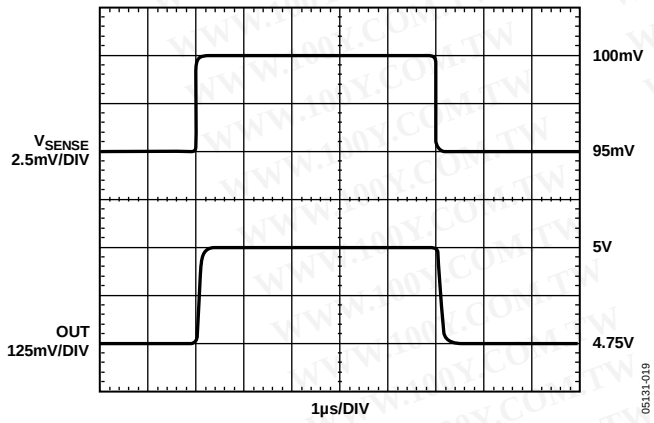

Figure 18. ADM4073F Small Signal Transient Response

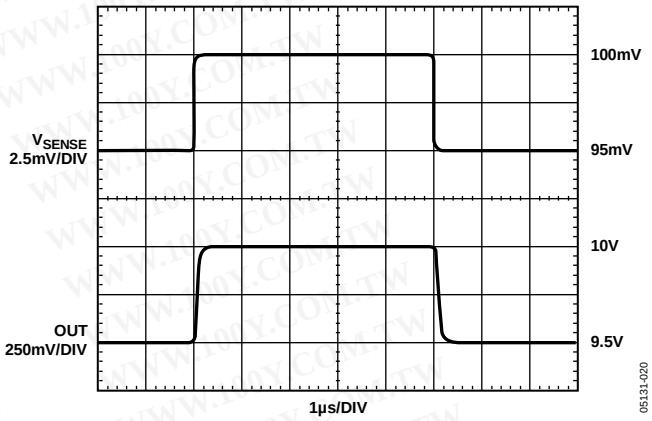

Figure 19. ADM4073H Small Signal Transient Response

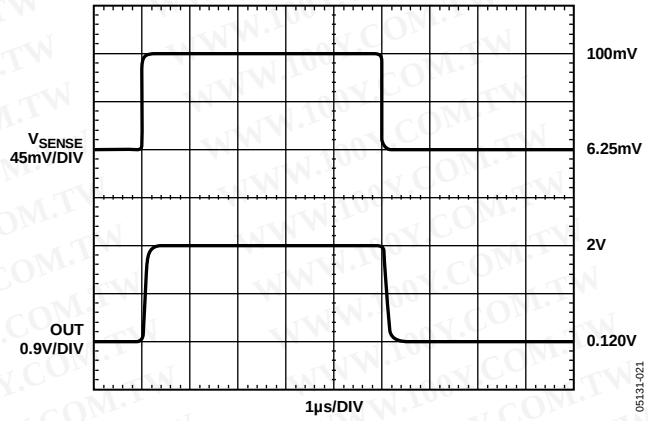

Figure 20. ADM4073T Large Signal Transient Response

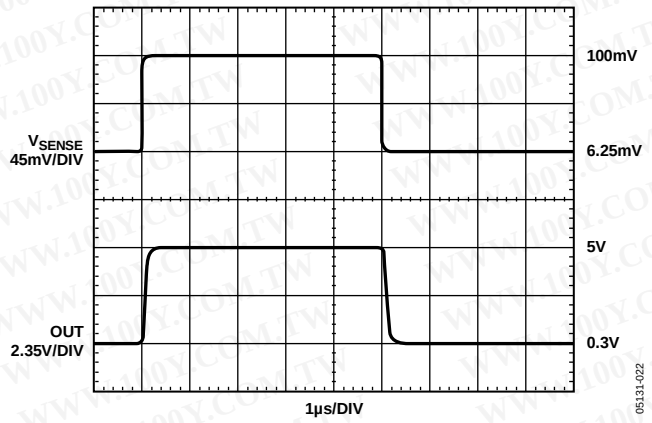

Figure 21. ADM4073F Large Signal Transient Response

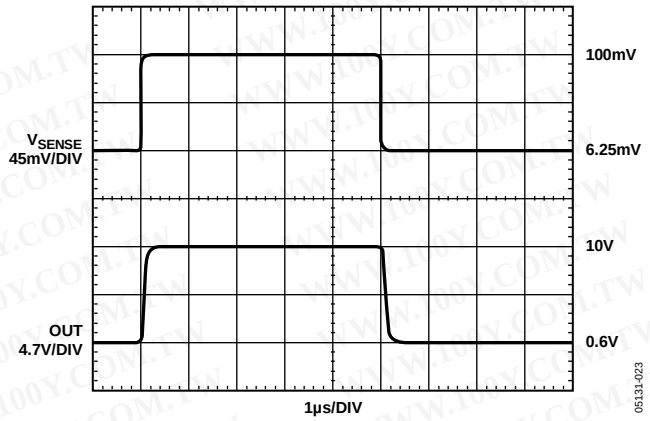

Figure 22. ADM4073H Large Signal Transient Response

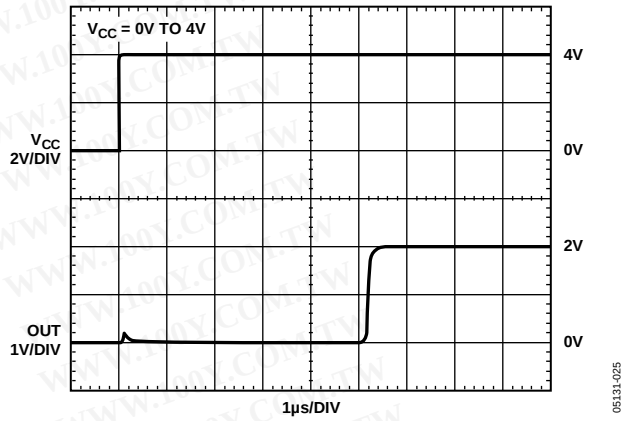

Figure 24. ADM4073T Start-Up Delay

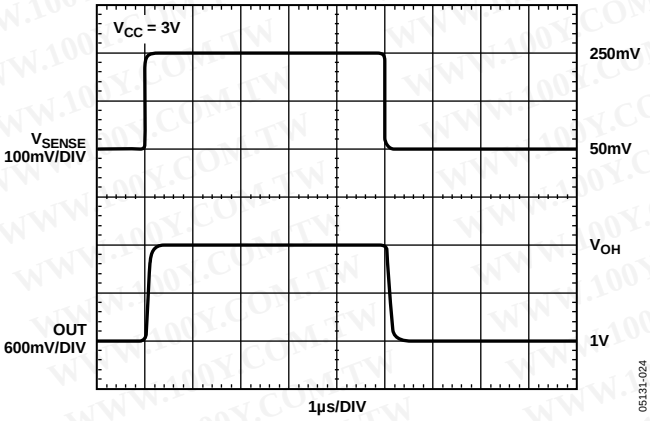

Figure 23. ADM4073T Overdrive Response

THEORY OF OPERATION

The current from the source flows through R_{SENSE}, which generates a voltage drop, V_{SENSE}, across the RS+ and RS− terminals of the sense amplifier. The Input Stage Amplifier A1 regulates its inputs to be equal, thereby shunting a current proportional to V_{SENSE}/R_{G1} to the output current mirror. This current is then multiplied by a gain factor of b in the output stage current mirror and flows through R_{GD} to generate V_{OUT}. Therefore, V_{OUT} is related to V_{SENSE} by the ratio of R_{G1} to R_{GD} and the current gain of b.

$$V_{OUT} = A_V \times V_{SENSE}$$

where:

$A_V = R_{GD}/R_{G1} \times b$

A_v is equal to different voltages depending upon the model of the device.

- 20 V/V for ADM4073T.
- 50 V/V for ADM4073F.
- 100 V/V for ADM4073H.

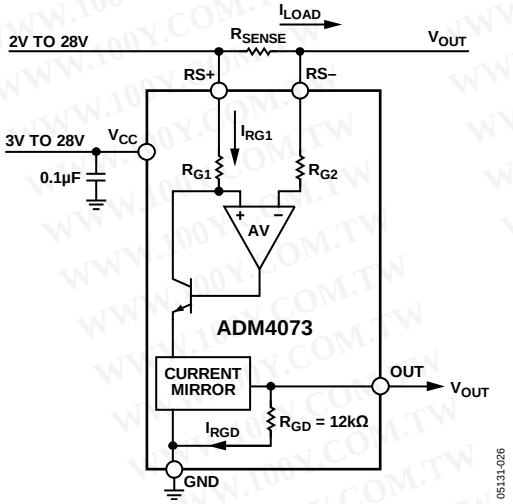

Figure 25. Functional Block Diagram

R_{SENSE}

The ADM4073 has the ability to sense a wide variety of currents by selecting a particular sense resistor. Select a suitable output voltage for full-scale current, such as 10 V for 10 A. Then, select a gain model that gives the most efficient use of the sense voltage range (150 mV max).

In the example above, using the ADM4073H (gain of 100) gives an output voltage of 10 V when the sense voltage is 100 mV. Use the following equation to determine what value of sense resistor gives 100 mV with 10 A flowing through it:

R_{SENSE} = 100 mV/10 A

R_{SENSE} = 10 mΩ

$V_{OUT} = (I_{LOAD} \times R_{SENSE}) \times A_V$

To measure lower currents accurately, use as large a sense resistor as possible to utilize the higher end of the sense voltage range. This reduces the effects of the offset voltage errors in the internal amplifier.

When currents are very large, it is important to take the I^2R power losses across the sense resistor into account. If the sense resistor's rated power dissipation is not sufficient, its value can drift, giving an inaccurate output voltage or it could fail altogether. This, in turn, causes the voltage across the RS+ and RS− pins to exceed the absolute maximum ratings.

If the monitored supply rail has a large amplitude high frequency component, choose a sense resistor with low inductance.

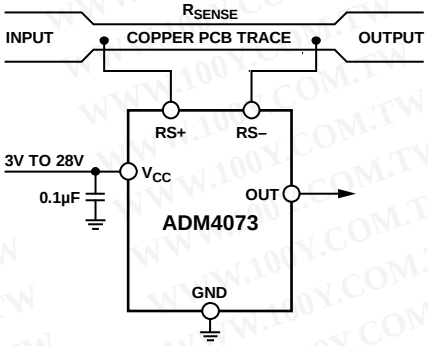

Figure 26. Using PCB Trace for Current Sensing

OUTPUT (OUT)

The output stage of the ADM4073 is a current source driving a pull-down resistance. To ensure optimum accuracy, care must be taken not to load this output externally. To minimize output errors, ensure OUT is connected to a high impedance input stage. If this is not possible, output buffering is recommended.

The percent error introduced by output loading is determined with the following formula:

$$\%\ Error = 100\left(1 - R_{LOAD}/\left(R_{OUT_INT} + R_{LOAD}\right)\right)$$

where:

R_{LOAD} is the external load applied to OUT.

R_{OUT_INT} is the internal output resistance (12 kΩ).

OUTLINE DIMENSIONS

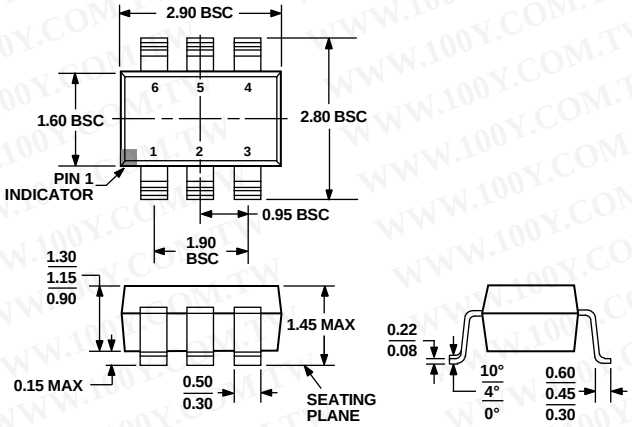

COMPLIANT TO JEDEC STANDARDS MO-178-AB

Figure 27. 6-Lead Small Outline Transistor Package [SOT-23]
(RJ-6)
Dimensions shown in millimeters

ORDERING GUIDE

Model	Gain	Temperature Range	Package Description	Package Option	Branding
ADM4073TWRJZ-REEL7[1]	20	−40°C to +125°C	6-Lead SOT-23	RJ-6	M2E
ADM4073FWRJZ-REEL7[1]	50	−40°C to +125°C	6-Lead SOT-23	RJ-6	M2C
ADM4073HWRJZ-REEL7[1]	100	−40°C to +125°C	6-Lead SOT-23	RJ-6	M2D
ADM4073WFWRJZ-RL7[1, 2]	50	−40°C to +125°C	6-Lead SOT-23	RJ-6	M2C

[1] Z = RoHS Compliant Part.
[2] Automotive Grade.

NOTES

勝 特 力 材 料 886-3-5753170
胜特力电子(上海) 86-21-34970699
胜特力电子(深圳) 86-755-83298787
Http://www.100y.com.tw

©2006–2008 Analog Devices, Inc. All rights reserved. Trademarks and registered trademarks are the property of their respective owners.
D05131-0-10/08(A)