MCP6001/1R/1U/2/4

1 MHz, Low-Power Op Amp

Features

- Available in SC-70-5 and SOT-23-5 packages
- Gain Bandwidth Product: 1 MHz (typical)
- Rail-to-Rail Input/Output
- Supply Voltage: 1.8V to 6.0V
- Supply Current: I_Q = 100 µA (typical)
- Phase Margin: 90° (typical)
- Temperature Range:
  - Industrial: -40°C to +85°C
  - Extended: -40°C to +125°C
- Available in Single, Dual and Quad Packages

Applications

- Automotive
- Portable Equipment
- Photodiode Amplifier
- Analog Filters
- Notebooks and PDAs
- Battery-Powered Systems

勝 特 力 材 料 886-3-5753170
胜特力电子(上海) 86-21-34970699
胜特力电子(深圳) 86-755-83298787
Http://www.100y.com.tw

Design Aids

- SPICE Macro Models
- FilterLab® Software
- Mindi™ Circuit Designer & Simulator
- Microchip Advanced Part Selector (MAPS)
- Analog Demonstration and Evaluation Boards
- Application Notes

Typical Application

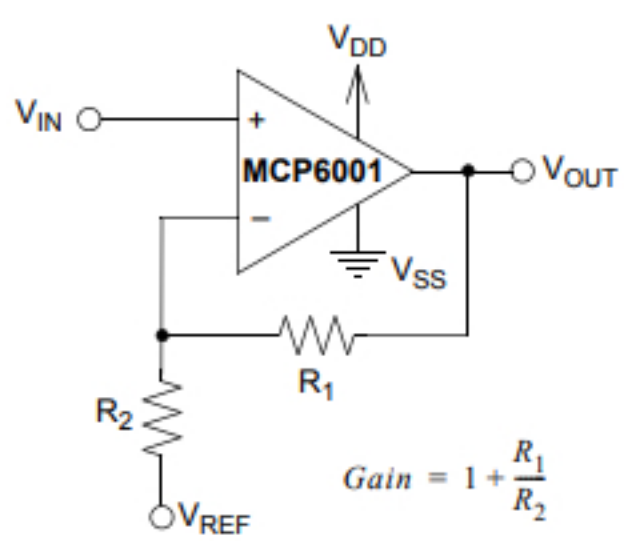

Non-Inverting Amplifier

Description

The Microchip Technology Inc. MCP6001/2/4 family of operational amplifiers (op amps) is specifically designed for general-purpose applications. This family has a 1 MHz Gain Bandwidth Product (GBWP) and 90° phase margin (typical). It also maintains 45° phase margin (typical) with a 500 pF capacitive load. This family operates from a single supply voltage as low as 1.8V, while drawing 100 µA (typical) quiescent current. Additionally, the MCP6001/2/4 supports rail-to-rail input and output swing, with a Common-mode input voltage range of V_{DD} + 300 mV to V_{SS} – 300 mV. This family of op amps is designed with Microchip's advanced CMOS process.

The MCP6001/2/4 family is available in the industrial and extended temperature ranges, with a power supply range of 1.8V to 6.0V.

Package Types

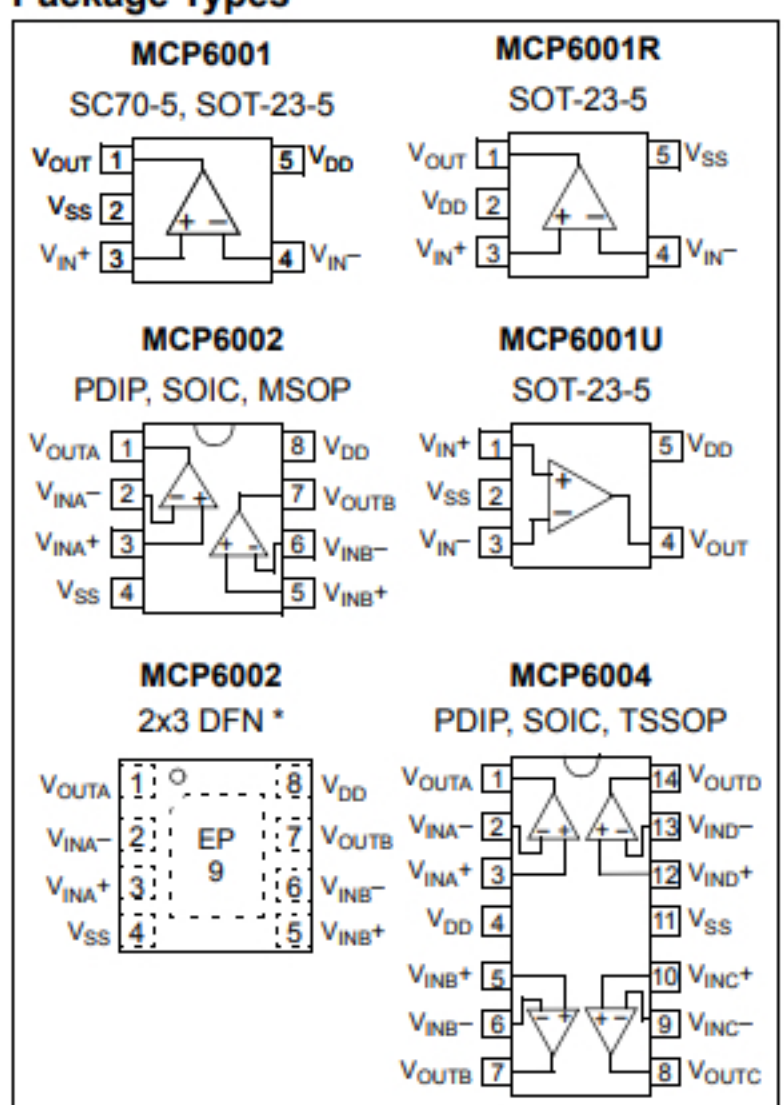

* Includes Exposed Thermal Pad (EP); see Table 3-1.

5-Lead Plastic Small Outline Transistor (OT) [SOT23]

Note: For the most current package drawings, please see the Microchip Packaging Specification located at http://www.microchip.com/packaging

勝 特 力 材 料 886-3-5753170
胜特力电子(上海) 86-21-34970699
胜特力电子(深圳) 86-755-83298787
Http://www.100y.com.tw

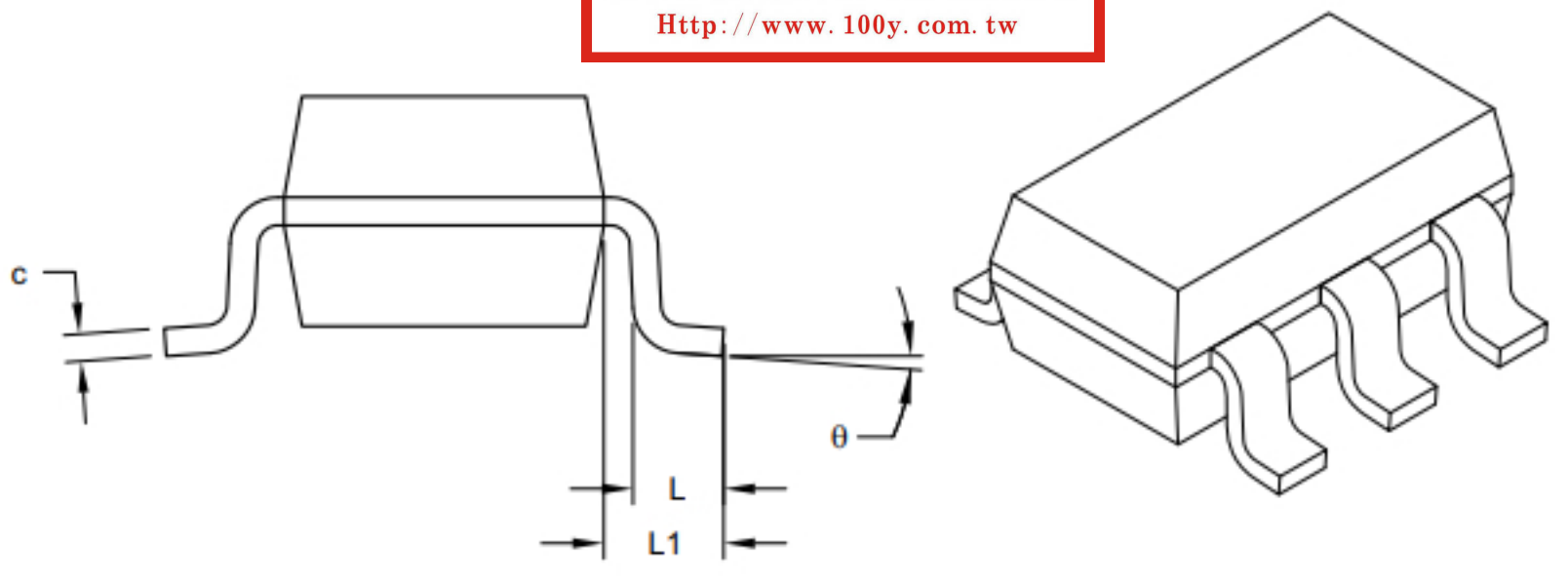

VIEW A-A
SHEET 1

Units		MILLIMETERS		
Dimension Limits		MIN	NOM	MAX
Number of Pins	N	5		
Pitch	e	0.95 BSC		
Outside lead pitch	e1	1.90 BSC		
Overall Height	A	0.90	-	1.45
Molded Package Thickness	A2	0.89	-	1.30
Standoff	A1	-	-	0.15
Overall Width	E	2.80 BSC		
Molded Package Width	E1	1.60 BSC		
Overall Length	D	2.90 BSC		
Foot Length	L	0.30	-	0.60
Footprint	L1	0.60 REF		
Foot Angle	ϕ	0°	-	10°
Lead Thickness	c	0.08	-	0.26
Lead Width	b	0.20	-	0.51

Notes:

1. Dimensions D and E1 do not include mold flash or protrusions. Mold flash or protrusions shall not exceed 0.25mm per side.
2. Dimensioning and tolerancing per ASME Y14.5M
   BSC: Basic Dimension. Theoretically exact value shown without tolerances.
   REF: Reference Dimension, usually without tolerance, for information purposes only.

Microchip Technology Drawing C04-091-OT Rev E Sheet 2 of 2