NEC

BIPOLAR ANALOG INTEGRATED CIRCUIT

μPC4558

勝 特 力 材 料 886-3-5773766
胜特力电子(上海) 86-21-34970699
胜特力电子(深圳) 86-755-83298787
Http://www.100y.com.tw

HIGH PERFORMANCE DUAL OPERATIONAL AMPLIFIER

DESCRIPTION

The μPC4558 is a dual type operational amplifier having internal phase compensating circuits, its electrical characteristics features higher speed, broader bandwidth, and lower noise compared with such conventional general purpose operational amplifier as μPC741.

Therefore, application to active filters, audio amplifiers, VCO, etc. can be realized with simple circuit composition.

FEATURES

- Internal frequency compensation
- Low noise
- Output short circuit protection

EQUIVALENT CIRCUIT

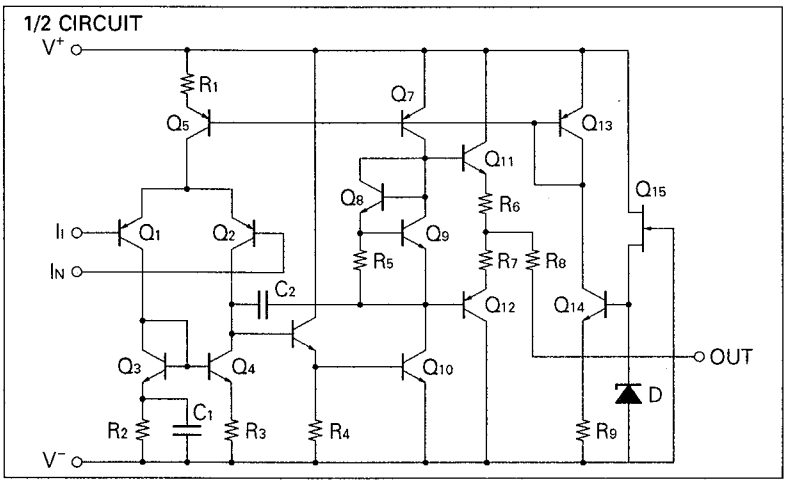

CONNECTION DIAGRAM (Top View)

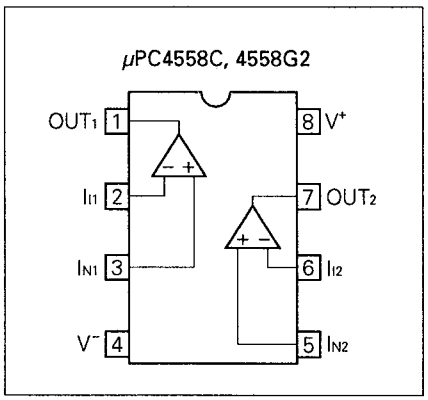

ORDERING INFORMATION

PART NUMBER	PACKAGE	QUALITY GRADE
μPC4558C	8 PIN PLASTIC DIP (300 mil)	Standard
μPC4558G2	8 PIN PLASTIC SOP (225 mil)	Standard

Please refer to "Quality grade on NEC Semiconductor Devices" (Document number IEI-1209) published by NEC Corporation to know the specifications of quality grade on the devices and its recommended applications.

Document No. IC-1192B
(O.D. No. IC-5394E)
Date Published March 1993 M
Printed in Japan

ABSOLUTE MAXIMUM RATINGS (T_a = 25 °C)

PARAMETER			SYMBOL	μPC4558	UNIT
Voltage between V^+ and V^-		(Note 1)	$V^+ - V^-$	−0.3 to +36	V
Differential Input Voltage			V_{ID}	±30	V
Input Voltage		(Note 2)	V_I	V^- −0.3 to V^+ +0.3	V
Output Voltage		(Note 3)	V_O	V^- −0.3 to V^+ +0.3	V
Power Dissipation	C Package	(Note 4)	P_T	350	mW
	G2 Package	(Note 5)		440	mW
Output Short Circuit Duration		(Note 6)		Indefinite	sec
Operating Temperature Range			T_{opt}	−20 to +80	°C
Storage Temperature Range			T_{stg}	−55 to +125	°C

Note 1. Reverse connection of supply voltage can cause destruction.

Note 2. The input voltage should be allowed to input without damage or destruction. Even during the transition period of supply voltage, power on/off etc., this specification should be kept. The normal operation will establish when the both inputs are within the Common Mode Input Voltage Range of electrical characteristics.

Note 3. This specification is the voltage which should be allowed to supply to the output terminal from external without damage or destructive. Even during the transition period of supply voltage, power on/off etc., this specification should be kept. The output voltage of normal operation will be the Output Voltage Swing of electrical characteristics.

Note 4. Thermal derating factor is −5.0 mV / °C when ambient temperature is higher than 55 °C.

Note 5. Thermal derating factor is −4.4 mV / °C when ambient temperature is higher than 25 °C.

Note 6. Pay careful attention to the total power dissipation not to exceed the absolute maximum ratings, Note 4 and Note 5.

RECOMMENDED OPERATING CONDITIONS

CHARACTERISTIC	SYMBOL	MIN.	TYP.	MAX.	UNIT
Supply Voltage	$V^{\pm}$	± 4		± 16	V

ELECTRICAL CHARACTERISTICS (T_a = 25 °C, $V^{\pm}$ = ±15 V)

CHARACTERISTIC	SYMBOL	MIN.	TYP.	MAX.	UNIT	TEST CONDITION
Input Offset Voltage	V_{IO}		±0.5	±6.0	mV	Rs ≦ 10 kΩ
Input Offset Current (Note 7)	I_{IO}		±5	±200	nA	
Input Bias Current (Note 7)	I_B		60	500	nA	
Large Signal Voltage Gain	A_v	20,000	100,000			R_L ≧ 2 kΩ, Vo = ±10 V
Power Consumption	P_d		90	170	mW	Io = 0 A, Both Amplifiers
Common Mode Rejection Ratio	CMR	70	90		dB	Rs ≦ 10 kΩ
Source Variation Rejection Ratio	SVR		30	150	μV/V	Rs ≦ 10 kΩ
Output Voltage Swing	V_{om}	±12	±14		V	R_L ≧ 10 kΩ
Output Voltage Swing	V_{om}	±10	±13		V	R_L ≧ 2 kΩ
Common Mode Input Voltage Range	V_{ICM}	±12	±14		V	
Slew Rate	SR		1.0		V/μs	A_v = 1
Input Equivalent Noise Voltage	V_n		6		μV_{p-p}	Rs = 1 kΩ, f = 1 Hz to 1 kHz (Fig.1)
Channel Separation			105		dB	f = 1 kHz (Fig.2)

Note 7. Input bias currents flow out from IC. Because each currents are base current of PNP-transistor on input stage.

When using these ICs, pay careful attention to the following points.

1. The total of the internal power dissipation, when the loads of both channels are short-circuited at the same time.
2. The likelihood of interference between the channels, due to the temperature gradient of the chip, when the internal power dissipation of the left and right channels differ greatly in circuits handling low level inputs.

MEASUREMENT CIRCUIT

Fig. 1 Noise Measurement Circuit

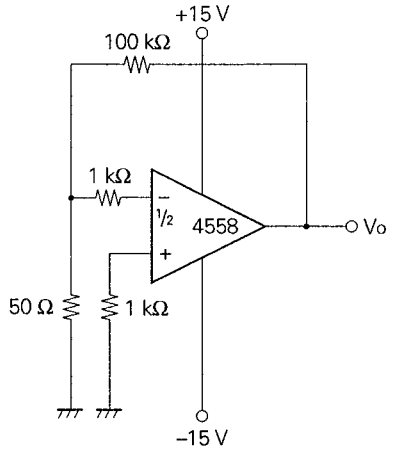

$$V_N = \frac{V_O}{2000}$$

Fig. 2 Channel Separation Measurement Circuit

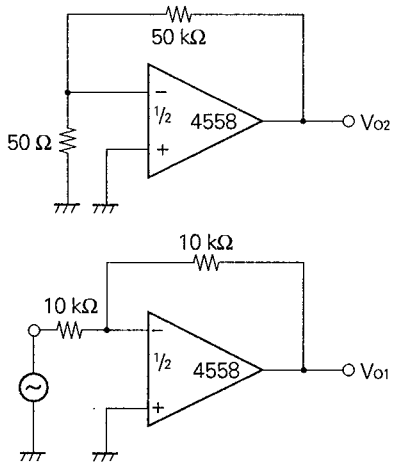

Channel separation

$$= \left| 20 \cdot \log \left(\frac{1}{1000} \cdot \frac{V_{O2}}{V_{O1}} \right) \right|$$

TYPICAL PERFORMANCE CHARACTERISTICS (T_a = 25 °C, TYP.)

POWER DISSIPATION

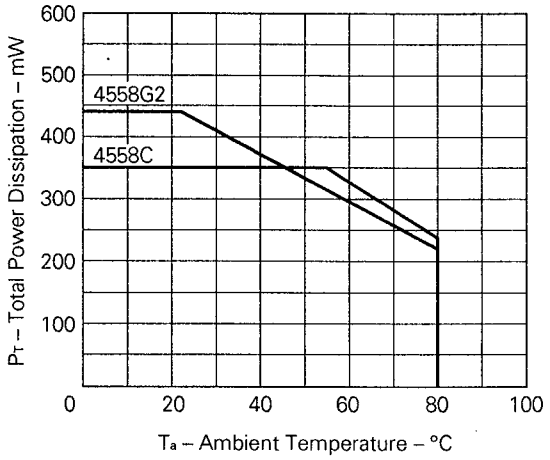

OPEN LOOP FREQUENCY RESPONSE

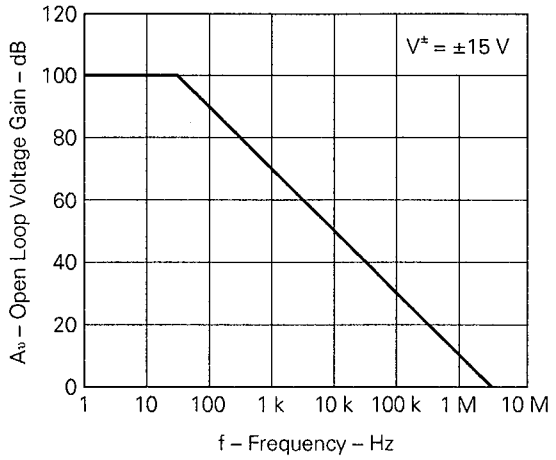

LARGE SIGNAL FREQUENCY RESPONSE

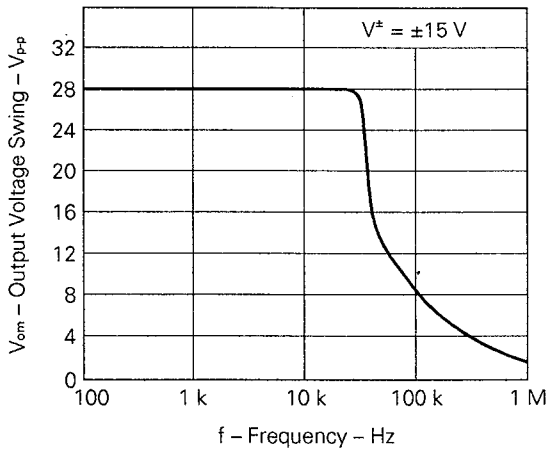

OUTPUT VOLTAGE SWING

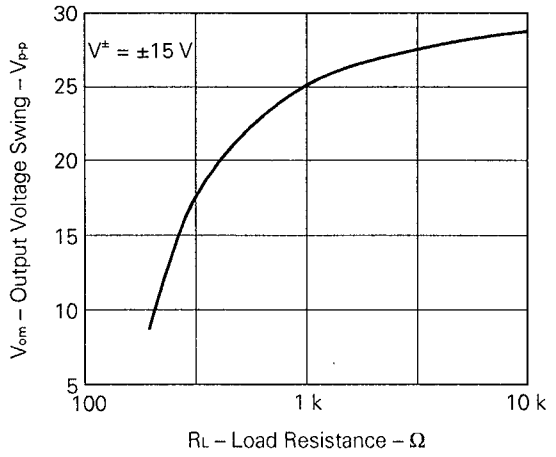

INPUT BIAS CURRENT

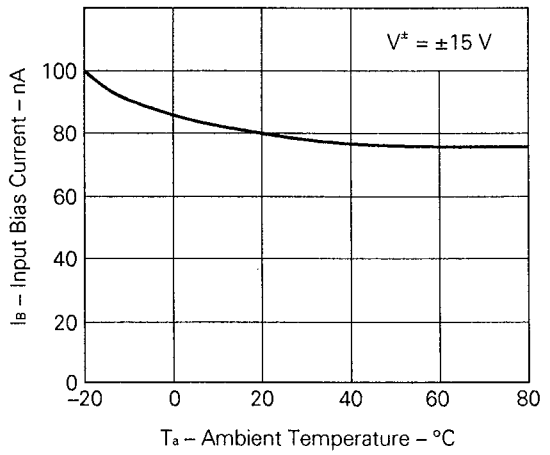

SUPPLY CURRENT

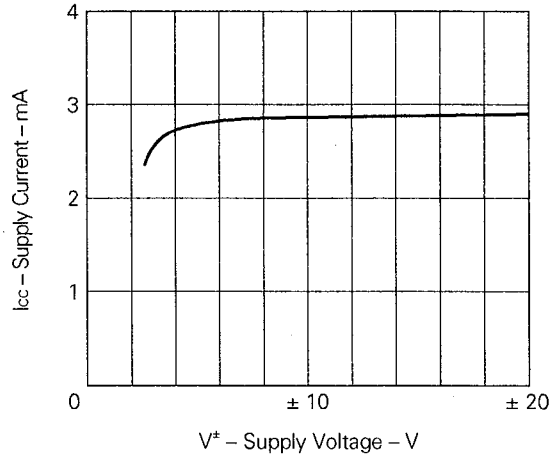

COMMON MODE INPUT VOLTAGE RANGE

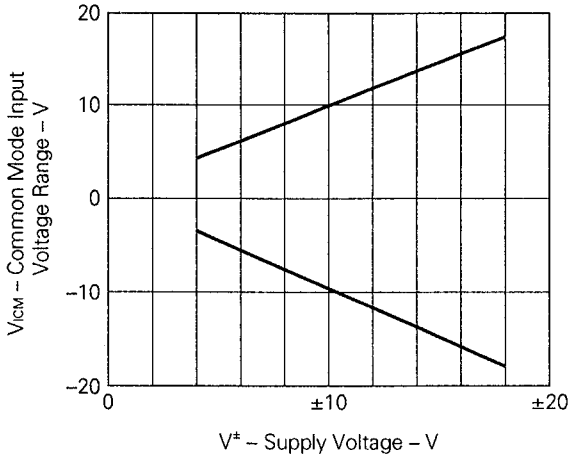

VOLTAGE FOLLOWER PULSE RESPONSE

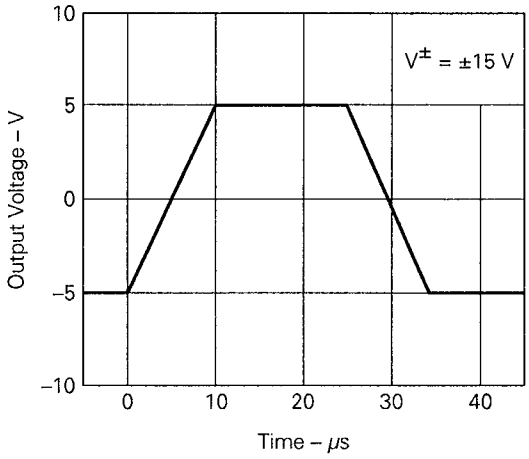

INPUT EQUIVALENT NOISE VOLTAGE DENSITY

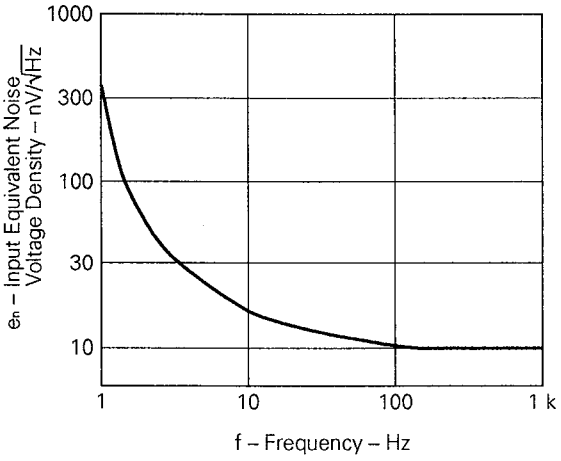

APPLICATION CIRCUIT

RIAA PREAMP (Av = 32.5 dB)

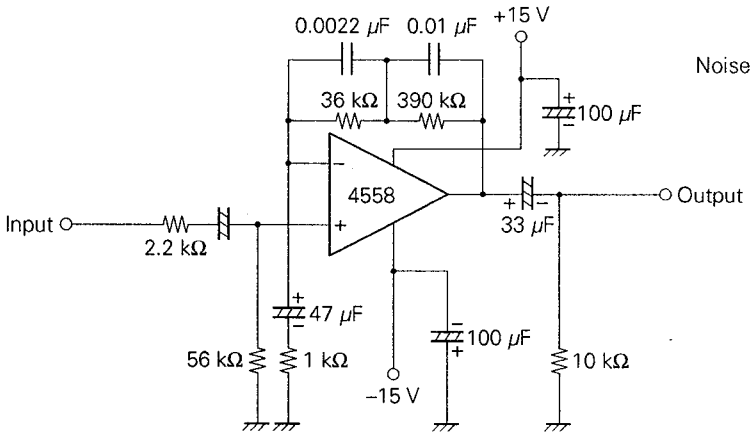

TYPICAL CHARACTERISTIC

Distortion 0.03 % (Vo = 1 Vr.m.s., f = 1 kHz)

Noise 1.0 μVr.m.s. (Input Equiv., Input Short / Peak Det., Average Indication)

TOTAL HARMONIC DISTORTION

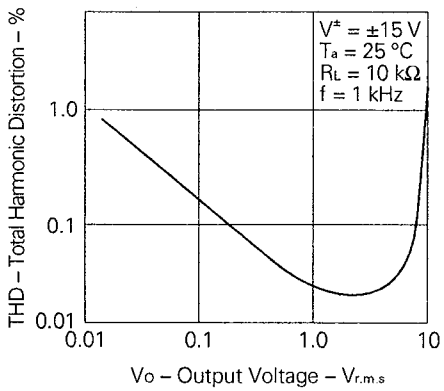

PEAK LEVEL METER

This circuit converts the peak voltage (about ±10 mV to ±10 V) of the input signal to a DC voltage (about 0.2 V to 1.3 V) and drives the meter.

Since the output voltage is proportional to the logarithmic value of the peak voltage of the input signal, indication of a much wider dynamic range can be obtained compared to conventional linear indicating methods.

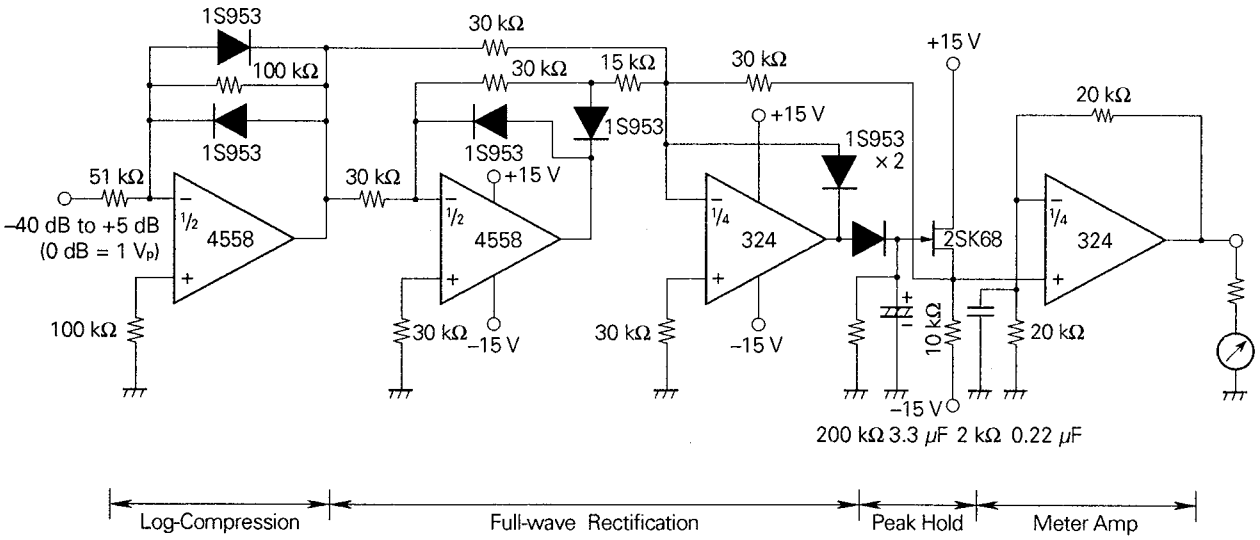

8PIN PLASTIC DIP (300 mil)

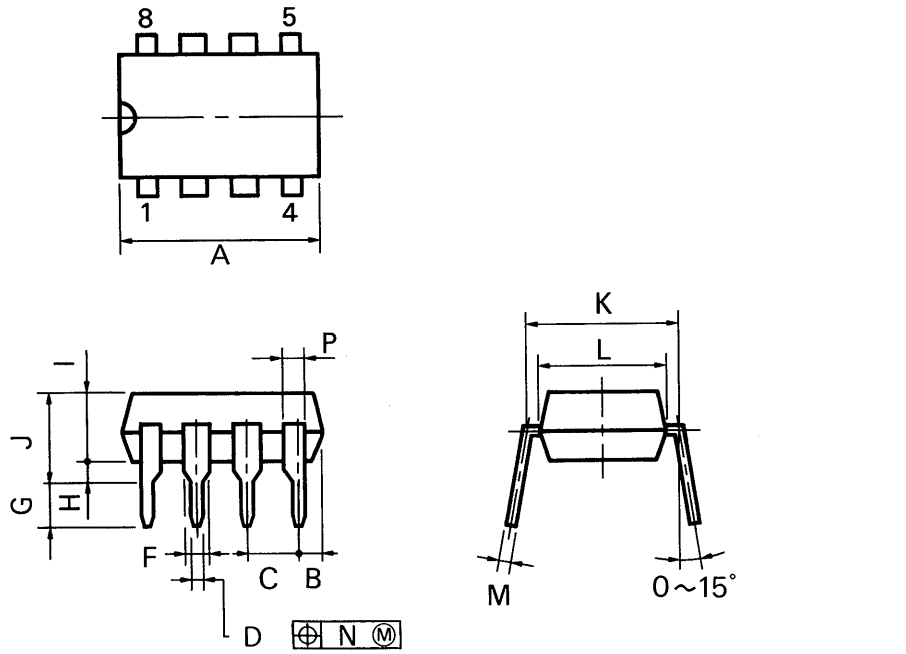

P8C-100-300B,C

NOTES

1) Each lead centerline is located within 0.25 mm (0.01 inch) of its true position (T.P.) at maximum material condition.

2) Item "K" to center of leads when formed parallel.

ITEM	MILLIMETERS	INCHES
A	10.16 MAX.	0.400 MAX.
B	1.27 MAX.	0.050 MAX.
C	2.54 (T.P.)	0.100 (T.P.)
D	$0.50^{\pm 0.10}$	$0.020^{+0.004}_{-0.005}$
F	1.4 MIN.	0.055 MIN.
G	$3.2^{\pm 0.3}$	$0.126^{\pm 0.012}$
H	0.51 MIN.	0.020 MIN.
I	4.31 MAX.	0.170 MAX.
J	5.08 MAX.	0.200 MAX.
K	7.62 (T.P.)	0.300 (T.P.)
L	6.4	0.252
M	$0.25^{+0.10}_{-0.05}$	$0.010^{+0.004}_{-0.003}$
N	0.25	0.01
P	0.9 MIN.	0.035 MIN.

8 PIN PLASTIC SOP (225 mil)

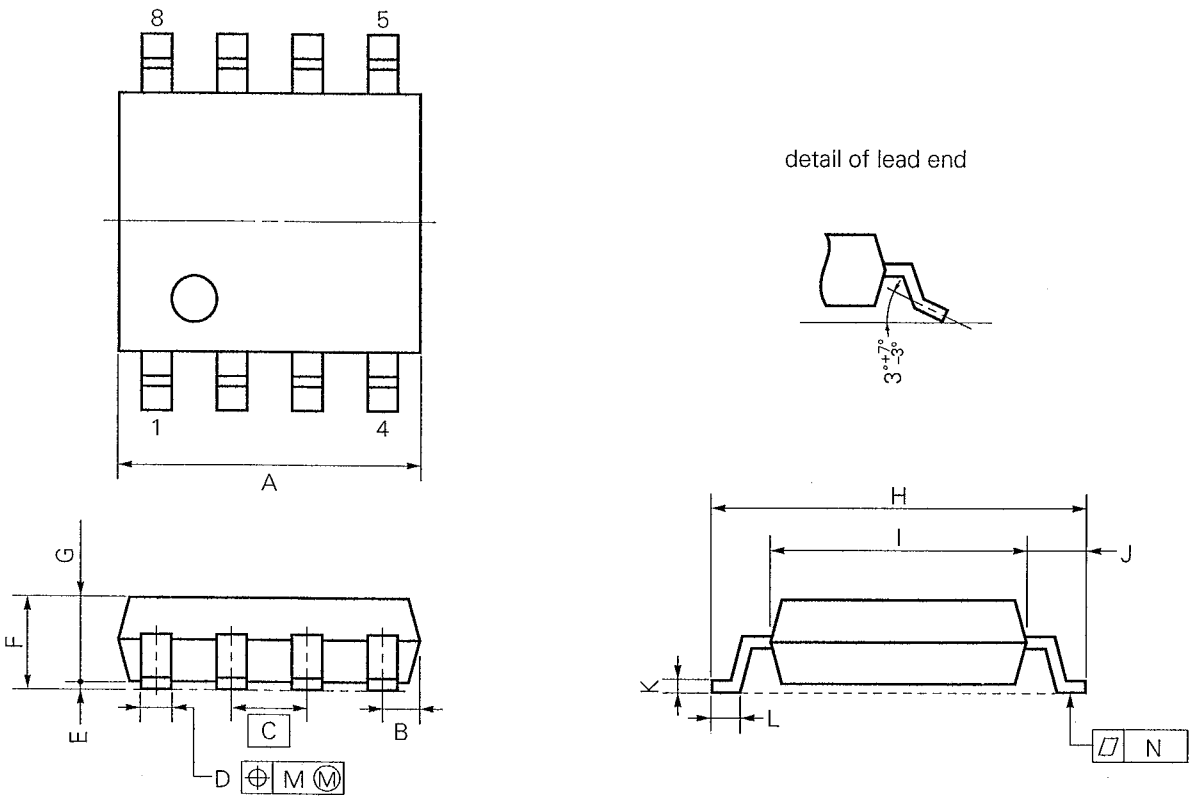

S8GM-50-225B-2

ITEM	MILLIMETERS	INCHES
A	5.37 MAX.	0.212 MAX.
B	0.78 MAX.	0.031 MAX.
C	1.27 (T.P.)	0.050 (T.P.)
D	$0.40^{+0.10}_{-0.05}$	$0.016^{+0.004}_{-0.003}$
E	0.1±0.1	0.004±0.004
F	1.8 MAX.	0.071MAX.
G	1.49	0.059
H	6.5±0.3	0.256±0.012
I	4.4	0.173
J	1.1	0.043
K	$0.15^{+0.10}_{-0.05}$	$0.006^{+0.004}_{-0.002}$
L	0.6±0.2	$0.024^{+0.008}_{-0.009}$
M	0.12	0.005
N	0.15	0.006

NOTE

Each lead centerline is located within 0.12 mm (0.005 inch) of its true position (T.P.) at maximum material condition.

RECOMMENDED SOLDERING CONDITIONS

The following conditions (see table below) must be met when soldering this product.
Please consult with our sales offices in case other soldering process is used, or in case soldering is done under different conditions.

TYPES OF SURFACE MOUNT DEVICE

For more details, refer to our document "SEMICONDUCTOR DEVICE MOUNTING TECHNOLOGY MANUAL" (IEI-1207).

[μPC4558G2]

Soldering method	Soldering conditions	Recommended condition symbol
Infrared ray reflow	Peak package's surface temperature: 230 °C or below, Reflow time: 30 seconds or below (210 °C or higher), Number of reflow process: 1, Exposure limit*: None	IR30-00-1
VPS	Peak package's surface temperature: 215 °C or below, Reflow time: 40 seconds or below (200 °C or higher), Number of reflow process: 1, Exposure limit*: None	VP15-00-1
Wave soldering	Solder temperature: 260 °C or below, Flow time: 10 seconds or below Number of flow process: 1, Exposure limit*: None	WS15-00-1
Partial heating method	Terminal temperature: 300 °C or below, Flow time: 10 seconds or below, Exposure limit*: None	

*: Exposure limit before soldering after dry-pack package is opened.
Storage conditions: 25 °C and relative humidity at 65 % or less.

Note: Do not apply more than a single process at once, except for "Partial heating method".

TYPES OF THROUGH HOLE DEVICE

[μPC4558C]

Soldering method	Soldering conditions	Recommended condition symbol
Wave soldering	Solder temperature: 260 °C or below, Flow time: 10 seconds or below	

[MEMO]

No part of this document may be copied or reproduced in any from or by any means without the prior written consent of NEC Corporation.NEC Corporation assumes no responsibility for any errors which may appear in this document.
NEC Corporation does not assume any liability for infringement of patents, copyrights or other intellectual property rights of third parties by or arising from use of a device described herein or any other liability arising from use of such device. No license, either express, implied or otherwise, is granted under any patents, copyrights or other intellectual property rights of NEC Corporation or others.
The devices listed in this document are not suitable for use in aerospace equipment, submarine cables, nuclear reactor control systems and life support systems. If customers intend to use NEC devices for above applications or they intend to use "Standard" quality grade NEC devices for applications not intended by NEC, please contact our sales people in advance.
Application examples recommended by NEC Corporation.

Standard: Computer, Office equipment, Communication equipment, Test and Measurement equipment, Machine tools, Industrial robots, Audio and Visual equipment, Other consumer products, etc.

Special: Automotive and Transportation equipment, Traffic control systems, Antidisaster systems, Anticrime systems, etc.

M4 92.6

勝 特 力 材 料 886-3-5773766
胜特力电子(上海) 86-21-34970699
胜特力电子(深圳) 86-755-83298787
Http://www.100y.com.tw