THC63LVDM83D

REDUCED SWING LVDS 24Bit COLOR HOST-LCD PANEL INTERFACE

General Description

The THC63LVDM83D transmitter is designed to support pixel data transmission between Host and Flat Panel Display from NTSC up to 1080p(60Hz).
The THC63LVDM83D converts 28bits of CMOS/TTL data into LVDS(Low Voltage Differential Signaling) data stream. The transmitter can be programmed for rising edge or falling edge clocks through a dedicated pin. At a transmit clock frequency of 160MHz, 24bits of RGB data and 4bits of timing and control data (HSYNC, VSYNC, CNTL1, CNTL2) are transmitted at an effective rate of 1120Mbps per LVDS channel.

Features

- Wide dot clock range: 8-160MHz suited for NTSC, VGA, SVGA, XGA,SXGA and SXGA+
- PLL requires no external components
- Supports spread spectrum clock generator
- On chip jitter filtering
- Clock edge selectable
- Supports reduced swing LVDS for low EMI
- Power down mode
- Low power single 3.3V CMOS design
- Low profile 56 Lead TSSOP Package
- 1.2 up to 3.3V tolerant data inputs to connect directly to low power,low voltage application and graphic processor.
- Pin compatible with THC63LVDM83C/83R(24bits)

Block Diagram

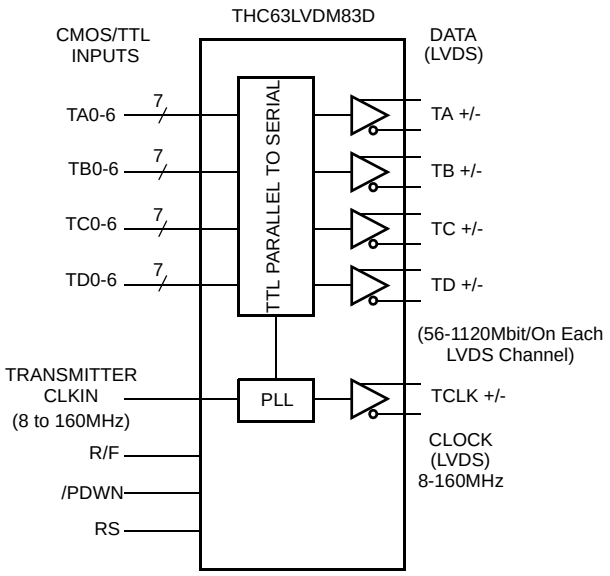

Pin Out

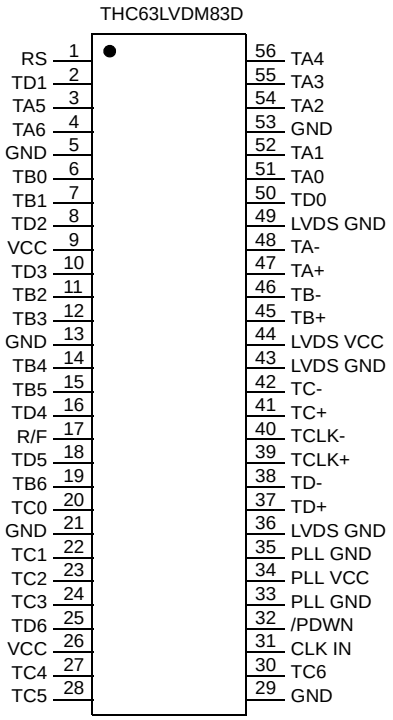

Pin Description

Pin Name	Pin #	Type	Description
TA+, TA-	47, 48	LVDS OUT	LVDS Data Out.
TB+, TB-	45, 46	LVDS OUT	
TC+, TC-	41, 42	LVDS OUT	
TD+, TD-	37, 38	LVDS OUT	
TCLK+, TCLK-	39, 40	LVDS OUT	LVDS Clock Out.
TA0 ~ TA6	51, 52, 54, 55, 56, 3, 4	IN	Pixel Data Inputs.
TB0 ~ TB6	6, 7, 11, 12, 14, 15, 19	IN	
TC0 ~ TC6	20, 22, 23, 24, 27, 28, 30	IN	
TD0 ~ TD6	50, 2, 8, 10, 16, 18, 25	IN	
/PDWN	32	IN	H: Normal operation, L: Power down (all outputs are Hi-Z)
RS	1	IN	LVDS swing mode, VREF select.See Fig4, 5. RS: VCC — LVDS Swing: 350mV — Small Swing Input Support: N/A RS: 0.6 ~ 1.4V — LVDS Swing: 350mV — Small Swing Input Support: RS=VREF[a] RS: GND — LVDS Swing: 200mV — Small Swing Input Support: N/A a. VREF is Input Reference Voltage.
R/F	17	IN	Input Clock Triggering Edge Select. H: Rising edge, L: Falling edge
VCC	9, 26	Power	Power Supply Pins for TTL inputs and digital circuitry.
CLKIN	31	IN	Clock in.
GND	5, 13, 21, 29, 53	Ground	Ground Pins for TTL inputs and digital circuitry.
LVDS VCC	44	Power	Power Supply Pins for LVDS Outputs.
LVDS GND	36, 43, 49	Ground	Ground Pins for LVDS Outputs.
PLL VCC	34	Power	Power Supply Pin for PLL circuitry.
PLL GND	33, 35	Ground	Ground Pins for PLL circuitry.

Absolute Maximum Ratings[1]

Supply Voltage (V_{CC})	-0.3V ~ +4.0V
CMOS/TTL Input Voltage	-0.3V ~ (V_{CC} + 0.3V)
CMOS/TTL Output Voltage	-0.3V ~ (V_{CC} + 0.3V)
LVDS Transmitter Output Voltage	-0.3V ~ (V_{CC} + 0.3V)
Output Current	continuous
Junction Temperature	+125°C
Storage Temperature Range	-55°C ~ +150°C
Reflow Peak Temperature / Time	+260°C / 10sec.
Maximum Power Dissipation @+25°C	1.8W

1. "Absolute Maximum Ratings" are those valued beyond which the safety of the device can not be guaranteed. They are not meant to imply that the device should be operated at these limits. The tables of "Electrical Characteristics" specify conditions for device operation.

Electrical Characteristics CMOS/TTL DC Specifications

V_{CC} = 3.0V ~ 3.6V, Ta = 0°C ~ +70°C

Symbol	Parameter	Conditions	Min.	Typ.	Max.	Units
V_{IH}	High Level Input Voltage	RS=VCC or GND	2.0		V_{CC}	V
V_{IL}	Low Level Input Voltage	RS=VCC or GND	GND		0.8	V
V_{DDQ}[1]	Small Swing Voltage		1.2		2.8	V
V_{REF}	Input Reference Voltage	Small Swing (RS=V_{DDQ}/2)		V_{DDQ}/2		
V_{SH}[2]	Small Swing High Level Input Voltage	V_{REF} = V_{DDQ}/2	V_{DDQ}/2 +100mV			V
V_{SL}[2]	Small Swing Low Level Input Voltage	V_{REF} = V_{DDQ}/2			V_{DDQ}/2 -100mV	V
I_{INC}	Input Current	$0V \le V_{IN} \le V_{CC}$			±10	μA

Notes: [1] V_{DDQ} voltage defines max voltage of small swing input. It is not an actual input voltage.
[2] Small swing signal is applied to TA0-6,TB0-6,TC0-6,TD0-6 and CLKIN.

LVDS Transmitter DC Specifications

V_{CC} = 3.0V ~ 3.6V, Ta = 0°C ~ +70°C

Symbol	Parameter	Conditions		Min.	Typ.	Max.	Units
VOD	Differential Output Voltage	RL=100Ω	Normal swing RS=V_{CC}	250	350	450	mV
			Reduced swing RS=GND	100	200	300	mV
ΔVOD	Change in VOD between complementary output states	RL=100Ω				35	mV
VOC	Common Mode Voltage			1.125	1.25	1.375	V
ΔVOC	Change in VOC between complementary output states					35	mV
I_{OS}	Output Short Circuit Current	VOUT=0V, RL=100Ω				-24	mA
I_{OZ}	Output TRI-STATE Current	/PDWN=0V, V_{OUT}=0V to V_{CC}				±10	μA

Supply Current

V_{CC} = 3.0V ~ 3.6V, Ta = 0°C ~ +70°C

Symbol	Parameter	Condition(*)		Typ.	Max.	Units
I_{TCCW}	Transmitter Supply Current	RL=100Ω,CL=5pF	f=85MHz	61	67	mA
		V_{CC}=3.3V, RS=V_{CC}	f=135MHz	77	83	mA
		Worst Case Pattern	f=160MHz	84	92	mA
		RL=100Ω,CL=5pF	f=85MHz	50	56	mA
		V_{CC}=3.3V, RS=GND	f=135MHz	65	71	mA
		Worst Case Pattern	f=160MHz	73	80	mA
I_{TCCS}	Transmitter Power Down Supply Current	/PDWN = L, All Inputs = L or H			10	μA

Worst Case Pattern

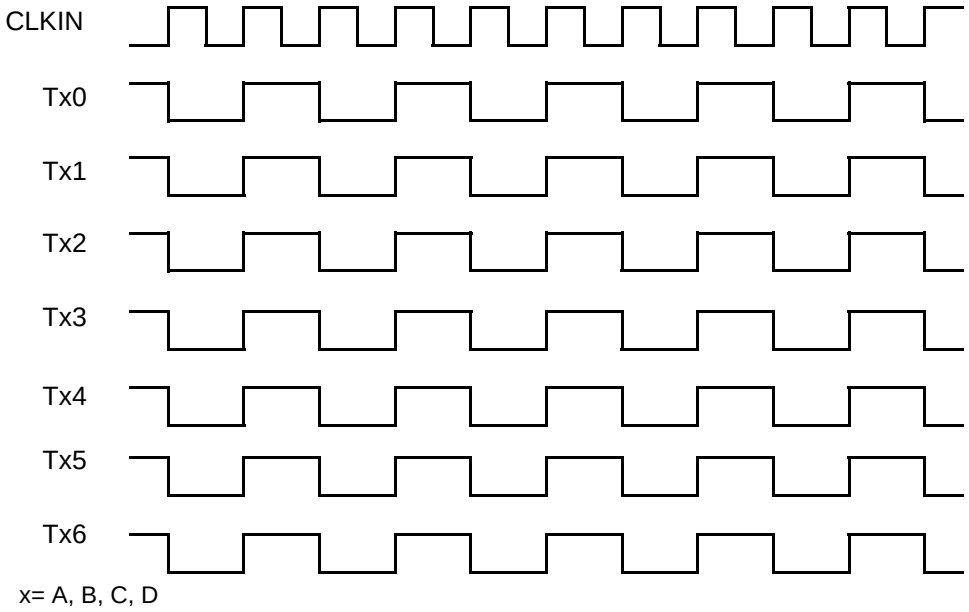

Fig1. Worst Case Pattern

Switching Characteristics

V_{CC} = 3.0V ~ 3.6V, Ta = 0°C ~ +70°C

Symbol	Parameter	Min.	Typ.	Max.	Units
t_{TCIT}	CLK IN Transition time			5.0	ns
t_{TCP}	CLK IN Period	6.25	T	125	ns
t_{TCH}	CLK IN High Time	0.35T	0.5T	0.65T	ns
t_{TCL}	CLK IN Low Time	0.35T	0.5T	0.65T	ns
t_{TCD}	CLK IN to TCLK+/- Delay		3T		ns
t_{TS}	TTL Data Setup to CLK IN	2.0			ns
t_{TH}	TTL Data Hold from CLK IN	0.0			ns
t_{LVT}	LVDS Transition Time		0.6	1.5	ns
t_{TOP1}	Output Data Position0 (T=6.25ns~20ns)	-0.15	0.0	+0.15	ns
t_{TOP0}	Output Data Position1 (T=6.25ns~20ns)	$\frac{T}{7}-0.15$	$\frac{T}{7}$	$\frac{T}{7}+0.15$	ns
t_{TOP6}	Output Data Position2 (T=6.25ns~20ns)	$2\frac{T}{7}-0.15$	$2\frac{T}{7}$	$2\frac{T}{7}+0.15$	ns
t_{TOP5}	Output Data Position3(T=6.25ns~20ns)	$3\frac{T}{7}-0.15$	$3\frac{T}{7}$	$3\frac{T}{7}+0.15$	ns
t_{TOP4}	Output Data Position4 (T=6.25ns~20ns)	$4\frac{T}{7}-0.15$	$4\frac{T}{7}$	$4\frac{T}{7}+0.15$	ns
t_{TOP3}	Output Data Position5 (T=6.25ns~20ns)	$5\frac{T}{7}-0.15$	$5\frac{T}{7}$	$5\frac{T}{7}+0.15$	ns
t_{TOP2}	Output Data Position6 (T=6.25ns~20ns)	$6\frac{T}{7}-0.15$	$6\frac{T}{7}$	$6\frac{T}{7}+0.15$	ns
t_{TPLL}	Phase Lock Loop Set			10.0	ms

AC Timing Diagrams

TTL Input

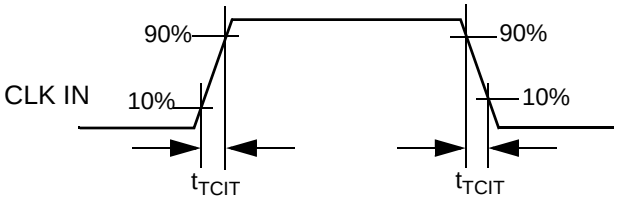

Fig2. CLKIN Transition Time

LVDS Output

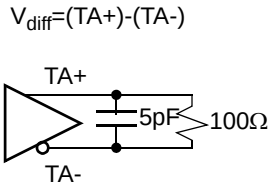

LVDS Output Load

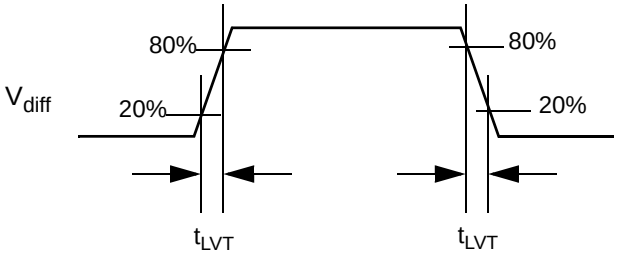

Fig3. LVDS Output Load and Transition Time

AC Timing Diagrams

TTL Inputs

RS pin	VOD
VCC	350mV
0.6~1.4V	
GND	200mV

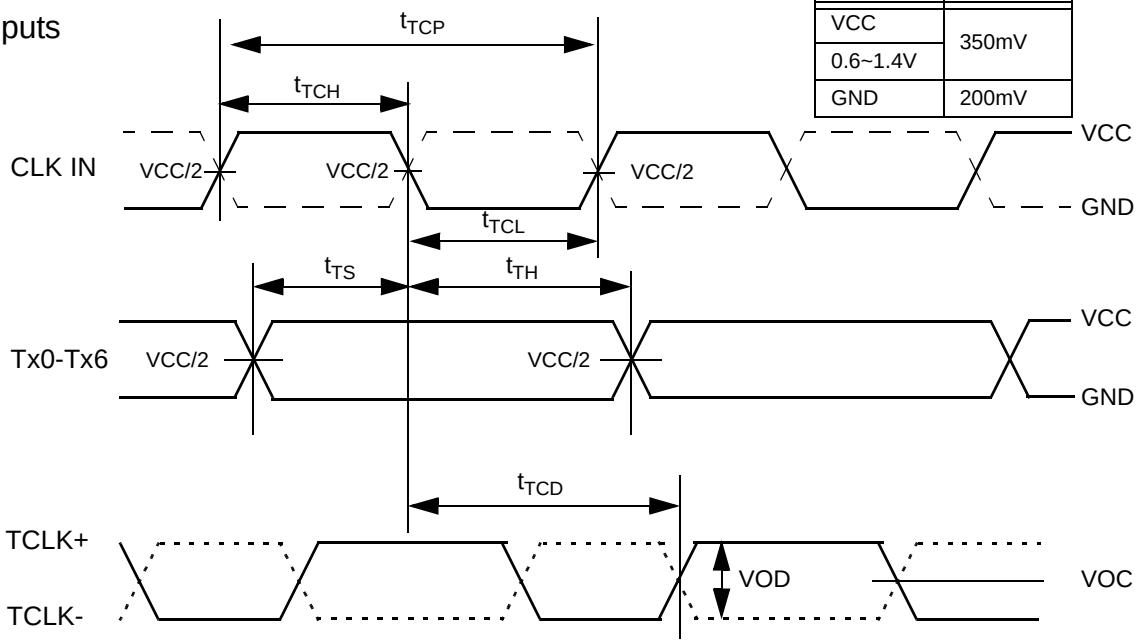

Note:
CLK IN: for R/F=GND, denote as solid line,
for R/F=VCC, denote as dashed line.

Fig4. CLKIN Period, High/Low Time, Setup/Hold Timing

Small Swing Inputs

RS pin	VREF
VCC	VCC/2
0.6~1.4V	Input Voltage of RS pin
GND	VCC/2

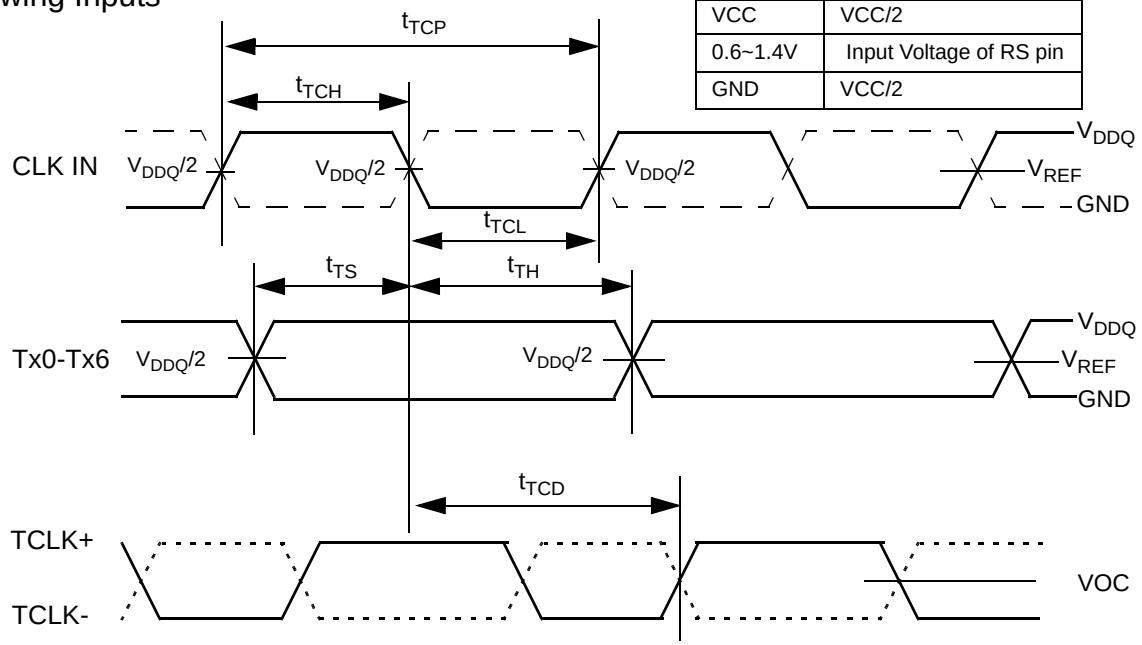

Note:
CLK IN: for R/F=GND, denote as solid line,
for R/F=VCC, denote as dashed line.

Fig5. Small Swing Inputs

AC Timing Diagrams

LVDS Output

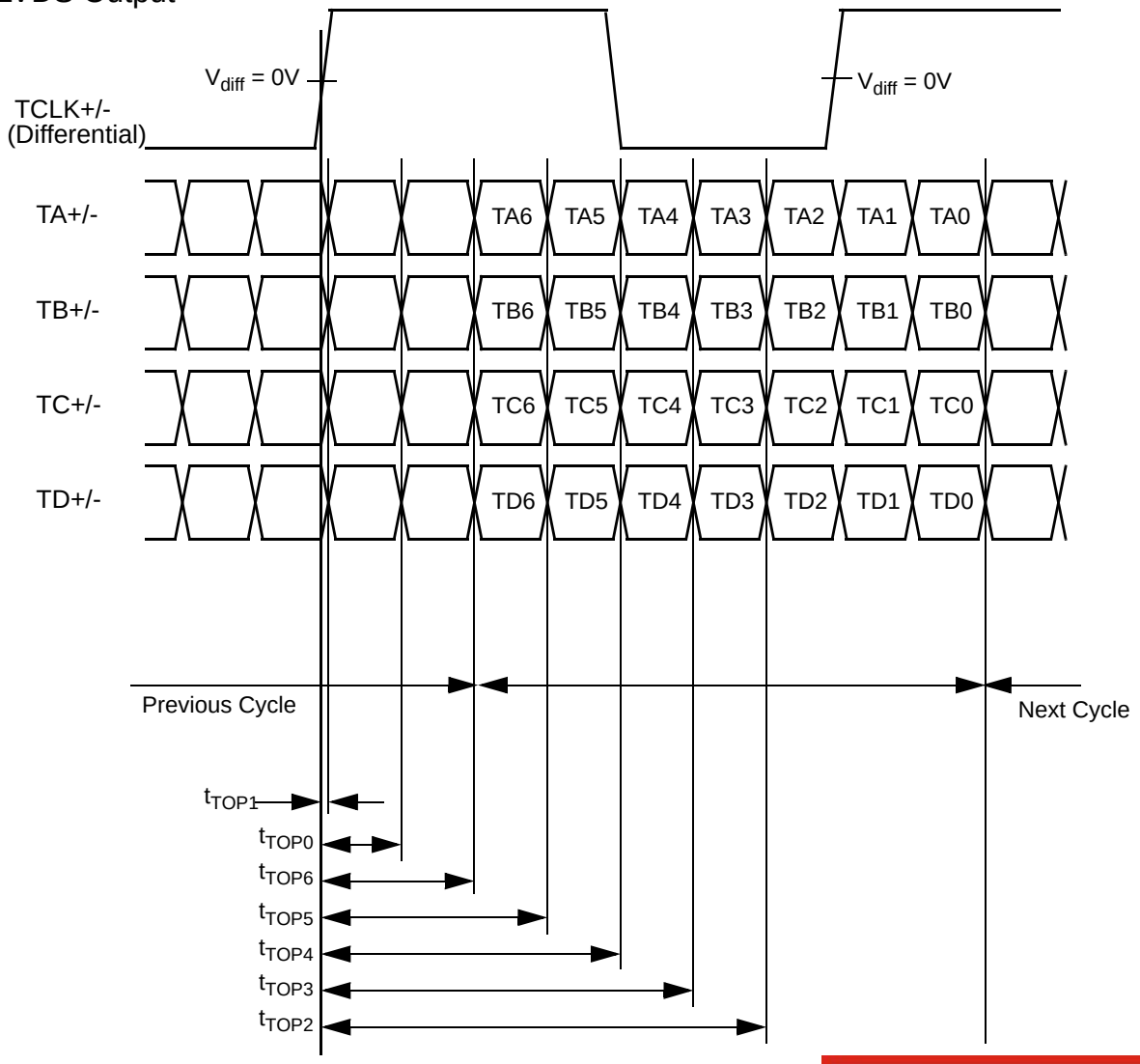

Fig6. LVDS Output Data Position

Phase Lock Loop Set Time

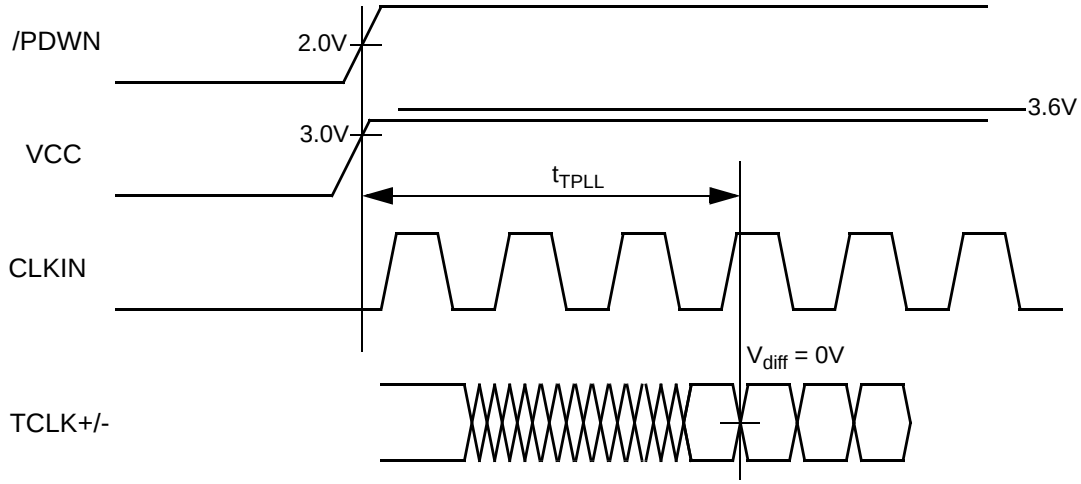

Fig7. PLL Lock Set Time

Note

1)Cable Connection and Disconnection

Don't connect and disconnect the LVDS cable, when the power is supplied to the system.

2)GND Connection

Connect the each GND of the PCB which THC63LVDM83D and LVDS-Rx on it. It is better for EMI reduction to place GND cable as close to LVDS cable as possible.

3)Multi Drop Connection

Multi drop connection is not recommended.

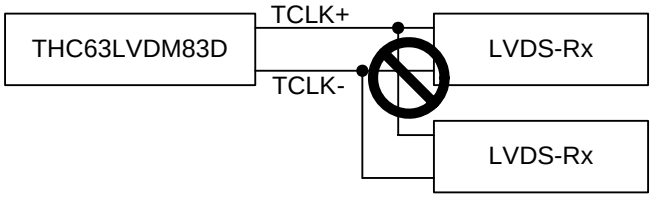

4)Asynchronous use

Asynchronous use such as following systems are not recommended.

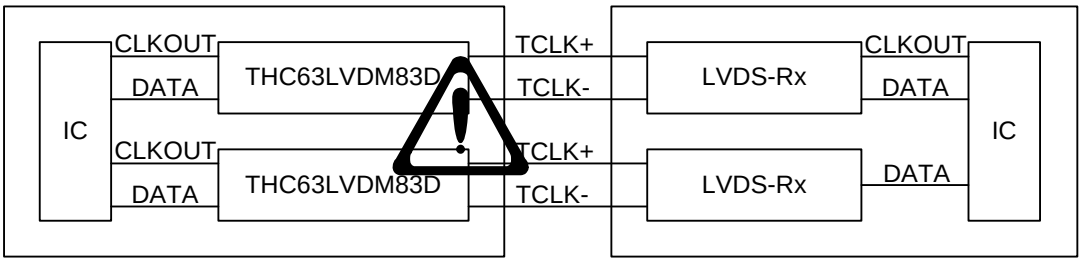

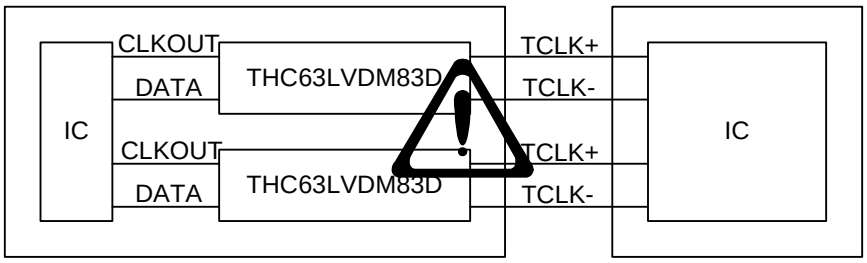

Package

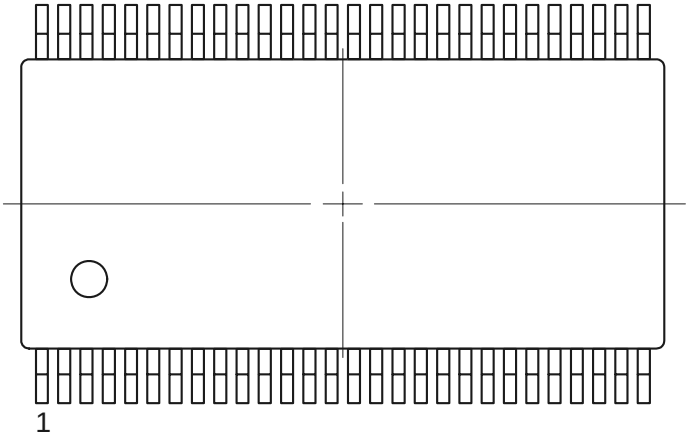

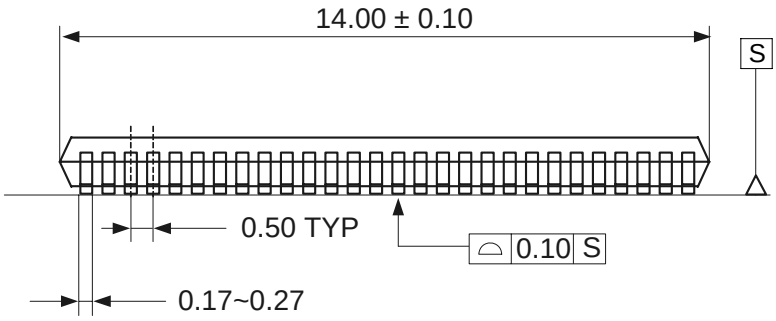

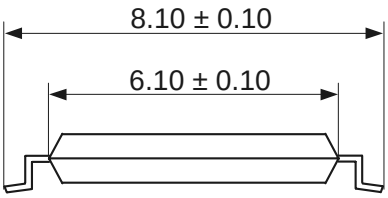

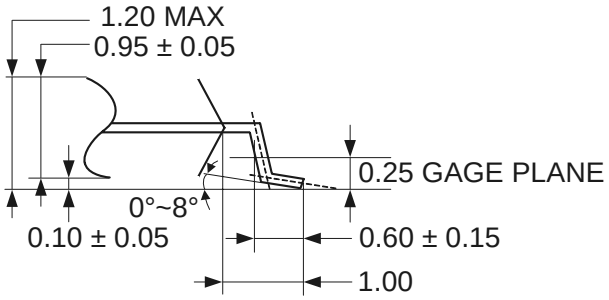

Detail of Lead End

Unit:mm

Notices and Requests

1. The product specifications described in this material are subject to change without prior notice.
2. The circuit diagrams described in this material are examples of the application which may not always apply to the customer's design. We are not responsible for possible errors and omissions in this material. Please note if errors or omissions should be found in this material, we may not be able to correct them immediately.
3. This material contains our copy right, know-how or other proprietary. Copying or disclosing to third parties the contents of this material without our prior permission is prohibited.
4. Note that if infringement of any third party's industrial ownership should occur by using this product, we will be exempted from the responsibility unless it directly relates to the production process or functions of the product.
5. This product is presumed to be used for general electric equipment, not for the applications which require very high reliability (including medical equipment directly concerning people's life, aerospace equipment, or nuclear control equipment). Also, when using this product for the equipment concerned with the control and safety of the transportation means, the traffic signal equipment, or various Types of safety equipment, please do it after applying appropriate measures to the product.
6. Despite our utmost efforts to improve the quality and reliability of the product, faults will occur with a certain small probability, which is inevitable to a semi-conductor product. Therefore, you are encouraged to have sufficiently redundant or error preventive design applied to the use of the product so as not to have our product cause any social or public damage.
7. Please note that this product is not designed to be radiation-proof.
8. Customers are asked, if required, to judge by themselves if this product falls under the category of strategic goods under the Foreign Exchange and Foreign Trade Control Law.

THine Electronics, Inc.
E-mail: sales@thine.co.jp