SIMPLE LED DRIVER FOR MR16 AND AR111 APPLICATIONS

Check for Samples: TPS92560

FEATURES

- **Controlled peak input current to prevent over-stressing of the electronic transformer**
- **Allows either step-up or step-up/down operation**
- **Compatible to generic electronic transformers**
- **Compatible to magnetic transformers and DC power supplies**
- **Integrated active low-side input rectifiers**
- **Compact and simple circuit**
- **>85% efficiency (12VDC input)**
- **Power factor > 0.9 (full load with AC input)**
- **Hysteretic control scheme**
- **Output Over-Voltage Protection**
- **Over-temperature Shutdown**
- **10-pin mini SOIC package with exposed pad**

APPLICATIONS

- **MR16/AR111 LED lamps**
- **Lighting system using electronic transformer**
- **General lighting systems that require a boost / SEPIC LED driver**

DESCRIPTION

The TPS92560 is a simple LED driver designed to drive high power LEDs by drawing constant current from the power source. The device is ideal for MR16 and AR111 applications which need good compatibility to DC and AC voltages and electronic transformers. The hysteretic control scheme does not need control loop compensation while providing the benefits of fast transient response and high power factor. The patent pending feedback control method allows the output power to be determined by the number of LED used without component change. The TPS92560 supports both boost and SEPIC configurations for the use of different LED modules.

TYPICAL APPLICATION

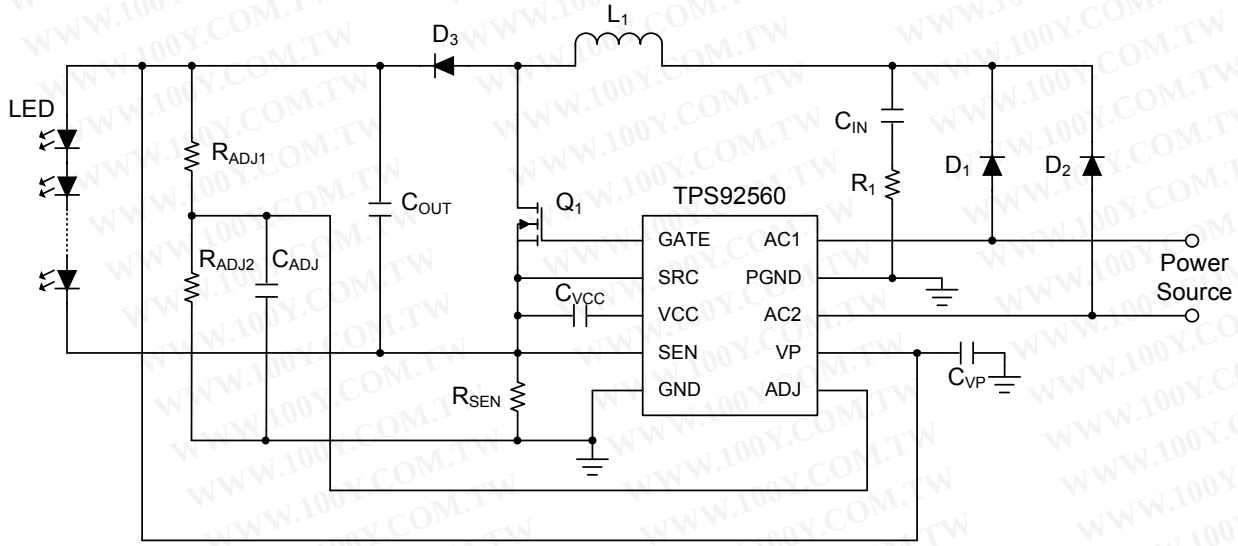

Typical application circuit of the TPS92560 using boost configuration

TYPICAL APPLICATION (Continue)

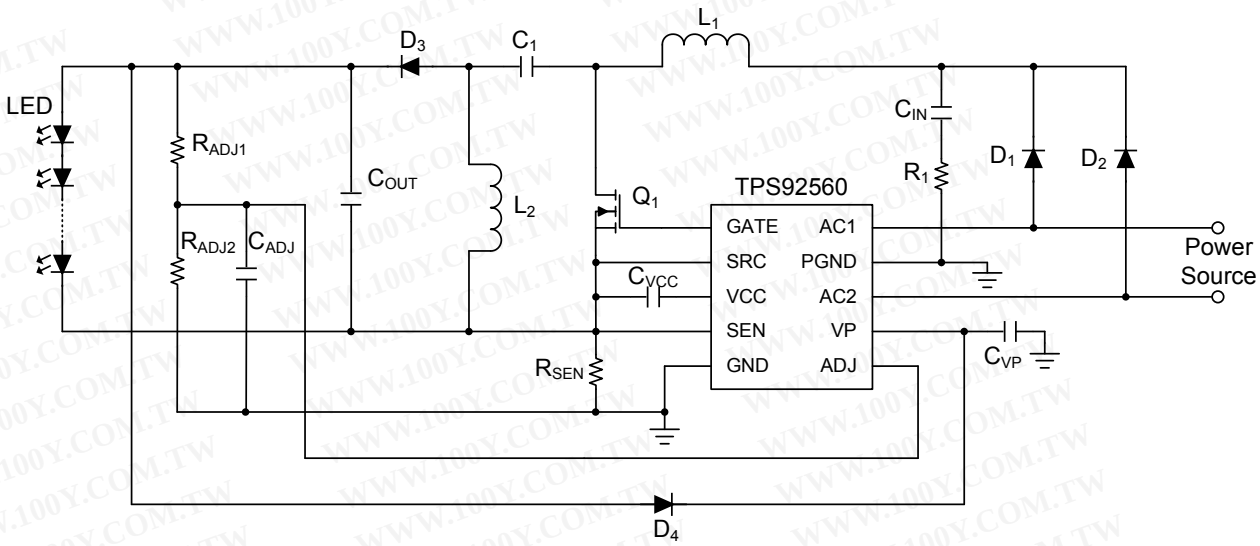

Typical Application Circuit of the TPS92560 using SEPIC configuration

These devices have limited built-in ESD protection. The leads should be shorted together or the device placed in conductive foam during storage or handling to prevent electrostatic damage to the MOS gates.

BLOCK DIAGRAM

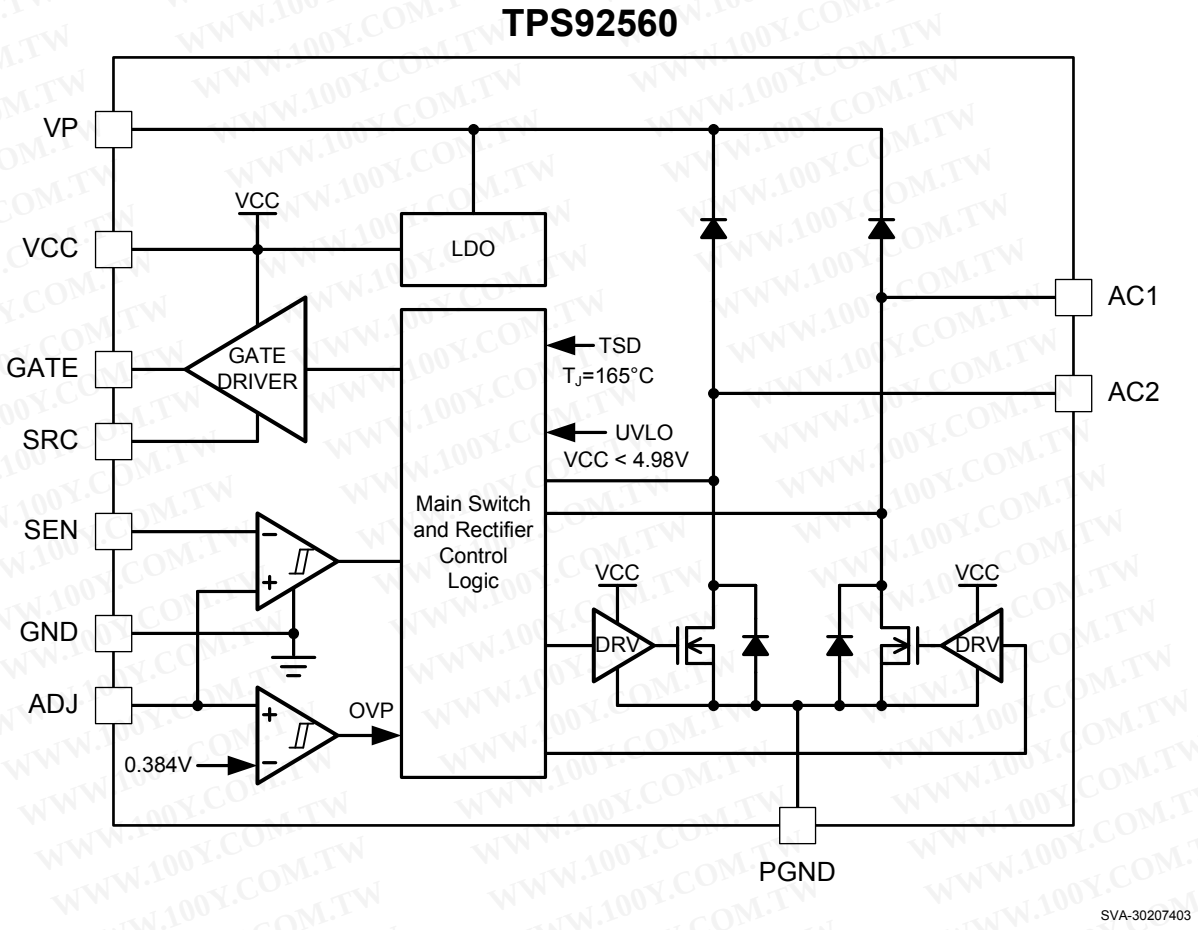

ORDERING INFORMATION

ORDER NUMBER	PACKAGE TYPE	NSC PACKAGE DRAWING	SUPPLIED AS
TPS92560DGQ	10L MINI SOIC EXP PAD	MUC10A	1000 Units on Tape and Reel
TPS92560DGQR			4500 Units on Tape and Reel

10-pin mini SOIC Package
(TOP VIEW)

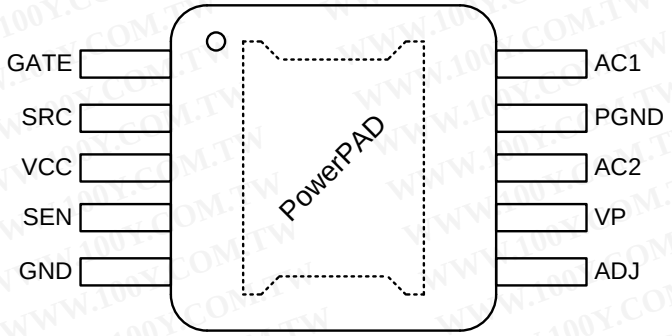

Package Number MUC10A

SVA-30207405

TERMINAL FUNCTIONS

PIN		DESCRIPTION	APPLICATION INFORMATION
NO.	NAME		
1	GATE	Gate driver output pin	Connect to the Gate terminal of the low-side N-channel Power FET
2	SRC	Gate driver return	Connect to the Source terminal of the low-side N-channel Power FET
3	VCC	VCC regulator output	Connect 0.47µF decoupling cap from this pin to SRC pin
4	SEN	Current sense pin	Kelvin-sense current sensing input. Should connect to the current sensing resistor, R_{SEN}.
5	GND	Analog ground	Reference point for current sensing.
6	ADJ	LED current adjust pin	Connect to resistor divider from LED top voltage rail to set LED current
7	VP	Power supply of the IC	Connect it to the LED top voltage rail (for boost) or Connect it through a diode from LED top voltage rail (for SEPIC)
8	AC2	Power return terminal	Connect to AC or DC input terminal
9	PGND	Power ground	Connect to system ground plane
10	AC1	Power return terminal	Connect to AC or DC input terminal
	PowerPAD	Thermal DAP	Connect to system ground plane for heat dissipation

ABSOLUTE MAXIMUM RATINGS(1)

If Military/Aerospace specified devices are required, please contact the Texas Instruments Sales Office/ Distributors for availability and specifications.

		VALUE	UNIT
	SRC, SEN, ADJ	–0.3 to 5	V
	AC1, AC2	–1 to 45	V
	VP	–0.3 to 45	V
	VCC	–0.3 to 12	V
ESD Rating	Human Body Model(2)	1.5	kV
	Storage Temperature	–65 to +150	°C
T_J	Junction Temperature	–40 to +125	°C

(1) Absolute Maximum Ratings are limits which damage to the device may occur. Operating ratings are conditions under which operation of the device is intended to be functional. For specified specifications and test conditions, see the electrical characteristics.
(2) The human body model is a 100 pF capacitor discharged through a 1.5 kΩ resistor into each pin.

RECOMMENDED OPERATING CONDITIONS

over operating free-air temperature range (unless otherwise noted)

		MIN	NOM	MAX	UNIT
VP	Supply voltage range	6.5		42	V
T_J	Junction temperature range	–40		125	°C
θ_{JA} (1)	Thermal resistance, Junction to Ambient, 0 LFPM Air Flow		48		°C/W
θ_{JC} (1)	Thermal resistance, Junction to Case		10		°C/W

(1) θ_{JA} and θ_{JC} measurements are performed on JEDEC boards in accordance with JESD 51-5 and JESD 51-7

ELECTRICAL CHARACTERISTICS

Specification with standard type are for T_A=T_J= 25°C only; limits in **boldface** type apply over the full Operating Junction Temperature (T_J) range. Minimum and Maximum are specified through test, design or statistical correlation. Typical values represent the most likely parametric norm at T_J= 25°C, and are provided for reference purposes only. Unless otherwise stated the following conditions apply: V_{VP} = 12V

PARAMETER		TEST CONDITIONS	MIN	TYP	MAX	UNIT
SUPPLY						
I_{IN}	V_{IN} Operating current	6.5 V < V_{VP} < 42 V	**0.7**	1.4	**1.95**	mA
VCC REGULATOR						
V_{CC}	V_{CC} Regulated Voltage(1)	I_{CC} ≤ 10mA, C_{VCC} =0.47µF 12V < V_{VP} < 42V	**7.82**	8.45	**9.08**	V
		I_{CC} = 10mA, C_{VCC} =0.47µF V_{VP} = 6.5V	**5.22**	5.8	**6.18**	
		I_{CC} = 0mA, C_{VCC} =0.47µF V_{VP} = 2V	**1.96**	2.0		
I_{CC-LIM}	V_{CC} Current Limit	V_{CC} = 0V 6.5V < V_{VP} < 42V	**21**	30	**39**	mA
$V_{CC-UVLO-UPTH}$	V_{CC} UVLO Upper Threshold		**5.0**	5.38	**5.76**	V
$V_{CC-UVLO-LOTH}$	V_{CC} UVLO Lower Threshold		**4.63**	4.98	**5.33**	V
$V_{CC-UVLO-HYS}$	V_{CC} UVLO Hysteresis		**190**	400	**640**	mV
MOSFET GATE DRIVER						
$V_{GATE-HIGH}$	Gate Driver Output High	w.r.t. SRC Sinking 100mA from GATE Force VCC = 8.5V	**7.61**	8.1	**8.5**	V
$V_{GATE-LOW}$	Gate Driver Output Low	w.r.t. SRC Sourcing 100mA to GATE	**100**	180	**290**	mV
t_{RISE}	V_{GATE} Rise Time	C_{GATE} = 1nF across GATE and SRC		22		ns
t_{FALL}	V_{GATE} Fall Time	C_{GATE} = 1nF across GATE and SRC		14		ns
$t_{RISE-PG-DELAY}$	V_{GATE} Low to High Propagation Delay	C_{GATE} = 1nF across GATE and SRC		68		ns
$t_{FALL-PG-DELAY}$	V_{GATE} High to Low Propagation Delay	C_{GATE} = 1nF across GATE and SRC		84		ns
CURRENT SOURCE AT ADJ PIN						
$I_{ADJ-STARTUP}$	Output Current of ADJ pin at Startup	V_{ADJ} = 0V	**16**	20	**24**	µA
$I_{ADJ-ELEC-XFR}$	Output Current of ADJ pin for Electronic Transformers	An Electronic Transformer is Detected	**8**	11.5	**15**	µA
$I_{ADJ-MAG-XFR}$	Output Current of ADJ pin for Inductive Transformers	An Magnetic Transformer is Detected	**7**	9.5	**12**	µA
CURRENT SENSE COMPARATOR						
$V_{SEN-UPPER-TH}$	V_{SEN} Upper Threshold Over V_{ADJ}	V_{SEN}-V_{ADJ}, V_{ADJ}=0.2V, V_{GATE} at falling edge	**8.9**	14.9	**20.9**	mV
$V_{SEN-LOWER-TH}$	V_{SEN} Lower Threshold Over VADJ	V_{SEN}-V_{ADJ}, V_{ADJ}=0.2V V_{GATE} at rising edge	**–20.6**	–14.9	**–8.8**	mV
$V_{SEN-HYS}$	V_{SEN} Hysteresis	($V_{SEN-UPPER-TH}$ - $V_{SEN-LOWER-TH}$)	**22.5**	29.8	**37.5**	mV
$V_{SEN-OFFSET}$	V_{SEN} Offset w.r.t. V_{ADJ}	($V_{SEN-UPPER-TH}$ + $V_{SEN-LOWER-TH}$)/2	**–3.5**	0.02	**3.5**	mV
ACTIVE low-side input rectifiers						
R_{ACn-ON}	In resistance of AC1 and AC2 to GND	I_{ACn} = 200mA		300	**570**	mΩ

(1) V_{CC} provides self bias for the internal gate drive and control circuits. Device thermal limitations limit external loading.

ELECTRICAL CHARACTERISTICS (continued)

Specification with standard type are for T_A=T_J= 25°C only; limits in **boldface** type apply over the full Operating Junction Temperature (T_J) range. Minimum and Maximum are specified through test, design or statistical correlation. Typical values represent the most likely parametric norm at T_J= 25°C, and are provided for reference purposes only. Unless otherwise stated the following conditions apply: V_{VP} = 12V

PARAMETER		TEST CONDITIONS	MIN	TYP	MAX	UNIT
$V_{ACn\text{-}ON\text{-}TH}$	Turn ON Voltage Threshold of AC1 and AC2	V_{ACn} Decreasing	36	52	67	mV
$V_{ACn\text{-}OFF\text{-}TH}$	Turn OFF Voltage Threshold of AC1 and AC2	V_{ACn} Increasing	77	90	104	mV
$V_{ACn\text{-}TH\text{-}HYS}$	Hysteresis Voltage of AC1 and AC2	$V_{ACn\text{-}OFF\text{-}TH}$ - $V_{ACn\text{-}ON\text{-}TH}$		39		mV
$I_{ACn\text{-}OFF}$	Off Current of AC1 and AC2	V_{ACn} = 45V		21	**32**	µA
OUTPUT OVER-VOLTAGE-PROTECTION (OVP)						
$V_{ADJ\text{-}OVP\text{-}UPTH}$	Output Over-Voltage-Detection Upper Threshold	V_{ADJ} Increasing, V_{GATE} at falling edge	**0.353**	0.384	**0.415**	V
$V_{ADJ\text{-}OVP\text{-}LOTH}$	Output Over-Voltage-Detection Lower Threshold	V_{ADJ} Decreasing, V_{GATE} at rising edge	**0.312**	0.339	**0.366**	V
$V_{ADJ\text{-}OVP\text{-}HYS}$	Output Over-Voltage-Detection Hysteresis	$V_{ADJ\text{-}OVP\text{-}UPTH}$ - $V_{ADJ\text{-}OVP\text{-}LOTH}$	**25**	46	**67**	mV
THERMAL SHUTDOWN						
T_{SD}	Thermal Shutdown Temperature	T_J Rising		165		°C
$T_{SD\text{-}HYS}$	Thermal Shutdown Temperature Hysteresis	T_J Falling		30		°C

TYPICAL CHARACTERISTICS

All curves taken for the boost circuit are with 500mA nominal input current and 6 serial LEDs. All curves taken for the SEPIC circuit are with 500mA nominal input current and 3 serial LEDs.T_A = –40°C to 125°C, unless otherwise specified.

Operation Current vs. Temperature

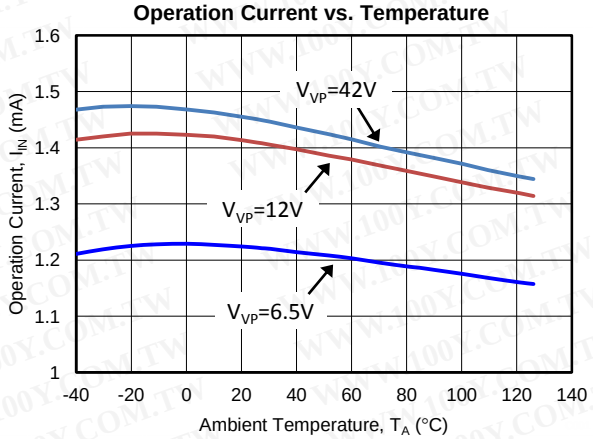

Figure 1.

VCC vs. Temperature (I_{CC} = 0mA)

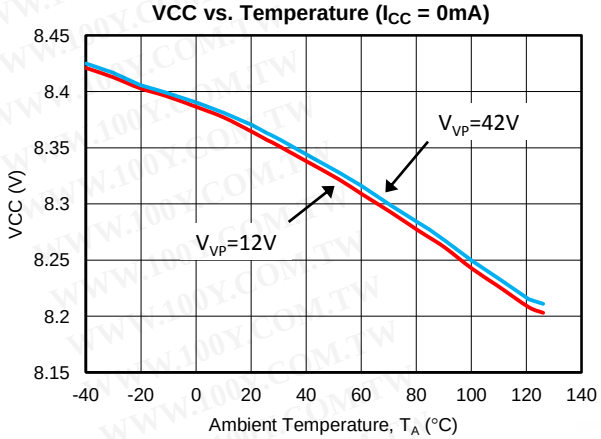

Figure 2.

VCC UVLO Rising Threshold vs. Temperature
V_{VP}=12V, GATE='Hi'

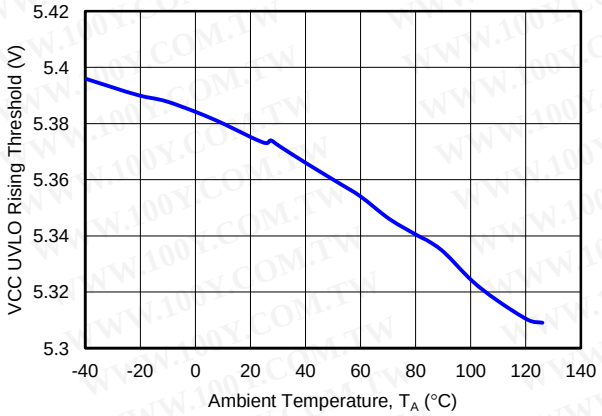

Figure 3.

VCC UVLO Falling Threshold vs. Temperature
V_{VP}=12V, GATE='Low'

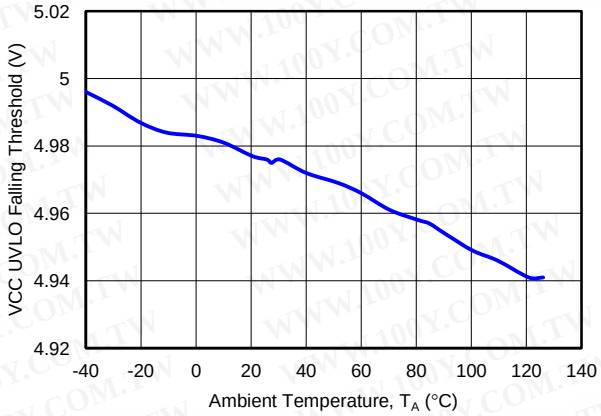

Figure 4.

ACn Turn OFF Threshold vs. Temperature

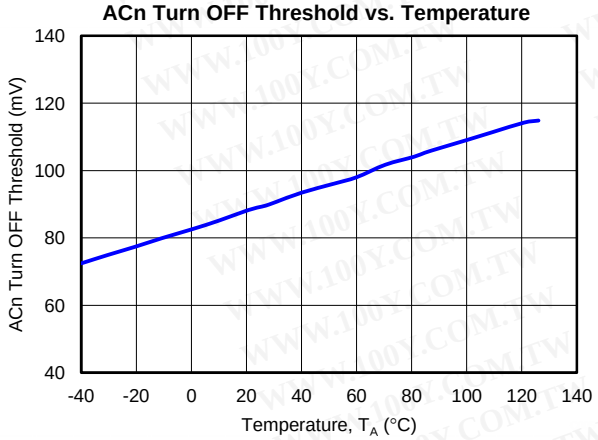

Figure 5.

ACn Turn ON Threshold vs. Temperature

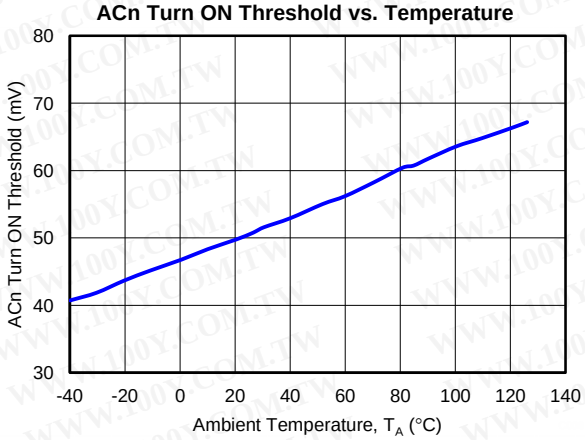

Figure 6.

TYPICAL CHARACTERISTICS (continued)

All curves taken for the boost circuit are with 500mA nominal input current and 6 serial LEDs. All curves taken for the SEPIC circuit are with 500mA nominal input current and 3 serial LEDs.T_A = –40°C to 125°C, unless otherwise specified.

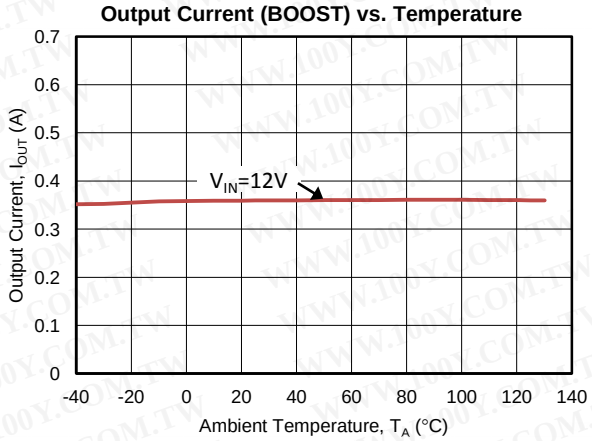

Figure 7.

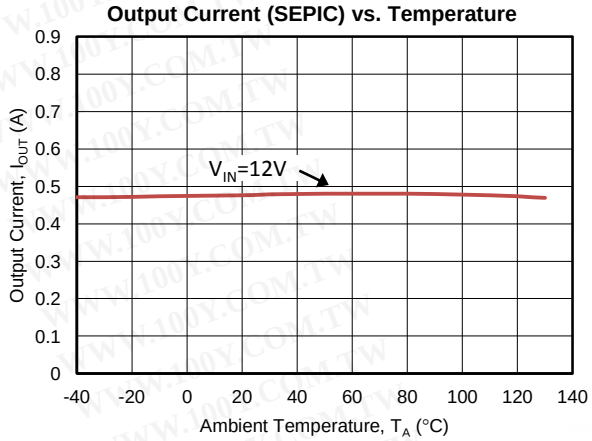

Figure 8.

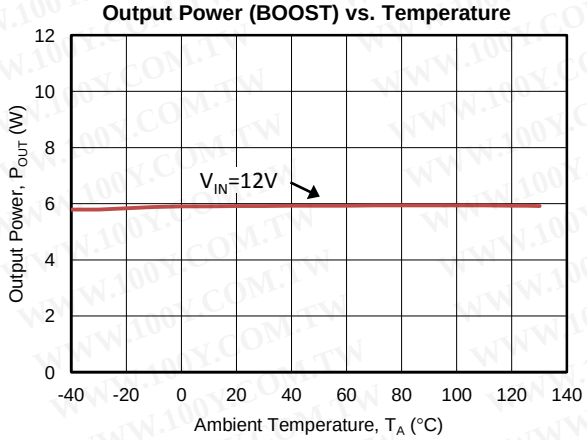

Figure 9.

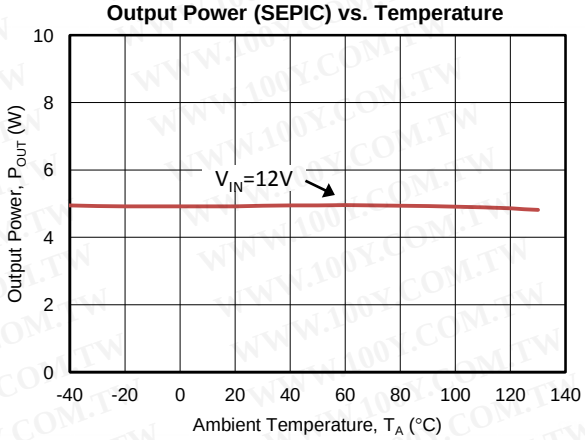

Figure 10.

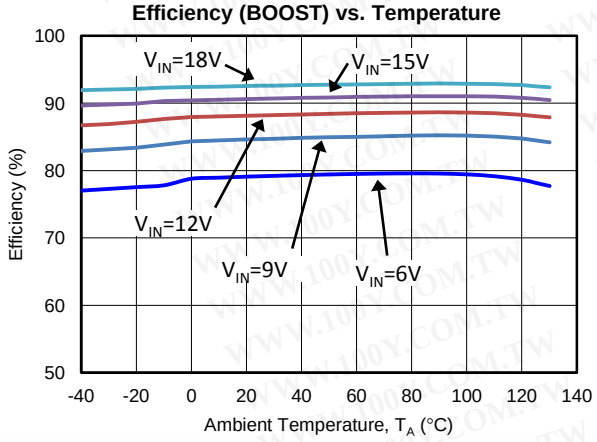

Figure 11.

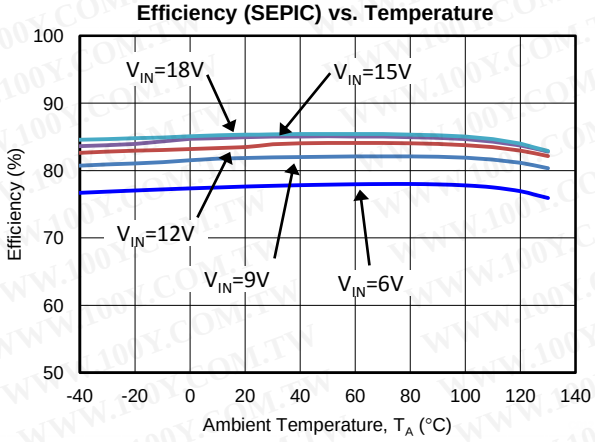

Figure 12.

OVERVIEW

The TPS92560 is a simple hysteretic control switching LED driver for MR16 or AR111 lighting applications. The device accepts DC voltage, AC voltage and electronic transformer as an input power source. The compact application circuit can fit into a generic case of MR16 lamps easily. The hysteretic inductor current control scheme requires no small signal control loop compensation and maintains constant average input current to secure high compatibility to different kinds of input power source. The TPS92560 can be configured to either a step-up or step-up/down LED driver for the use of different number of LEDs. The patent pending current control mechanism allows the use of a single set of component and PCB layout for serving different output power requirements by changing the number of LEDs. The integrating of the active low-side input rectifiers reduces the power loss for voltage rectification and saves two external diodes of a generic bridge rectifier to aim for a simple end application circuit. When the driver is used with an AC voltage source or electronic transformer, the current regulation level increases accordingly to maintain an output current close to the level that when it is used with a DC voltage source. With the output over-voltage protection and over-temperature shutdown functions, the TPS92560 is specifically suitable for the applications that are space limited and need wide acceptance to different power sources.

VCC REGULATOR

The VCC pin is the output of the internal linear regulator for providing an 8.45V typical supply voltage to the MOSFET driver and internal circuits. The output current of the VCC pin is limited to 30mA typical. A low ESR ceramic capacitor of 0.47µF or higher capacitance should be connected across the VCC and SRC pins to supply transient current to the MOSFET driver.

MOSFET DRIVER

The GATE pin is the output of the gate driver which referenced to the SRC pin. The gate driver is powered directly by the VCC regulator which the maximum gate driving current is limited to 30mA typical. To prevent hitting the VCC current limit, it is suggested to use a low gate charge MOSFET when high switching frequency is needed.

THE ADJ PIN

The voltage on the ADJ pin determines the reference voltage for the input current regulation. Typically, the ADJ pin voltage is divided from the output voltage of the circuit by a voltage divider, thus the average input current is adjusted with respect to the number of LEDs used. The voltage of the ADJ pin determines the input current following the expression:

$$I_{IN(nom)} = \frac{V_{VP}}{R_{SEN}} \times \frac{R_{ADJ2}}{R_{ADJ1} + R_{ADJ2}} \quad (1)$$

Output Over-Voltage-Protection

In the TPS92560, a function of output Over-Voltage Protection (OVP) is provided to prevent damaging of the circuit due to an open circuit of the LED. The OVP function is implemented to the ADJ pin. When the voltage of the ADJ pin exceeds 0.384V typical, the OVP circuit disables the MOSFET driver and turns off the main switch to allow the output capacitor to discharge. As the voltage of the ADJ pin decreases to below 0.353V typical, the MOSFET driver is enabled and the TPS92560 returns to normal operation. The triggering threshold of the output voltage is determined by the value of the resistors R_{ADJ1} and R_{ADJ2}, which can be calculated using the following equation:

$$V_{VP} \times \frac{R_{ADJ2}}{R_{ADJ1} + R_{ADJ2}} \leq 0.384V \quad (2)$$

When defining the OVP threshold voltage, it is necessary to certain that the OVP threshold voltage does not exceed the rated voltage of the output rectifier and capacitor to avoid damaging of the circuit.

THE AC1 AND AC2 PINS

The TPS92560 provides two internal active rectifiers for input voltage rectification. Each internal rectifier connects across the ACn pin to GND. These internal active rectifiers function as the low-side diode rectifiers of a generic bridge rectifier. The integrating of the active rectifiers helps in saving two external diodes of a bridge rectifier along with an improvement of power efficiency. For high power applications, for instance, 12W output power, external diode rectifiers can be added across the ACn pin to GND to reduce heat dissipation on the TPS92560.

DETECTION OF POWER SOURCE

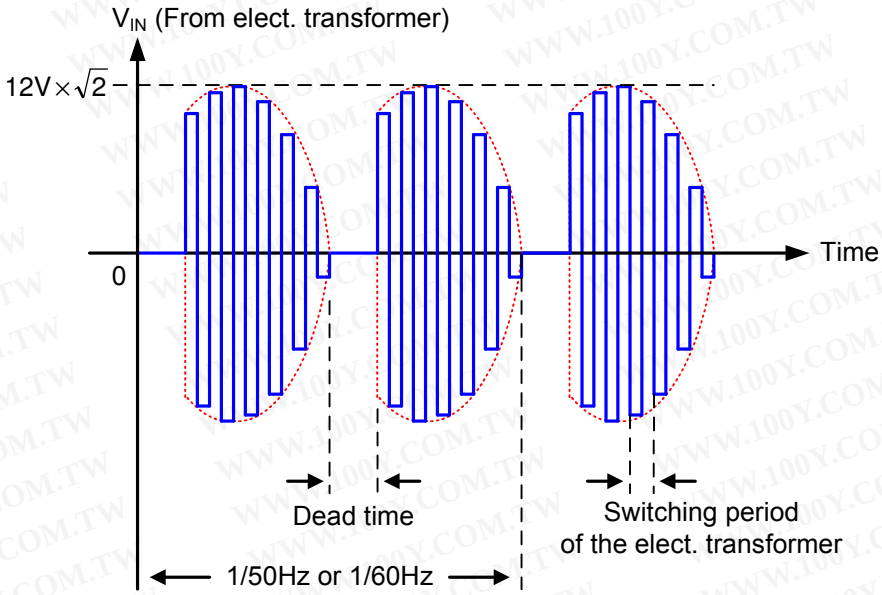

Figure 13. The inherent dead time of the output voltage of an electronic transformer

Both the voltages of a generic AC source (50/60Hz) and an electronic transformer carry certain amount of dead time inherently, as shown in Figure 13. The existing of the dead time leads to a drop of the RMS input power to the driver circuit. In order to compensate the drop of the RMS input power, the ADJ pin sources current to the resistor, R_{ADJ2} to increase the reference voltage for the current regulation loop and in turn increase the RMS input power accordingly when an AC voltage source or electronic transformer is detected. The output current of the ADJ pin for an AC input voltage and electronic transformer are 9.5µA and 11.5µA typical respectively. Practically the amount of the power for compensating the dead time of the input power source differs case to case depending on the characteristics of the power source, the value of the R_{ADJ1} and R_{ADJ2} might need a fine adjustment in accordance to the characteristics of the power source. The additional output power for compensating the dead time of the power sources (ΔP_{LED}) are calculated using the following equations:

For 50/60Hz AC power source:

$$\Delta P_{LED-50/60\ HZ} = V_{IN} \times \frac{R_{ADJ2} \times 9.5\ \mu A}{R_{SEN}} \times \eta \tag{3}$$

For electronic transformer:

$$\Delta P_{LED-ELECT-XFR} = V_{IN} \times \frac{R_{ADJ2} \times 11.5\ \mu A}{R_{SEN}} \times \eta \tag{4}$$

CURRENT REGULATION

In the TPS92560, the input current regulation is attained by limiting the peak and valley of the inductor current. Practically the inductor current sensing is facilitated by detecting the voltage on the resistor, R_{SEN}. Because the current flows through the R_{SEN} is a sum total of the currents of the main switch and LEDs, the voltage drop on the R_{SEN} reflects the current of the inductor that is identical to the input current to the LED driver circuit. Figure 14 shows the waveform of the inductor current ripple with the peak and valley values controlled.

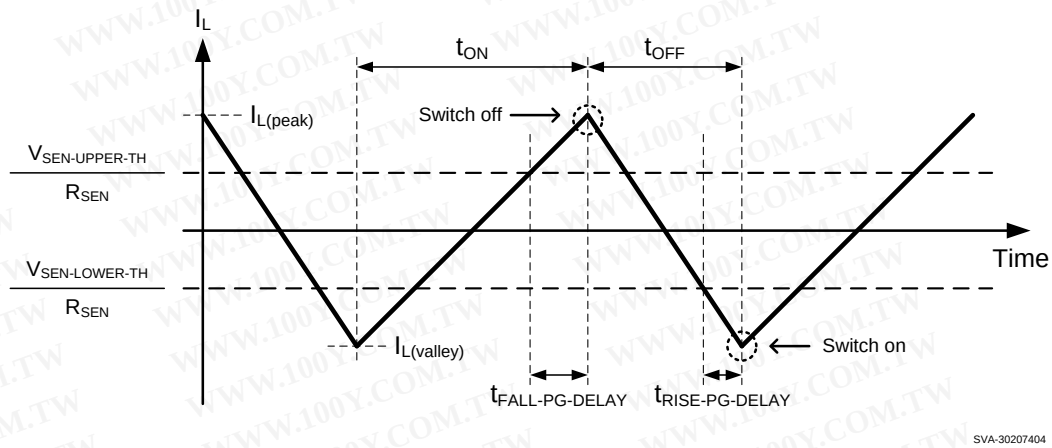

Figure 14. Inductor Current Ripple in Steady State

The voltage of the ADJ pin is determined by the forward voltage of the LED and divided from the V_{VP} by a resistor divider. The equation for calculating the V_{ADJ} as shown in the following expression:

$$V_{ADJ} = V_{VP} \times \frac{R_{ADJ2}}{R_{ADJ1} + R_{ADJ2}} \tag{5}$$

In steady state, the voltage drop on the R_{ADJ1} is identical to the forward voltage of the LED (V_{LED}) and the voltage across the R_{ADJ2} is identical to the voltage across the R_{SEN}. The LED current, I_{LED} is then calculated following the equations:

In steady state:

$$V_{LED} = V_{RADJ1} \tag{6}$$

$$V_{SEN} = V_{RADJ2} \tag{7}$$

$$I_{IN(nom)} = \frac{V_{SEN}}{R_{SEN}} \tag{8}$$

Since

$$P_{LED} = P_{IN} \times \eta \quad \text{where } \eta \text{ is the conversion efficiency} \tag{9}$$

Thus,

$$V_{LED} \times I_{LED} = V_{IN} \times I_{IN(nom)} \times \eta \tag{10}$$

Put the expressions (2) to (4) into (5):

$$I_{LED} = V_{IN} \times \frac{I_{ADJ2} \times R_{ADJ2}}{I_{ADJ1} \times R_{ADJ1} \times R_{SEN}} \times \eta \tag{11}$$

Due to the high input impedance of the ADJ pin, the current flows into the ADJ pin can be neglected and thus I_{RADJ1} equals I_{RADJ2}. The LED current is then calculated following the expressions below:

$$I_{LED} = V_{IN} \times \frac{R_{ADJ2}}{R_{ADJ1} \times R_{SEN}} \times \eta \tag{12}$$

Practically, the conversion efficiency of a boost circuit is almost a constant around 85%. Being assumed that the efficiency term in the I_{LED} expression is a constant, the LED current depends solely on the magnitude of the input voltage, V_{IN}. Without changing a component, the output power of the typical application circuits of the TPS92560 is adjustable by using different number of LEDs.

The output power is calculated by following the expression:

$$P_{LED} = V_{LED} \times V_{IN} \times \frac{R_{ADJ2}}{R_{ADJ1} \times R_{SEN}} \times \eta \tag{13}$$

SWITCHING FREQUENCY (Boost Configuration)

In the following sections, the equations and calculations are limited to the boost configuration only (i.e. the LED forward voltage higher than the input voltage), unless otherwise specified. The application information for the SEPIC and other circuit topologies are available in separate application notes and reference designs. In the boost configuration, including the propagation delay of the control circuit, the ON and OFF times of the main switch are calculated following the expressions:

$$t_{ON} = \left\{ \frac{\left| V_{SEN\text{-}UPPER\text{-}TH} \right| \times L}{R_{SEN} \times [V_{IN} - V_D - I_{IN(nom)} \times (R_L + R_{DS(ON)} + R_{SEN} + R_{AC\text{-}FET})]} + t_{FALL\text{-}PG\text{-}DELAY} \right\} \times 2 \tag{14}$$

$$t_{OFF} = \left\{ \frac{\left| V_{SEN\text{-}LOWER\text{-}TH} \right| \times L}{R_{SEN} \times [V_{LED} - V_{IN} - 2V_D - I_{IN(nom)} \times (R_L + R_{SEN} + R_{AC\text{-}FET})]} + t_{RISE\text{-}PG\text{-}DELAY} \right\} \times 2 \tag{15}$$

In the above equations, the V_D is the forward voltage of D_3, R_L is the DC resistance of L_1, $R_{DS(ON)}$ is the ON resistance of Q_1 and $R_{AC\text{-}FET}$ is the turn ON resistance of the internal active rectifier with respect to the typical application circuit diagram.

Practically the resistance of the R_L, $R_{DS(on)}$ and $R_{AC\text{-}FET}$ is in the order if serveral tenth of mΩ, by assuming a 0.5V diode forward voltage and the sum total of the R_L, $R_{DS(ON)}$ and $R_{AC\text{-}FET}$ is close to 1Ω, the on and off times of Q_1 can be approximated using the following equations:

$$t_{ON} \approx \left\{ \frac{14.9mV \times L}{R_{SEN} \times [V_{IN} - 0.5V - I_{IN(nom)} \times (1 + R_{SEN})]} + 84ns \right\} \times 2 \tag{16}$$

$$t_{OFF} \approx \left\{ \frac{14.9mV \times L}{R_{SEN} \times [V_{LED} - V_{IN} - 1V - I_{IN(nom)} \times (1 + R_{SEN})]} + 68ns \right\} \times 2 \tag{17}$$

With the switching on and OF times determined, the switching frequency can be calculated using the following equation:

$$F_{SW} = \frac{1}{T_{ON} + T_{OFF}} \tag{18}$$

Because of the using of hysteretic control scheme, the switching frequency of the TPS92560 in steady state is dependent on the input voltage, output voltage and inductance of the inductor. Generally a 1 MHz to 1.5 MHz switching frequency is suggested for applications using an electronic transformer as the power source.

INDUCTOR SELECTION (Boost Configuration)

Because of the using of the hysteretic control scheme, the switching frequency of the TPS92560 in a boost configuration can be adjusted in accordance to the value of the inductor being used. Derived from the equations (12) and (13), the value of the inductor can be determined base on the desired switching frequence by using the following equation:

$$L = \frac{\left(\frac{1}{f_{SW}} - 304ns\right) \times R_{SEN}}{\left(\frac{1}{V_{IN} - 0.5V - I_{IN(nom)} \times (1 + R_{SEN})} + \frac{1}{V_{LED} - V_{IN} - 1V - I_{IN(nom)} \times (1 + R_{SEN})}\right) \times 29.8mV} \tag{19}$$

When selecting the inductor, it is essential to ensure the peak inductor current does not exceed the the factory suggested saturation current of the inductor. The values of the peak and valley inductor current are calculated using the following equations:

Peak inductor current:

$$I_{L(peak)} = \frac{[V_{IN} - V_D - I_{IN(nom)} \times (R_L + R_{DS(ON)} + R_{SEN} + R_{AC\text{-}FET})] \times t_{ON}}{2L} + I_{IN(nom)} \tag{20}$$

Valley inductor current:

$$I_{L(valley)} = I_{IN(nom)} - \frac{[V_{LED} - V_{IN} - 2V_D - I_{IN(nom)} \times (R_L + R_{SEN} + R_{AC\text{-}FET})] \times t_{OFF}}{2L} \quad (21)$$

Assume the total resistance of the R_L, $R_{DS(on)}$ and $R_{AC\text{-}FET}$ is 1Ω and the diode drop, V_D equal to 1V, the peak and valley currents of the inductor can be approximated using the following equations:

$$I_{L(peak)} \approx \frac{[V_{IN} - 0.5V - I_{IN(nom)} \times (1 + R_{SEN})] \times t_{ON}}{2L} + I_{IN(nom)} \quad (22)$$

$$I_{L(valley)} \approx I_{IN(nom)} - \frac{[V_{LED} - V_{IN} - 1V - I_{IN(nom)} \times (1 + R_{SEN})] \times t_{OFF}}{2L} \quad (23)$$

In order not to saturate the inductor, an inductor with a factory guranteed saturation current (I_{SAT}) 20% higher than the $I_{L(peak)}$ is suggested. Thus the I_{SAT} of the inductor should fulfill the following requirement:

$$I_{SAT} \geq I_{L(peak)} \times 1.2 \quad (24)$$

THERMAL SHUTDOWN

The TPS92560 includes a thermal shutdown circuitry that ceases the operation of the device to avoid permanent damage. The threshold for thermal shutdown is 165°C with a 30°C hysteresis typical. During thermal shutdown the VCC regulator is disabled and the MOSFET is turned off.

INPUT SURGE VOLTAGE PROTECTION

When use with an electronic transformer, the surge voltage across the input terminals can be sufficiently high to damage the TPS92560 depending on the charactistics of the electronic transformer. To against potential damaging due to the input surge voltage, a 36V zener diode can be connected across the input bridge rectifier as shown in Figure 15.

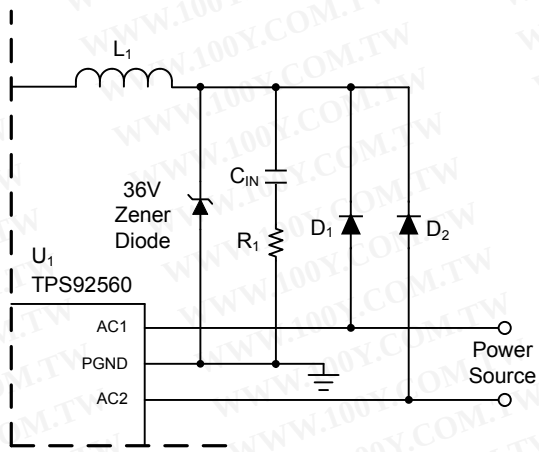

Figure 15. Input surge voltage protection using an external zener diode

EXAMPLE APPLICATION CIRCUITS

In the applications that need true regulation of the LED current, the intrinsic input current control loop can be changed to monitor the LED current by adding an external LED current sensing circuit. Figure 16 and Figure 19 show the example circuits for true LED current regulation in boost and SEPIC configurations respectively. In the circuits, the U_3 (TL431) maintains a constant 2.5V voltage drop on the resistors, R_3 and R_7. Because the U_2 (TL431) maintains a constant voltage drop on the R_3, the power dissipation on the output current sensing resistor, R_7 can be minimized by setting a low voltage drop on the R_7. Because the change of the current flowing through the R_7 reflects in the change of the cathode current of U_3 and eventually adjusts the ADJ pin voltage of the TPS92560, the LED current is regulated independent of the change of the input voltage.

Boost Application Circuit with LED Current Regulation

The specifications of the boost application circuit in Figure 16 are as listed below:

- Objective input voltage: 3VDC to 18VDC / 12VAC(50Hz or 60Hz) / Generic MR16 electronic transformer
- LED forward voltage: 20VDC typical
- Output current: 300mA typical (@12VDC input)
- Output power: 6W typical (@12VDC input)

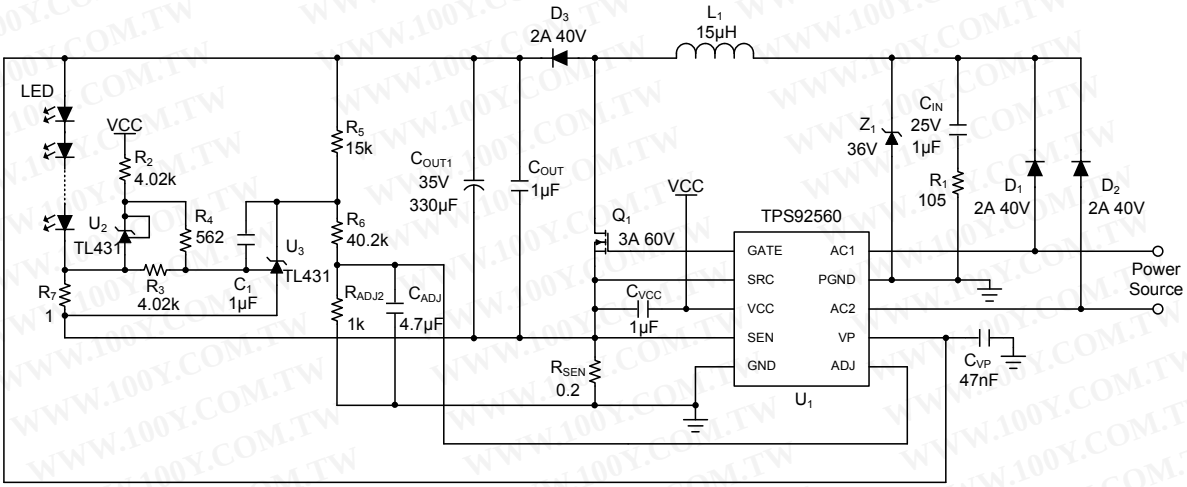

Figure 16. Using the TPS92560 in SEPIC configuration with LED current regulation

Typical Characteristics of the Boost Example Circuit in Figure 16

All curves taken at V_{IN} = 3V to 18VDC in boost configuration, with 300mA nominal output current, 6 serial LEDs. T_A = 25°C.

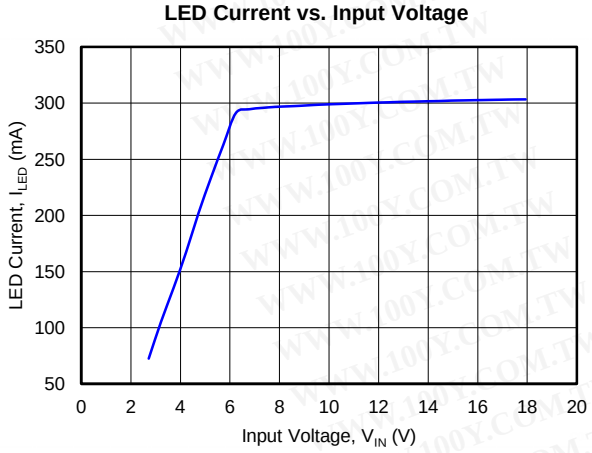

Figure 17.

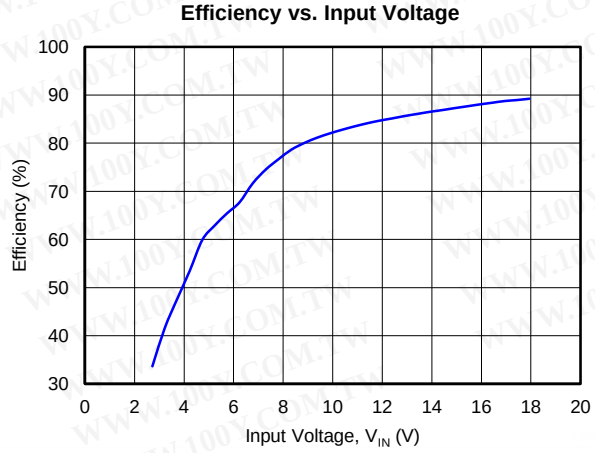

Figure 18.

SEPIC Application Circuit with LED Current Regulation

The specifications of the SEPIC application circuit in Figure 16 are as listed below:

- Objective input voltage: 3VDC to 18VDC / 12VAC(50Hz or 60Hz) / Generic MR16 electronic transformer
- LED forward voltage: 13VDC typical
- Output current: 300mA typical (@12VDC input)
- Output power: 4W typical (@12VDC input)

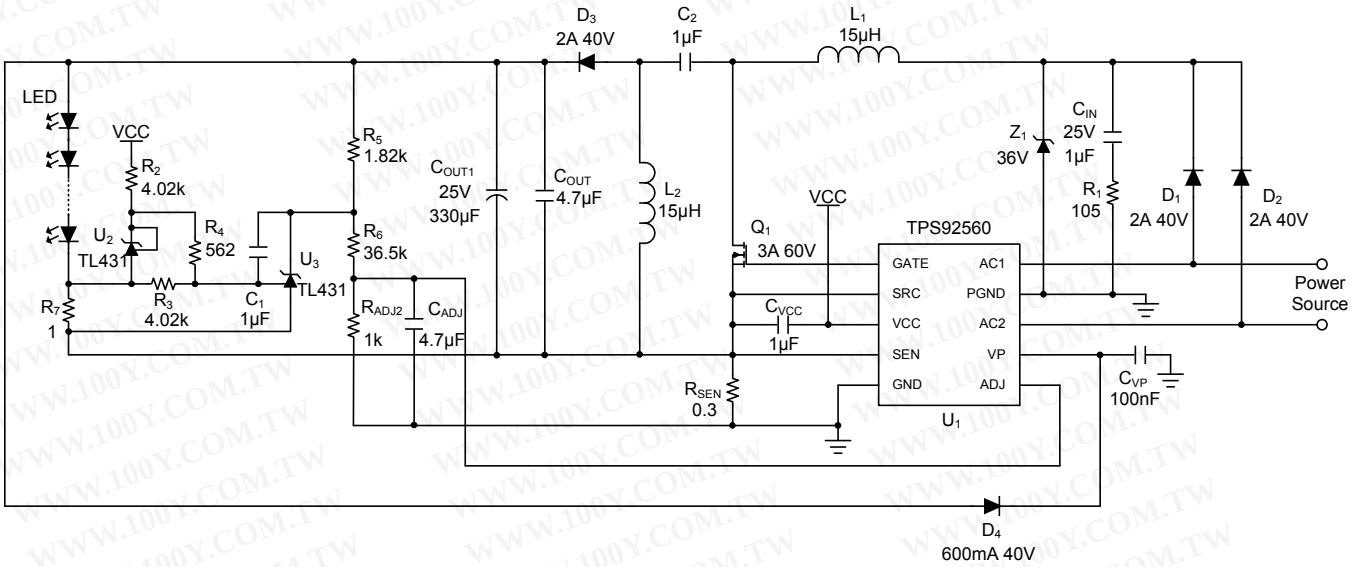

Figure 19. Using the TPS92560 in SEPIC configuration with LED current regulation

Typical Characteristics of the SEPIC Example Circuit in Figure 19

All curves taken at V_{IN} = 3V to 18VDC in SEPIC configuration, with 300mA nominal output current, 4 serial LEDs. T_A = 25°C.

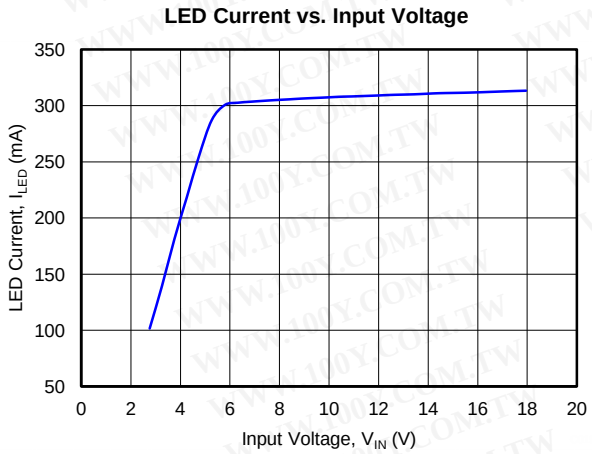

Figure 20.

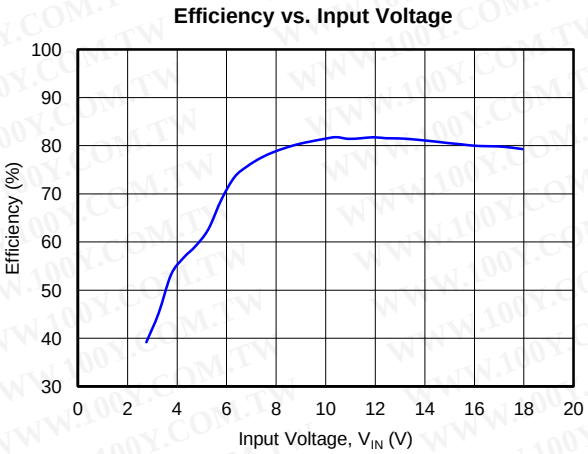

Figure 21.

PACKAGING INFORMATION

Orderable Device	Status (1)	Package Type	Package Drawing	Pins	Package Qty	Eco Plan (2)	Lead/Ball Finish	MSL Peak Temp (3)	Op Temp (°C)	Device Marking (4/5)	Samples
TPS92560DGQ/NOPB	ACTIVE	MSOP-PowerPAD	DGQ	10	1000	Green (RoHS & no Sb/Br)	CU SN	Level-3-260C-168 HR	-40 to 125	SN3B	Samples
TPS92560DGQR/NOPB	ACTIVE	MSOP-PowerPAD	DGQ	10	3500	Green (RoHS & no Sb/Br)	CU SN	Level-3-260C-168 HR	-40 to 125	SN3B	Samples

(1) The marketing status values are defined as follows:
ACTIVE: Product device recommended for new designs.
LIFEBUY: TI has announced that the device will be discontinued, and a lifetime-buy period is in effect.
NRND: Not recommended for new designs. Device is in production to support existing customers, but TI does not recommend using this part in a new design.
PREVIEW: Device has been announced but is not in production. Samples may or may not be available.
OBSOLETE: TI has discontinued the production of the device.

(2) Eco Plan - The planned eco-friendly classification: Pb-Free (RoHS), Pb-Free (RoHS Exempt), or Green (RoHS & no Sb/Br) - please check http://www.ti.com/productcontent for the latest availability information and additional product content details.
TBD: The Pb-Free/Green conversion plan has not been defined.
Pb-Free (RoHS): TI's terms "Lead-Free" or "Pb-Free" mean semiconductor products that are compatible with the current RoHS requirements for all 6 substances, including the requirement that lead not exceed 0.1% by weight in homogeneous materials. Where designed to be soldered at high temperatures, TI Pb-Free products are suitable for use in specified lead-free processes.
Pb-Free (RoHS Exempt): This component has a RoHS exemption for either 1) lead-based flip-chip solder bumps used between the die and package, or 2) lead-based die adhesive used between the die and leadframe. The component is otherwise considered Pb-Free (RoHS compatible) as defined above.
Green (RoHS & no Sb/Br): TI defines "Green" to mean Pb-Free (RoHS compatible), and free of Bromine (Br) and Antimony (Sb) based flame retardants (Br or Sb do not exceed 0.1% by weight in homogeneous material)

(3) MSL, Peak Temp. -- The Moisture Sensitivity Level rating according to the JEDEC industry standard classifications, and peak solder temperature.

(4) There may be additional marking, which relates to the logo, the lot trace code information, or the environmental category on the device.

(5) Multiple Device Markings will be inside parentheses. Only one Device Marking contained in parentheses and separated by a "~" will appear on a device. If a line is indented then it is a continuation of the previous line and the two combined represent the entire Device Marking for that device.

IMPORTANT NOTICE

Texas Instruments Incorporated and its subsidiaries (TI) reserve the right to make corrections, enhancements, improvements and other changes to its semiconductor products and services per JESD46, latest issue, and to discontinue any product or service per JESD48, latest issue. Buyers should obtain the latest relevant information before placing orders and should verify that such information is current and complete. All semiconductor products (also referred to herein as “components”) are sold subject to TI’s terms and conditions of sale supplied at the time of order acknowledgment.

TI warrants performance of its components to the specifications applicable at the time of sale, in accordance with the warranty in TI’s terms and conditions of sale of semiconductor products. Testing and other quality control techniques are used to the extent TI deems necessary to support this warranty. Except where mandated by applicable law, testing of all parameters of each component is not necessarily performed.

TI assumes no liability for applications assistance or the design of Buyers’ products. Buyers are responsible for their products and applications using TI components. To minimize the risks associated with Buyers’ products and applications, Buyers should provide adequate design and operating safeguards.

TI does not warrant or represent that any license, either express or implied, is granted under any patent right, copyright, mask work right, or other intellectual property right relating to any combination, machine, or process in which TI components or services are used. Information published by TI regarding third-party products or services does not constitute a license to use such products or services or a warranty or endorsement thereof. Use of such information may require a license from a third party under the patents or other intellectual property of the third party, or a license from TI under the patents or other intellectual property of TI.

Reproduction of significant portions of TI information in TI data books or data sheets is permissible only if reproduction is without alteration and is accompanied by all associated warranties, conditions, limitations, and notices. TI is not responsible or liable for such altered documentation. Information of third parties may be subject to additional restrictions.

Resale of TI components or services with statements different from or beyond the parameters stated by TI for that component or service voids all express and any implied warranties for the associated TI component or service and is an unfair and deceptive business practice. TI is not responsible or liable for any such statements.

Buyer acknowledges and agrees that it is solely responsible for compliance with all legal, regulatory and safety-related requirements concerning its products, and any use of TI components in its applications, notwithstanding any applications-related information or support that may be provided by TI. Buyer represents and agrees that it has all the necessary expertise to create and implement safeguards which anticipate dangerous consequences of failures, monitor failures and their consequences, lessen the likelihood of failures that might cause harm and take appropriate remedial actions. Buyer will fully indemnify TI and its representatives against any damages arising out of the use of any TI components in safety-critical applications.

In some cases, TI components may be promoted specifically to facilitate safety-related applications. With such components, TI’s goal is to help enable customers to design and create their own end-product solutions that meet applicable functional safety standards and requirements. Nonetheless, such components are subject to these terms.

No TI components are authorized for use in FDA Class III (or similar life-critical medical equipment) unless authorized officers of the parties have executed a special agreement specifically governing such use.

Only those TI components which TI has specifically designated as military grade or “enhanced plastic” are designed and intended for use in military/aerospace applications or environments. Buyer acknowledges and agrees that any military or aerospace use of TI components which have ***not*** been so designated is solely at the Buyer's risk, and that Buyer is solely responsible for compliance with all legal and regulatory requirements in connection with such use.

TI has specifically designated certain components as meeting ISO/TS16949 requirements, mainly for automotive use. In any case of use of non-designated products, TI will not be responsible for any failure to meet ISO/TS16949.

Products		**Applications**	
Audio	www.ti.com/audio	Automotive and Transportation	www.ti.com/automotive
Amplifiers	amplifier.ti.com	Communications and Telecom	www.ti.com/communications
Data Converters	dataconverter.ti.com	Computers and Peripherals	www.ti.com/computers
DLP® Products	www.dlp.com	Consumer Electronics	www.ti.com/consumer-apps
DSP	dsp.ti.com	Energy and Lighting	www.ti.com/energy
Clocks and Timers	www.ti.com/clocks	Industrial	www.ti.com/industrial
Interface	interface.ti.com	Medical	www.ti.com/medical
Logic	logic.ti.com	Security	www.ti.com/security
Power Mgmt	power.ti.com	Space, Avionics and Defense	www.ti.com/space-avionics-defense
Microcontrollers	microcontroller.ti.com	Video and Imaging	www.ti.com/video
RFID	www.ti-rfid.com		
OMAP Applications Processors	www.ti.com/omap	**TI E2E Community**	e2e.ti.com
Wireless Connectivity	www.ti.com/wirelessconnectivity		

Mailing Address: Texas Instruments, Post Office Box 655303, Dallas, Texas 75265