HD74HC273

Octal D-type Flip-Flops (with Clear)

REJ03D0604-0300
Rev.3.00
Mar 25, 2009

Description

This device contains 8 master-slave flip-flops with a common clock and common clear. Data on the D input having the specified setup and hold times is transferred to the Q output on the low to high transition of the clock input. The clear input when low, sets all outputs to a low state.

Features

- High Speed Operation: t_{pd} (Clock to Q) = 18 ns typ (C_L = 50 pF)
- High Output Current: Fanout of 10 LSTTL Loads
- Wide Operating Voltage: V_{CC} = 2 to 6 V
- Low Input Current: 1 µA max
- Low Quiescent Supply Current: I_{CC} (static) = 4 µA max (Ta = 25°C)
- Ordering Information

Part Name	Package Type	Package Code (Previous Code)	Package Abbreviation	Taping Abbreviation (Quantity)
HD74HC273P	DILP-20 pin	PRDP0020AC-B (DP-20NEV)	P	—
HD74HC273FPEL	SOP-20 pin (JEITA)	PRSP0020DD-B (FP-20DAV)	FP	EL (2,000 pcs/reel)
HD74HC273RPEL	SOP-20 pin (JEDEC)	PRSP0020DC-A (FP-20DBV)	RP	EL (1,000 pcs/reel)
HD74HC273TELL	TSSOP-20 pin	PTSP0020JB-A (TTP-20DAV)	T	ELL (2,000 pcs/reel)

Note: Please consult the sales office for the above package availability.

Function Table

Inputs			Output
Clear	Clock	D	Q
L	X	X	L
H	↑	H	H
H	↑	L	L
H	L	X	No change
H	↓	X	No change

Note 1. H: high level, L: low level, X: irrelevant

勝 特 力 材 料 886-3-5753170
胜特力电子(上海) 86-21-34970699
胜特力电子(深圳) 86-755-83298787
Http://www.100y.com.tw

Pin Arrangement

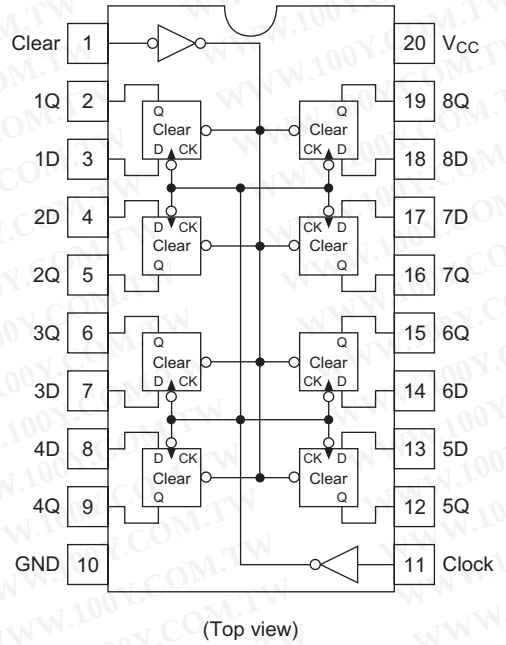

Logic Diagram

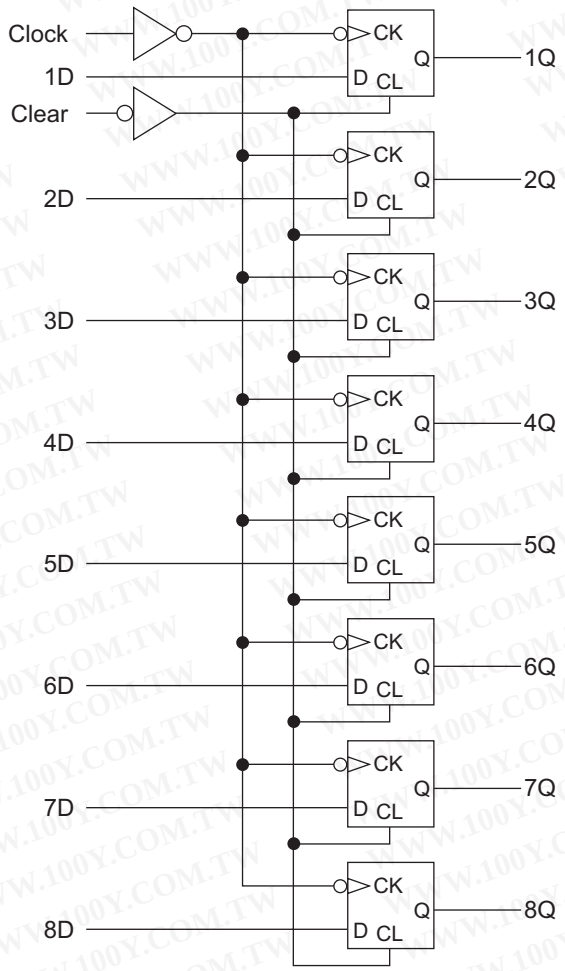

Absolute Maximum Ratings

Item	Symbol	Ratings	Unit
Supply voltage range	V_{CC}	–0.5 to 7.0	V
Input / Output voltage	V_{IN}, V_{OUT}	–0.5 to V_{CC} +0.5	V
Input / Output diode current	I_{IK}, I_{OK}	±20	mA
Output current	I_O	±25	mA
V_{CC}, GND current	I_{CC} or I_{GND}	±50	mA
Power dissipation	P_T	500	mW
Storage temperature	Tstg	–65 to +150	°C

Note: The absolute maximum ratings are values, which must not individually be exceeded, and furthermore, no two of which may be realized at the same time.

Recommended Operating Conditions

Item	Symbol	Ratings	Unit	Conditions
Supply voltage	V_{CC}	2 to 6	V	
Input / Output voltage	V_{IN}, V_{OUT}	0 to V_{CC}	V	
Operating temperature	Ta	–40 to 85	°C	
Input rise / fall time[*1]	t_r, t_f	0 to 1000	ns	V_{CC} = 2.0 V
		0 to 500		V_{CC} = 4.5 V
		0 to 400		V_{CC} = 6.0 V

Notes: 1. This item guarantees maximum limit when one input switches.
Waveform: Refer to test circuit of switching characteristics.

Electrical Characteristics

Item	Symbol	V_{CC} (V)	Ta = 25°C			Ta = –40 to+85°C		Unit	Test Conditions	
			Min	Typ	Max	Min	Max			
Input voltage	V_{IH}	2.0	1.5	—	—	1.5	—	V		
		4.5	3.15	—	—	3.15	—			
		6.0	4.2	—	—	4.2	—			
	V_{IL}	2.0	—	—	0.5	—	0.5	V		
		4.5	—	—	1.35	—	1.35			
		6.0	—	—	1.8	—	1.8			
Output voltage	V_{OH}	2.0	1.9	2.0	—	1.9	—	V	Vin = V_{IH} or V_{IL}	I_{OH} = –20 µA
		4.5	4.4	4.5	—	4.4	—			
		6.0	5.9	6.0	—	5.9	—			
		4.5	4.18	—	—	4.13	—			I_{OH} = –4 mA
		6.0	5.68	—	—	5.63	—			I_{OH} = –5.2 mA
	V_{OL}	2.0	—	0.0	0.1	—	0.1	V	Vin = V_{IH} or V_{IL}	I_{OL} = 20 µA
		4.5	—	0.0	0.1	—	0.1			
		6.0	—	0.0	0.1	—	0.1			
		4.5	—	—	0.26	—	0.33			I_{OL} = 4 mA
		6.0	—	—	0.26	—	0.33			I_{OL} = 5.2 mA
Off-state output current	I_{OZ}	6.0	—	—	±0.5	—	±5.0	µA	Vin = V_{IH} or V_{IL}, Vout = V_{CC} or GND	
Input current	Iin	6.0	—	—	±0.1	—	±1.0	µA	Vin = V_{CC} or GND	
Quiescent supply current	I_{CC}	6.0	—	—	4.0	—	40	µA	Vin = V_{CC} or GND, Iout = 0 µA	

Switching Characteristics

(C_L = 50 pF, Input t_r = t_f = 6 ns)

Item	Symbol	V_{CC} (V)	Ta = 25°C			Ta = –40 to +85°C		Unit	Test Conditions
			Min	Typ	Max	Min	Max		
Maximum clock frequency	f_{max}	2.0	—	—	6	—	5	MHz	
		4.5	—	—	30	—	24		
		6.0	—	—	35	—	28		
Propagation delay time	t_{PHL}	2.0	—	—	145	—	180	ns	Clock to Q
		4.5	—	18	29	—	36		
		6.0	—	—	25	—	31		
	t_{PLH}	2.0	—	—	145	—	180	ns	
		4.5	—	18	29	—	36		
		6.0	—	—	25	—	31		
	t_{PHL}	2.0	—	—	145	—	180	ns	Clear to Q
		4.5	—	15	29	—	36		
		6.0	—	—	25	—	31		
Setup time	t_{su}	2.0	100	—	—	125	—	ns	Data to clock
		4.5	20	2	—	25	—		
		6.0	17	—	—	21	—		
Hold time	t_h	2.0	5	—	—	5	—	ns	Clock to data
		4.5	5	0	—	5	—		
		6.0	5	—	—	5	—		
Removal time	t_{rem}	2.0	100	—	—	125	—	ns	Clear to clock
		4.5	20	–1	—	25	—		
		6.0	17	—	—	21	—		
Pulse width	t_w	2.0	80	—	—	100	—	ns	Clock, clear
		4.5	16	8	—	20	—		
		6.0	14	—	—	17	—		
Output rise/fall time	t_{TLH} t_{THL}	2.0	—	—	75	—	95	ns	
		4.5	—	5	15	—	19		
		6.0	—	—	13	—	16		
Input capacitance	Cin	—	—	5	10	—	10	pF	

Test Circuit

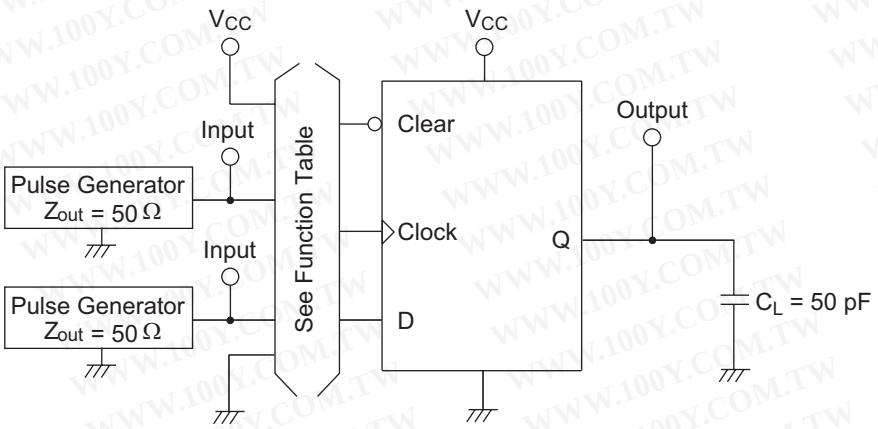

Note : 1. C_L includes probe and jig capacitance.

Waveforms

• Waveform – 1

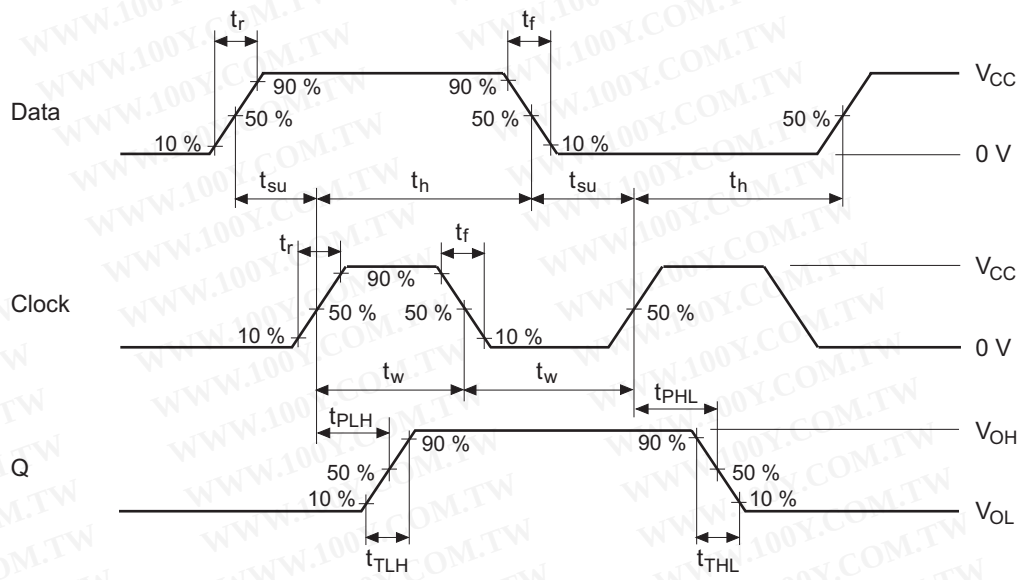

• Waveform – 2

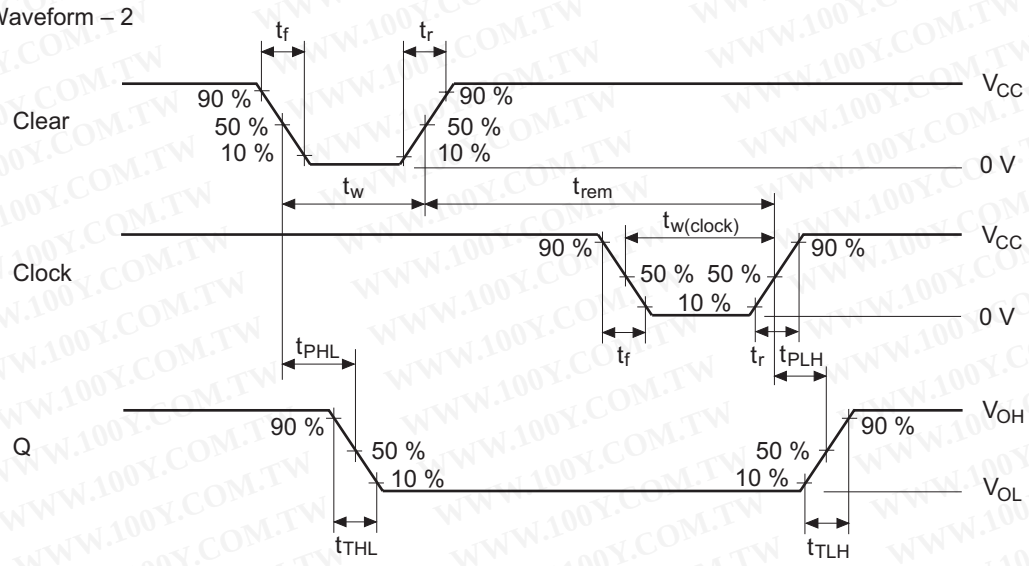

Notes : 1. Input pulse : PRR ≤ 1 MHz, Zo = 50 Ω, t_r ≤ 6 ns, t_f ≤ 6 ns
2. The output are measured one at a time with one transition per measurement.

Package Dimensions

JEITA Package Code	RENESAS Code	Previous Code	MASS[Typ.]
P-DIP20-6.3x24.5-2.54	PRDP0020AC-B	DP-20NEV	1.26g

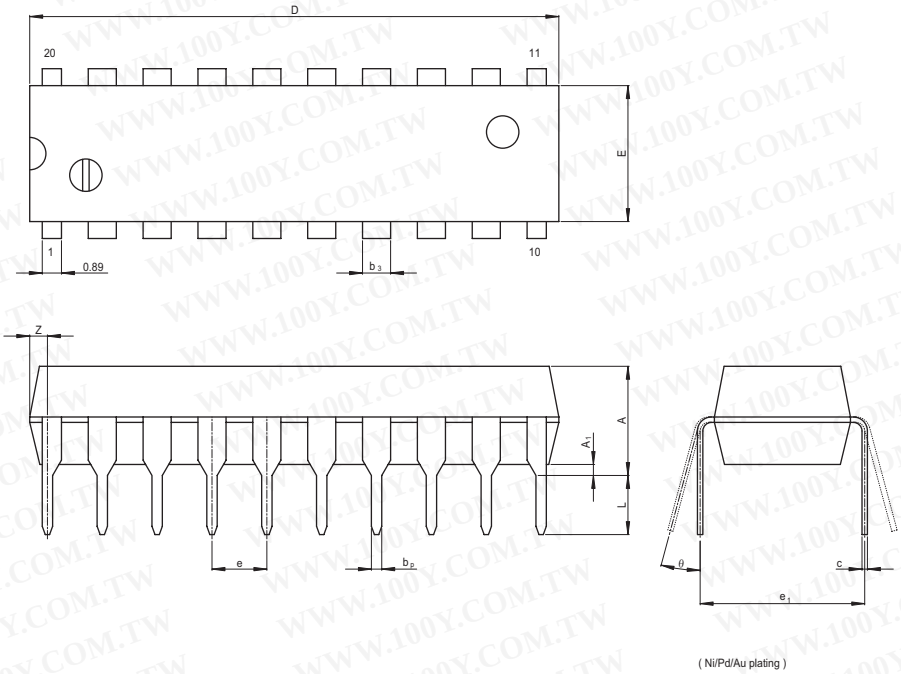

Reference Symbol	Dimension in Millimeters		
	Min	Nom	Max
e_1	—	7.62	—
D	—	24.50	25.40
E	—	6.30	7.00
A	—	—	5.08
A_1	0.51	—	—
b_p	0.40	0.48	0.56
b_3	—	1.30	—
c	0.19	0.25	0.31
θ	0°	—	15°
e	2.29	2.54	2.79
Z	—	—	1.27
L	2.54	—	—

JEITA Package Code	RENESAS Code	Previous Code	MASS[Typ.]
P-SOP20-5.5x12.6-1.27	PRSP0020DD-B	FP-20DAV	0.31g

NOTE)
1. DIMENSIONS"*1 (Nom)"AND"*2" DO NOT INCLUDE MOLD FLASH.
2. DIMENSION"*3"DOES NOT INCLUDE TRIM OFFSET.

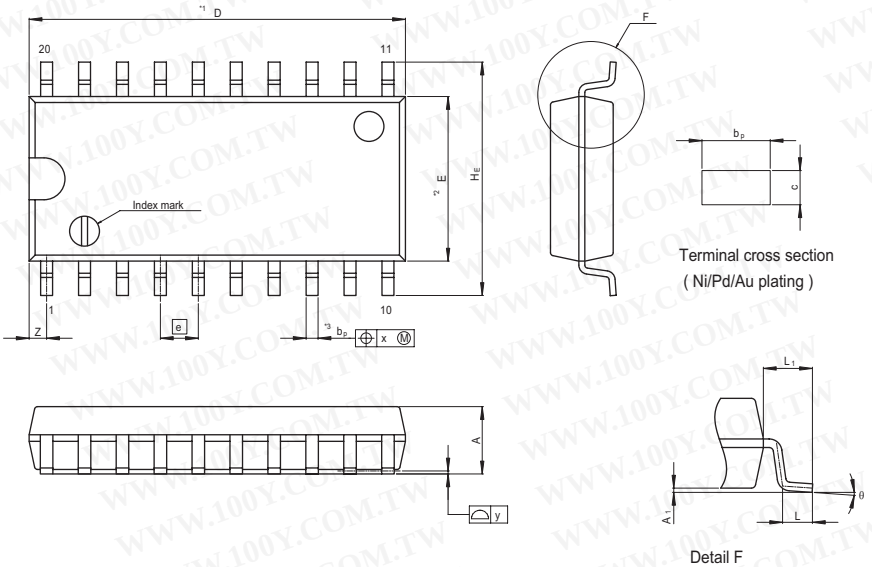

Reference Symbol	Dimension in Millimeters		
	Min	Nom	Max
D	—	12.60	13.0
E	—	5.50	—
A_2	—	—	—
A_1	0.00	0.10	0.20
A	—	—	2.20
b_p	0.34	0.40	0.46
b_1	—	—	—
c	0.15	0.20	0.25
c_1	—	—	—
θ	0°	—	8°
H_E	7.50	7.80	8.00
e	—	1.27	—
x	—	—	0.12
y	—	—	0.15
Z	—	—	0.80
L	0.50	0.70	0.90
L_1	—	1.15	—

JEITA Package Code	RENESAS Code	Previous Code	MASS[Typ.]
P-SOP20-7.5x12.8-1.27	PRSP0020DC-A	FP-20DBV	0.52g

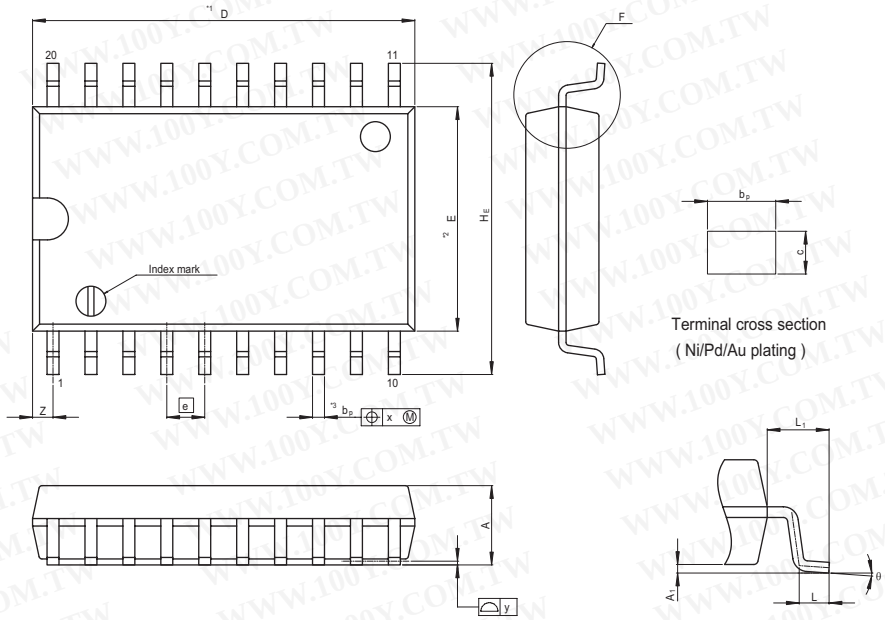

NOTE)
1. DIMENSIONS"*1 (Nom)"AND"*2"
@ DO NOT INCLUDE MOLD FLASH.
2. DIMENSION"*3"DOES NOT
@ INCLUDE TRIM OFFSET.

Reference Symbol	Dimension in Millimeters		
	Min	Nom	Max
D	—	12.80	13.2
E	—	7.50	—
A_2	—	—	—
A_1	0.10	0.20	0.30
A	—	—	2.65
b_p	0.34	0.40	0.46
b_1	—	—	—
c	0.20	0.25	0.30
c_1	—	—	—
θ	0°	—	8°
H_E	10.00	10.40	10.65
e	—	1.27	—
x	—	—	0.12
y	—	—	0.15
Z	—	—	0.935
L	0.40	0.70	1.27
L_1	—	1.45	—

JEITA Package Code	RENESAS Code	Previous Code	MASS[Typ.]
P-TSSOP20-4.4x6.5-0.65	PTSP0020JB-A	TTP-20DAV	0.07g

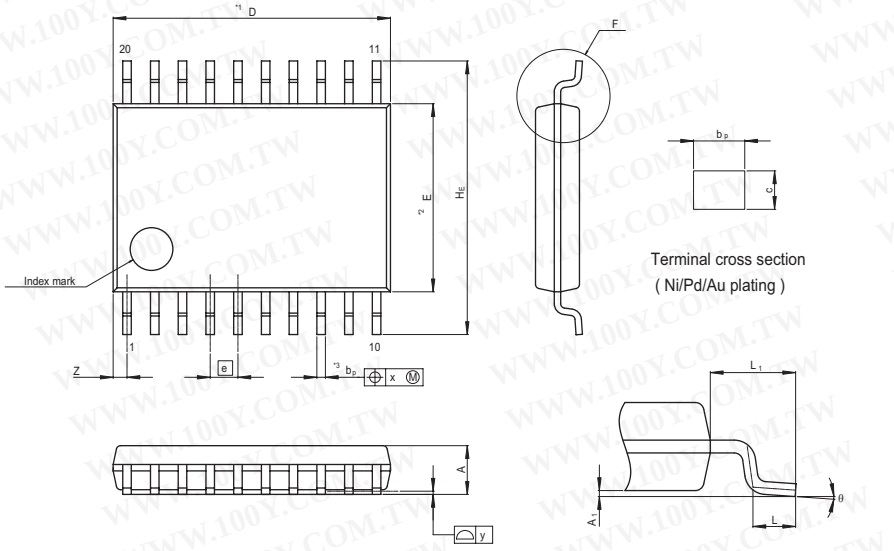

NOTE)
1. DIMENSIONS"*1 (Nom)"AND"*2"
DO NOT INCLUDE MOLD FLASH.
2. DIMENSION"*3"DOES NOT
INCLUDE TRIM OFFSET.

Reference Symbol	Dimension in Millimeters		
	Min	Nom	Max
D	—	6.50	6.80
E	—	4.40	—
A_2	—	—	—
A_1	0.03	0.07	0.10
A	—	—	1.10
b_p	0.15	0.20	0.25
b_1	—	—	—
c	0.10	0.15	0.20
c_1	—	—	—
θ	0°	—	8°
H_E	6.20	6.40	6.60
e	—	0.65	—
x	—	—	0.13
y	—	—	0.10
Z	—	—	0.65
L	0.4	0.5	0.6
L_1	—	1.0	—

勝 特 力 材 料 886-3-5753170
胜特力电子(上海) 86-21-34970699
胜特力电子(深圳) 86-755-83298787
Http://www.100y.com.tw