TOSHIBA CMOS Digital Integrated Circuit Silicon Monolithic

TC74HC4020AP, TC74HC4020AF
TC74HC4040AP, TC74HC4040AF

TC74HC4020AP/AF 14-Stage Binary Counter
TC74HC4040AP/AF 12-Stage Binary Counter

The TC74HC4020A/TC74HC4040A are high speed CMOS BINARY COUNTER/DIVIDERs fabricated with silicon gate C^2MOS technology.

They achieve the high speed operetion similar to equivalent LSTTL while maintaining the CMOS dissipation.

The TC74HC4020A is a 14-STAGE BINARY COUNTER, and the TC74HC4040A is a 12-STAGE BINARY COUNTER.

Setting CLR to high resets the counter to low.

A negative transition on the CK input brings one increment into the counter.

The TC74HC4020A provides 12 divided outputs: 1'st stage and stage 4 thru stage 14. At Q14, a 1/16384 divided frequency will be output.

The TC74HC4040A provides all divided output stages, and at Q12, a 1/4096 divided frequency will be output.

All inputs are equipped with protection circuits against static discharge or transient excess voltage.

TC74HC4020AP, TC74HC4040AP

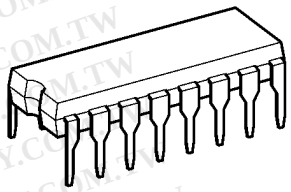

DIP16-P-300-2.54A

TC74HC4020AF, TC74HC4040AF

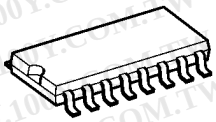

SOP16-P-300-1.27A

Weight
DIP16-P-300-2.54A : 1.00 g (typ.)
SOP16-P-300-1.27A : 0.18 g (typ.)

Features

- High speed: f_{max} = 73 MHz (typ.) at V_{CC} = 5 V
- Low power dissipation: I_{CC} = 4 μA (max) at Ta = 25°C
- High noise immunity: $V_{NIH} = V_{NIL}$ = 28% V_{CC} (min)
- Output drive capability: 10 LSTTL loads
- Symmetrical output impedance: $|I_{OH}| = I_{OL}$ = 4 mA (min)
- Balanced propagation delays: $t_{pLH} \simeq t_{pHL}$
- Wide operating voltage range: V_{CC} (opr) = 2 to 6 V
- Pin and function compatible with 4020B/4040B

Start of commercial production
1988-05

Pin Assignment

TC74HC4020A

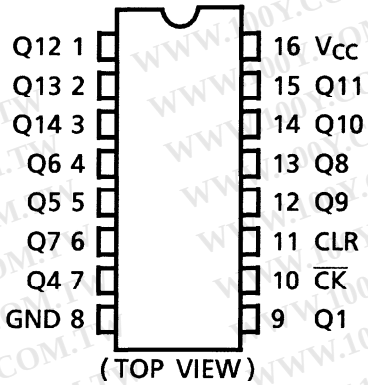

TC74HC4040A

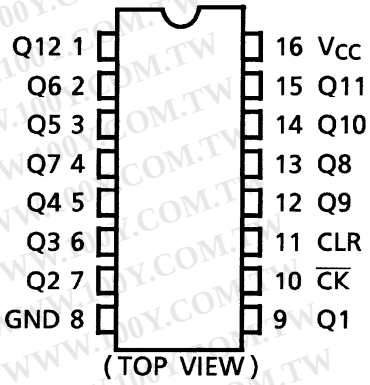

IEC Logic Symbol

TC74HC4020A

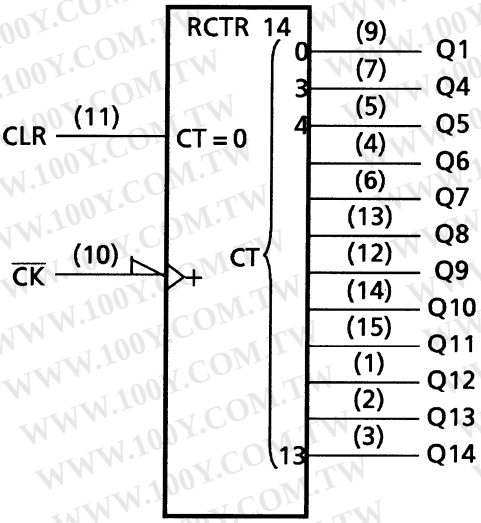

TC74HC4040A

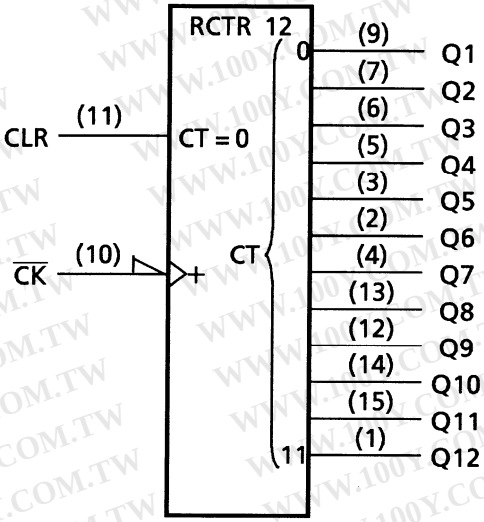

Truth Table

$\overline{CK}$	CLR	Output State
X	H	All Output = "L"
↑	L	No Change
↓	L	Adovance to Next State

X: Don't care

System Diagram

TC74HC4020A

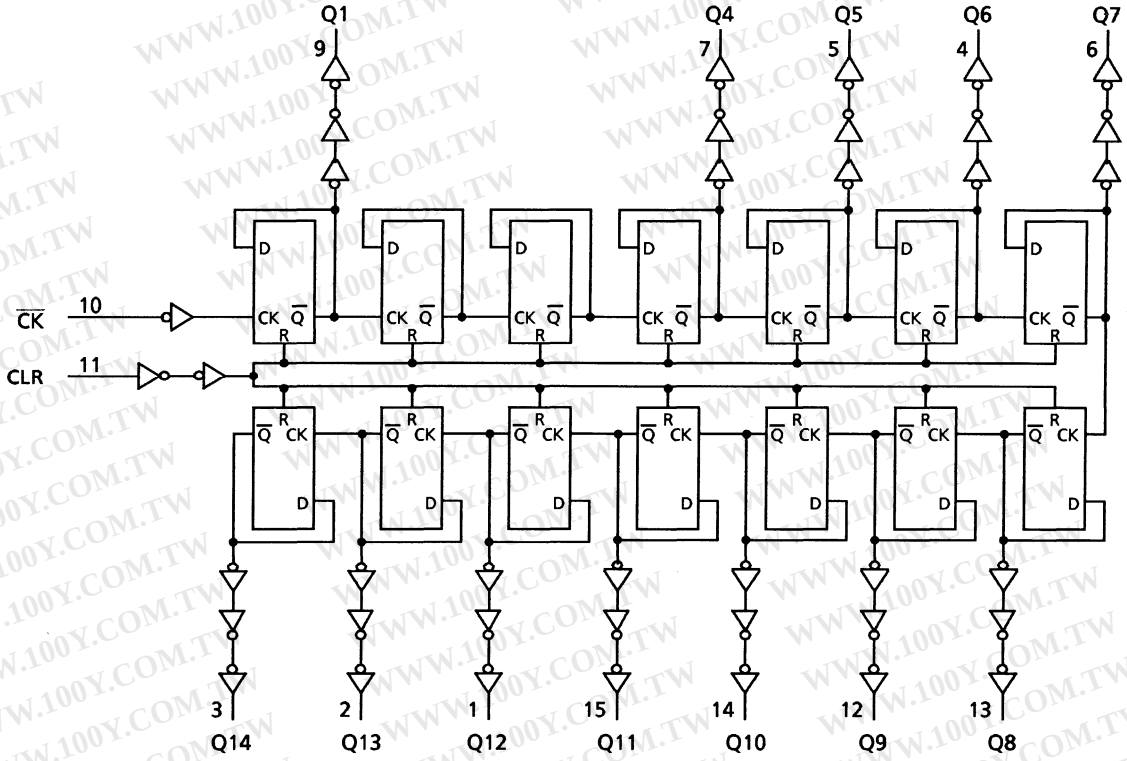

TC74HC4040A

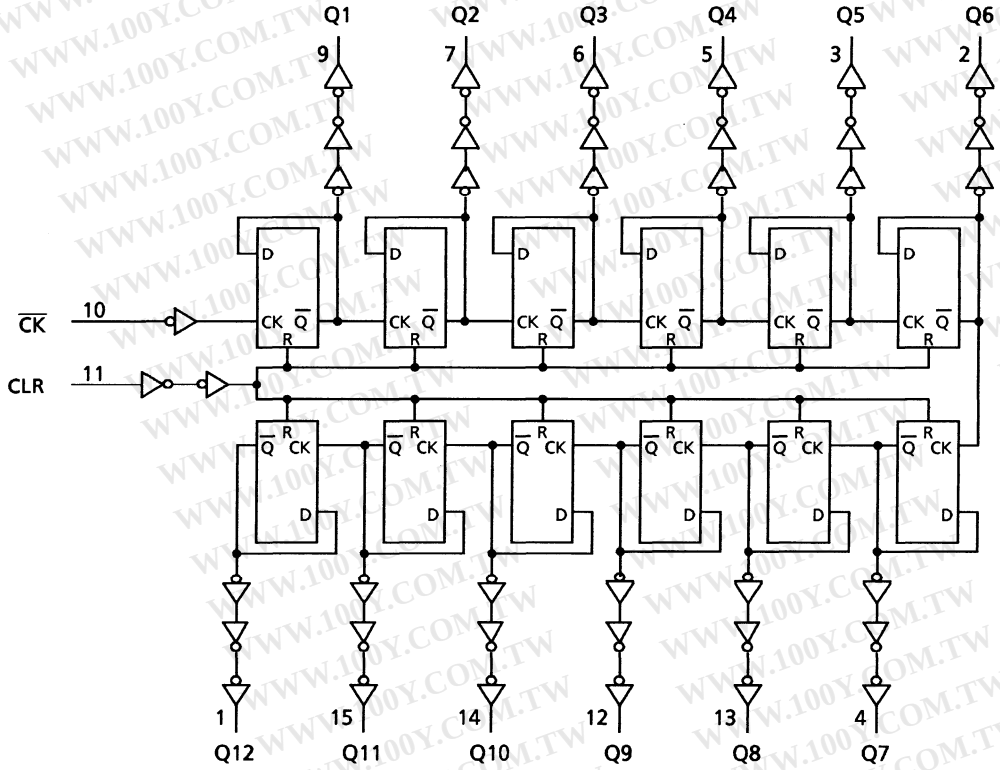

Absolute Maximum Ratings (Note 1)

Characteristics	Symbol	Rating	Unit
Supply voltage range	V_{CC}	−0.5 to 7	V
DC input voltage	V_{IN}	−0.5 to V_{CC} + 0.5	V
DC output voltage	V_{OUT}	−0.5 to V_{CC} + 0.5	V
Input diode current	I_{IK}	±20	mA
Output diode current	I_{OK}	±20	mA
DC output current	I_{OUT}	±25	mA
DC V_{CC}/ground current	I_{CC}	±50	mA
Power dissipation	P_D	500 (DIP) (Note 2)/180 (SOP)	mW
Storage temperature	T_{stg}	−65 to 150	°C

Note 1: Exceeding any of the absolute maximum ratings, even briefly, lead to deterioration in IC performance or even destruction.
Using continuously under heavy loads (e.g. the application of high temperature/current/voltage and the significant change in temperature, etc.) may cause this product to decrease in the reliability significantly even if the operating conditions (i.e. operating temperature/current/voltage, etc.) are within the absolute maximum ratings and the operating ranges.
Please design the appropriate reliability upon reviewing the Toshiba Semiconductor Reliability Handbook ("Handling Precautions"/"Derating Concept and Methods") and individual reliability data (i.e. reliability test report and estimated failure rate, etc).

Note 2: 500 mW in the range of Ta = −40 to 65°C. From Ta = 65 to 85°C a derating factor of −10 mW/°C shall be applied until 300 mW.

Operating Ranges (Note)

Characteristics	Symbol	Rating	Unit
Supply voltage	V_{CC}	2 to 6	V
Input voltage	V_{IN}	0 to V_{CC}	V
Output voltage	V_{OUT}	0 to V_{CC}	V
Operating temperature	T_{opr}	−40 to 85	°C
Input rise and fall time	t_r, t_f	0 to 1000 (V_{CC} = 2.0 V) 0 to 500 (V_{CC} = 4.5 V) 0 to 400 (V_{CC} = 6.0 V)	ns

Note: The operating ranges must be maintained to ensure the normal operation of the device.
Unused inputs must be tied to either V_{CC} or GND.

Electrical Characteristics

DC Characteristics

Characteristics	Symbol	Test Condition		V_{CC} (V)	Ta = 25°C Min	Ta = 25°C Typ.	Ta = 25°C Max	Ta = −40 to 85°C Min	Ta = −40 to 85°C Max	Unit
High-level input voltage	V_{IH}	—		2.0	1.50	—	—	1.50	—	V
				4.5	3.15	—	—	3.15	—	
				6.0	4.20	—	—	4.20	—	
Low-level input voltage	V_{IL}	—		2.0	—	—	0.50	—	0.50	V
				4.5	—	—	1.35	—	1.35	
				6.0	—	—	1.80	—	1.80	
High-level output voltage	V_{OH}	V_{IN} = V_{IH} or V_{IL}	I_{OH} = −20 μA	2.0	1.9	2.0	—	1.9	—	V
				4.5	4.4	4.5	—	4.4	—	
				6.0	5.9	6.0	—	5.9	—	
			I_{OH} = −4 mA	4.5	4.18	4.31	—	4.13	—	
			I_{OH} = −5.2 mA	6.0	5.68	5.80	—	5.63	—	
Low-level output voltage	V_{OL}	V_{IN} = V_{IH} or V_{IL}	I_{OL} = 20 μA	2.0	—	0.0	0.1	—	0.1	V
				4.5	—	0.0	0.1	—	0.1	
				6.0	—	0.0	0.1	—	0.1	
			I_{OL} = 4 mA	4.5	—	0.17	0.26	—	0.33	
			I_{OL} = 5.2 mA	6.0	—	0.18	0.26	—	0.33	
Input leakage current	I_{IN}	V_{IN} = V_{CC} or GND		6.0	—	—	±0.1	—	±1.0	μA
Quiescent supply current	I_{CC}	V_{IN} = V_{CC} or GND		6.0	—	—	4.0	—	40.0	μA

Timing Requirements (input: $t_r = t_f = 6$ ns)

Characteristics	Symbol	Test Condition	V_{CC} (V)	Ta = 25°C Typ.	Ta = 25°C Limit	Ta = −40 to 85°C Limit	Unit
Minimum pulse width ($\overline{CK}$)	$t_{W(L)}$ $t_{W(H)}$	—	2.0	—	75	95	ns
			4.5	—	15	19	
			6.0	—	13	16	
Minimum pulse width (CLR)	$t_{W(H)}$	—	2.0	—	75	95	ns
			4.5	—	15	19	
			6.0	—	13	16	
Minimum removal time	t_{rem}	—	2.0	—	25	30	ns
			4.5	—	5	6	
			6.0	—	5	5	
Clock frequency	f	—	2.0	—	6	5	MHz
			4.5	—	30	24	
			6.0	—	35	28	

AC Characteristics (C_L = 15 pF, V_{CC} = 5 V, Ta = 25°C, input: $t_r = t_f$ = 6 ns)

Characteristics	Symbol	Test Condition	Min	Typ.	Max	Unit
Output transition time	t_{TLH} t_{THL}	—	—	4	8	ns
Propagation delay time ($\overline{CK}$ -Q1)	t_{pLH} t_{pHL}	—	—	16	24	ns
Propagation delay time (Qn-Qn + 1)	Δt_{pd}	—	—	5	14	ns
Propagation delay time (CLR)	t_{pHL}	—	—	14	24	ns
Maximum clock frequency	f_{max}	—	33	73	—	MHz

AC Characteristics (C_L = 50 pF, input: $t_r = t_f$ = 6 ns)

Characteristics	Symbol	Test Condition		Ta = 25°C			Ta = −40 to 85°C		Unit
			V_{CC} (V)	Min	Typ.	Max	Min	Max	
Output transition time	t_{TLH} t_{THL}	—	2.0	—	30	75	—	95	ns
			4.5	—	8	15	—	19	
			6.0	—	7	13	—	16	
Propagation delay time ($\overline{CK}$ -Q1)	t_{pLH} t_{pHL}	—	2.0	—	70	145	—	180	ns
			4.5	—	20	29	—	36	
			6.0	—	17	25	—	31	
Propagation delay time (Qn-Q + 1)	Δt_{pd}	—	2.0	—	20	75	—	95	ns
			4.5	—	6	15	—	19	
			6.0	—	4	13	—	16	
Propagation delay time (CLR)	t_{pHL}	—	2.0	—	55	140	—	175	ns
			4.5	—	17	28	—	35	
			6.0	—	14	24	—	30	
Maximum clock frequency	f_{max}	—	2.0	6	17	—	5	—	MHz
			4.5	30	66	—	24	—	
			6.0	35	78	—	28	—	
Input capacitance	C_{IN}	—		—	5	10	—	10	pF
Power dissipation capacitance	C_{PD} (Note)	TC74HC4020A		—	27	—	—	—	pF
		TC74HC4040A		—	37	—	—	—	

Note: C_{PD} is defined as the value of the internal equivalent capacitance which is calculated from the operating current consumption without load.

Average operating current can be obtained by the equation:

$$I_{CC}\ (opr) = C_{PD} \cdot V_{CC} \cdot f_{IN} + I_{CC}$$

Package Dimensions

DIP16-P-300-2.54A

Unit : mm

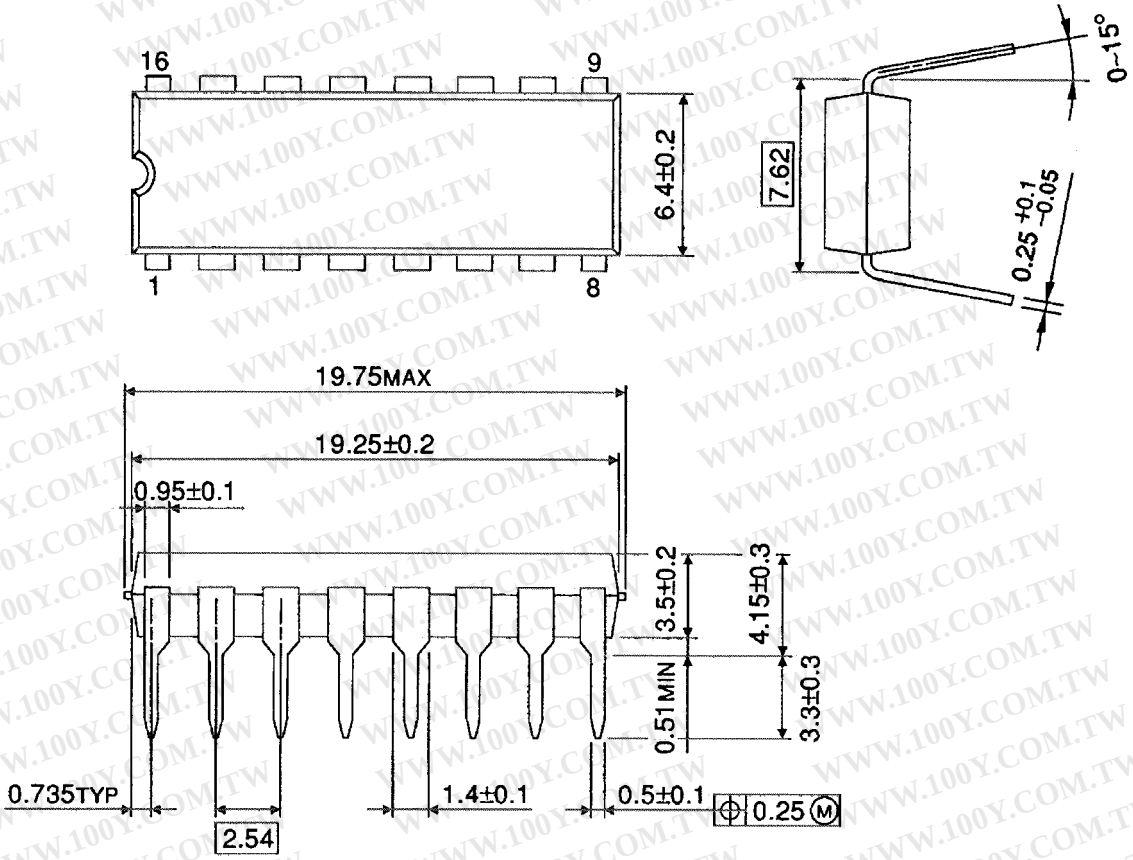

Weight: 1.00 g (typ.)

Package Dimensions

SOP16-P-300-1.27A Unit: mm

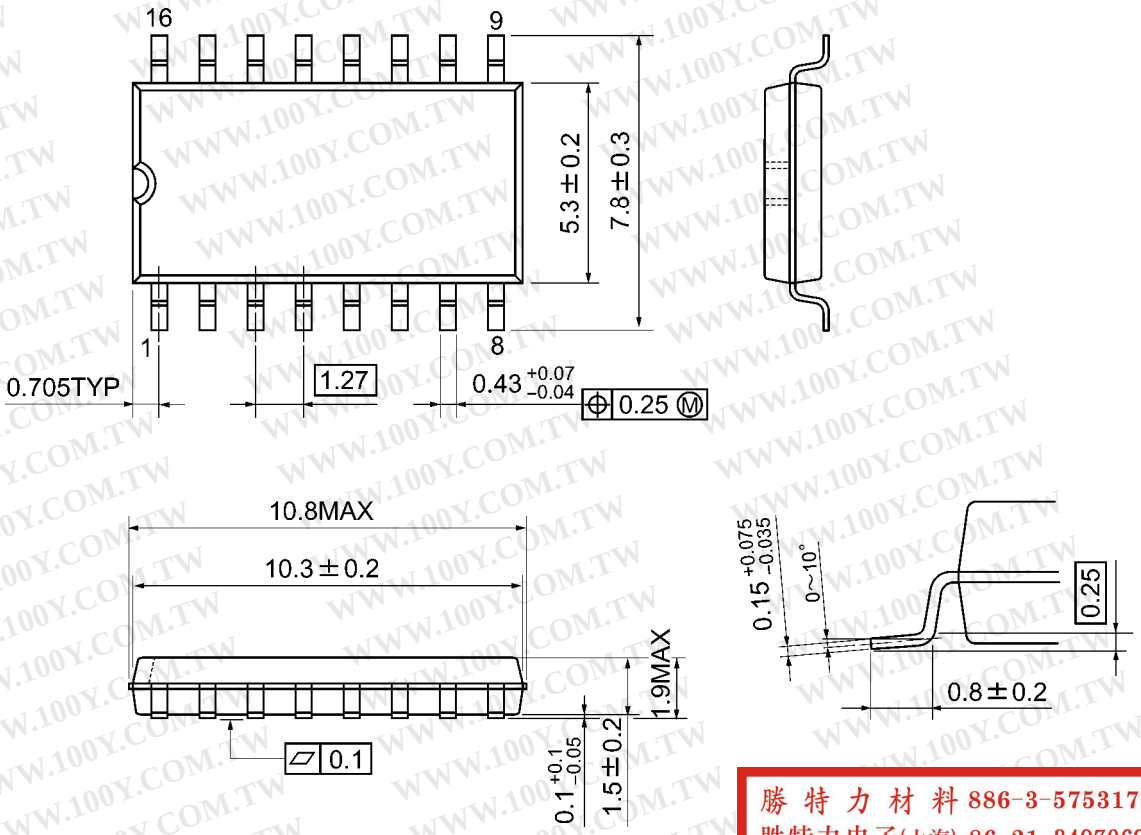

Weight: 0.18 g (typ.)