勝 特 力 材 料 886-3-5753170
胜特力电子(上海) 86-21-34970699
胜特力电子(深圳) 86-755-83298787
Http://www.100y.com.tw

JW1221A

Controller for Adaptive 100/120Hz Current Ripple Removing Circuit

Parameters Subject to Change Without Notice

DESCRIPTION

JW1221A is a controller for driving external NMOSFET to remove the 100/120Hz LED current ripple on AC/DC power by a capacitor between VC and GND.

The adaptive technology of JW1221A ensures minimum power dissipation on NMOSFET while removing LED current ripple.

JW1221A clamps the input voltage on VIN pin by 30V. Only one resistor is needed when the output voltage of AC/DC power is higher than the VIN clamp threshold.

JW1221A allows user to setup maximum LED current by the sensing resistor between the source of NMOSFET and ground, which protects NMOSFET from being damaged when LED short connected or hot-plug.

By sensing the drain voltage of NMOSFET via a resistor between the drain and VLMT pin, JW1221A allows user to setup the maximum cathode voltage of LED string, which could help limit the power dissipation on chip.

It is considered that LED is shorted when the cathode voltage of LED is higher than short connecting threshold and remains over 60us.

JW1221A shuts down NMOSFET when LED is shorted and recovers after 800ms.

JW1221A provides over thermal protection. When the temperature of JW1221A exceed 145℃, OTP is trigged. JW1221A releases the current ripple until the temperature decrease to 120℃.

Company's Logo is Protected, "JW" and "JOULWATT" are Registered Trademarks of JoulWatt technology Inc.

FEATURES

- Controller for adaptive 100/120Hz current ripple remover
- Built-in zener diode for input voltage clamping
- VG output voltage high to 10V
- Programmable amplitude of LED current ripple
- Programmable maximum cathode voltage of LED
- Programmable maximum LED current
- Short protection
- Over temperature protection
- SOT23-6 Package

APPLICATIONS

- LED lighting

TYPICAL APPLICATION

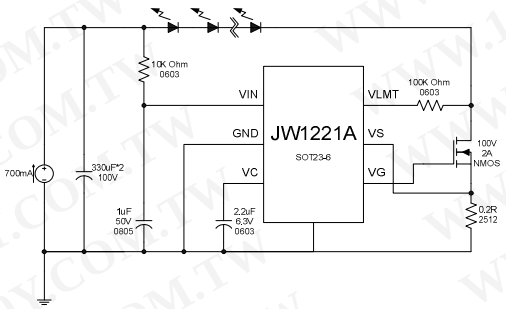

JoulWatt Proprietary Information. Patent Protected.
Unauthorized Photocopy and Duplication Prohibited.

ORDER INFORMATION

LEAD FREE FINISH	TAPE AND REEL	PACKAGE	TOP MARKING
JW1221ASOTB#PBF	JW1221ASOTB#TRPBF	SOT23-6	JWC7

Note：

JWXXXXPPPP#TRPBF
- Part Number
- Package Code
- Pb Free
- Tape and Reel（If "TR" is not shown, it means Tube）

PIN CONFIGURATION

TOP VIEW

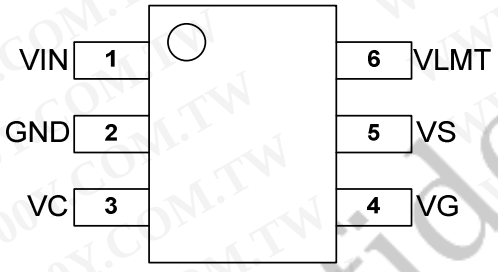

SOT23-6

ABSOLUTE MAXIMUM RATING[1)]

VIN clamp voltage 31V
VG 20V
VS, VC, VLMT ..... -0.3V to 6V
Junction Temperature[2)3)] 150ºC
Lead Temperature 260ºC
Storage Temperature ..... -65ºC to +150ºC

RECOMMENDED OPERATING CONDITIONS

Junction Temperature (T_J) ..... -40ºC to 125ºC

THERMAL PERFORMANCE[4)]

	θ_{JA}	θ_{Jc}
SOT23-6	220	130ºC/W

Note：

1) Exceeding these ratings may damage the device.
2) The JW1221A guarantees robust performance from -40°C to 150°C junction temperature. The junction temperature range specification is assured by design, characterization and correlation with statistical process controls.
3) The JW1221A includes thermal protection that is intended to protect the device in overload conditions. Thermal protection is active when junction temperature exceeds the maximum operating junction temperature. Continuous operation over the specified absolute maximum operating junction temperature may damage the device.
4) Measured on JESD51-7, 4-layer PCB.

JoulWatt Confidential

Unauthorized Photocopy and Duplication Prohibited.

ELECTRICAL CHARACTERISTICS

VIN = 12V, TA = 25ºC, unless otherwise stated.

Item	Symbol	Condition	Min.	Typ.	Max.	Units
VIN clamp voltage	V_{IN_CLP}		29	32	35	V
VIN operation current	I_{IN}	17V<VIN<27V	0.24	0.3	0.58	mA
VIN startup voltage threshold	V_{IN_ST}		15	16.5	18	V
VIN UVLO threshold	V_{IN_UVLO}			11.5		V
Maximum VG output voltage	V_{VG}		9	10.5	12	V
VC startup current	I_{VCST}	VC short to GND when startup	0.45	0.65	0.85	mA
VLMT reference voltage	V_{VLMTR}		1.85	2.05	2.25	V
NMOSFET drain voltage limit	V_{D_CLP}	Drain voltage of NMOSFET when voltage limit is trigged. R_{LIMIT}=100K.	3.7	4.4	5.1	V
SHORT protection threshold	V_{TH_SHORT}	Drain voltage of NMOSFET when SHORT is trigged. R_{LIMIT}=100K.	5	6	7.5	V
SHORT protection delay time[5)]	TSPD			160		us
SHORT protection hold time[5)]	TSPH			800		ms
VS voltage limit	V_{VS}		0.220		0.255	V

5) Guaranteed by design

JoulWatt Confidential

JoulWatt Proprietary Information. Patent Protected.
Unauthorized Photocopy and Duplication Prohibited.

PIN DESCRIPTION

SOT23-6 Pin No.	Name	Description
1	VIN	Power Supply
2	GND	Ground
3	VC	LED Current Ripple Programming
4	VG	NMOSFET GATE driving voltage output
5	VS	LED current sensing input
6	VLMT	LED Voltage Limit and SHORT protection Programming

BLOCK DIAGRAM

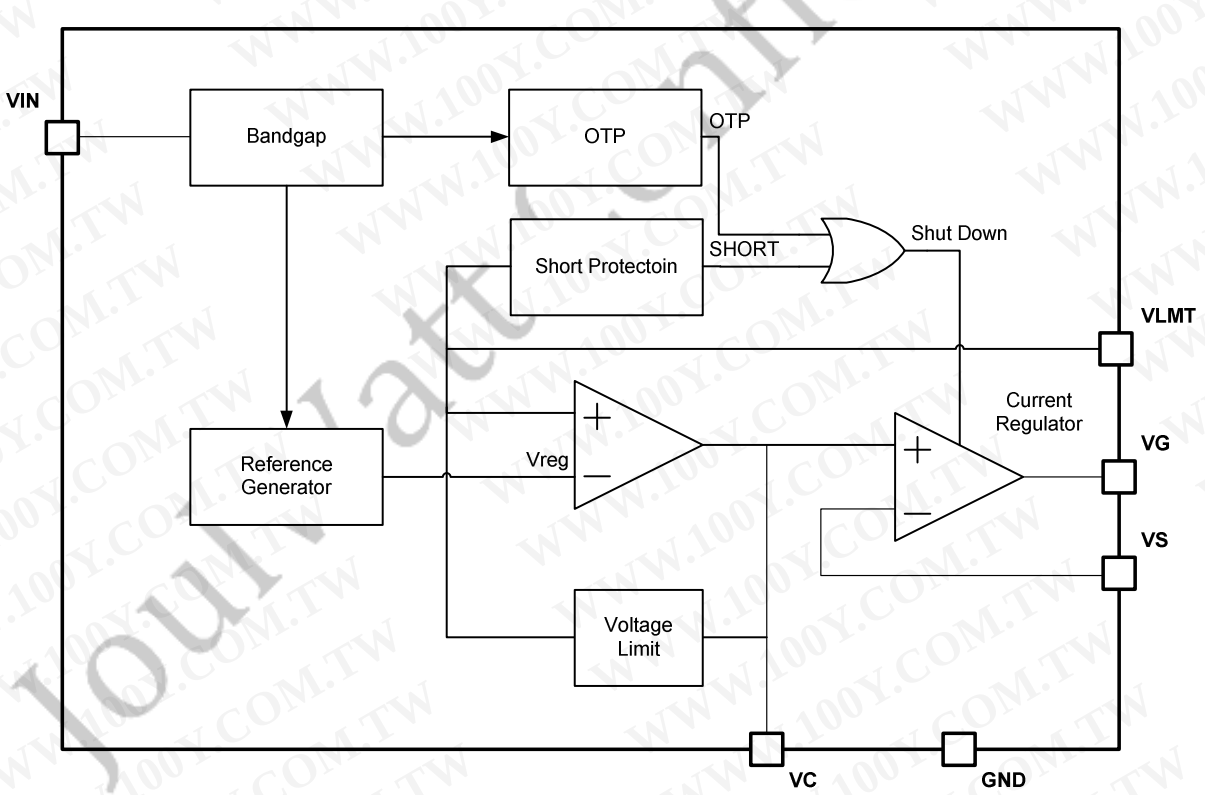

JoulWatt Proprietary Information. Patent Protected.
Unauthorized Photocopy and Duplication Prohibited.

TYPICAL PERFORMANCE CHARACTERISTICS

V_{IN}= 90~264V_{AC}, V_{OUT}=75V, I_{OUT}=240mA, COUT= 100μF/100V*2, TA = +25°C, unless otherwise noted

Pre-driver Output Steady State

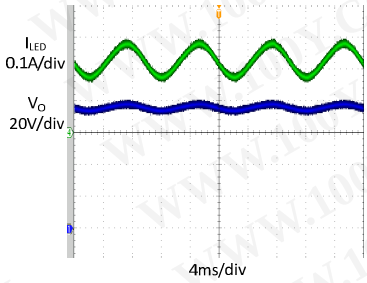

+JW1221A Output Steady State

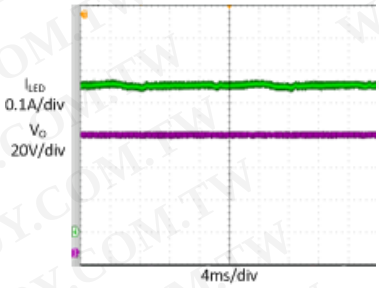

Efficiency comparison(with and without JW1221A)

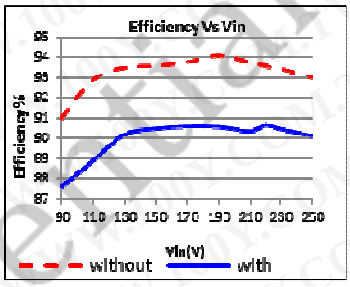

Open Circuit protection Test

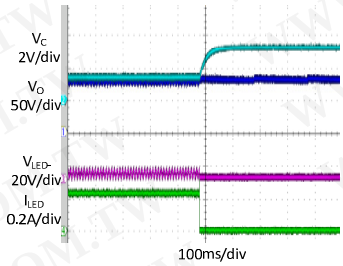

Short Circuit Protection Test

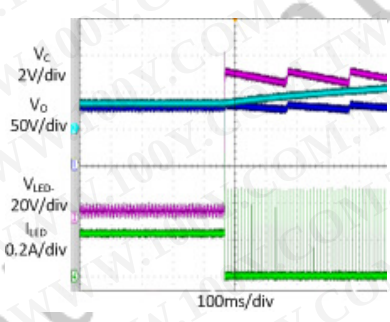

Continuous power on/off test

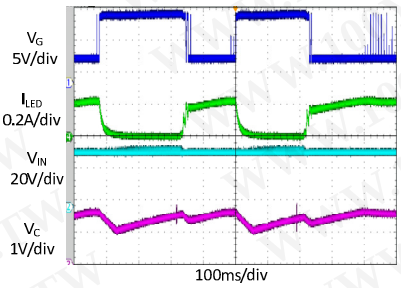

LED Hot plug

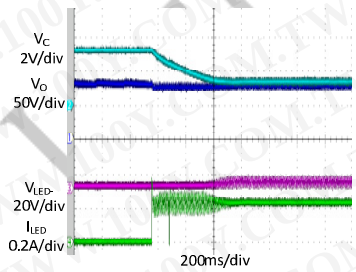

VIN Current VS Temperature

ILED=700mA, RS=0.20 Ohm

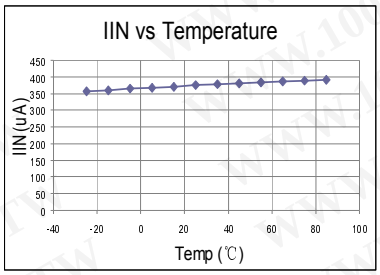

Regulated LED pin Voltage VS Temperature

ILED=700mA, RS=0.20 Ohm

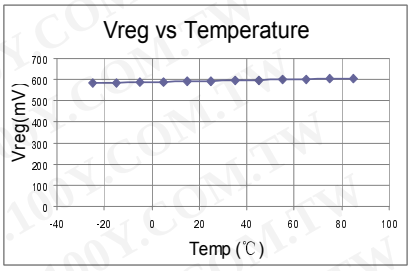

JoulWatt Proprietary Information. Patent Protected.
Unauthorized Photocopy and Duplication Prohibited.

FUNCTIONAL DESCRIPTION

JW1221A is a controller for driving external NMOSFET to remove the 100/120Hz LED current ripple on AC/DC power.

Theory of Operation

The LED string and JW1221A are both supplied by an AC/DC current source. The drain of external NMOSFET is connected to the cathode of LED string. A sensing resistor R_{SENSE} is connected between the source of NMOSFET and GND. The gate is connected to the VG of JW1221A.

JW1221A drives NMOSFET to transfer the LED current ripple to voltage ripple on NMOSFET, and ensures the constant voltage across LED string and the current flow through LED string.

The scalable adaptive function of JW1221A can regulate the cathode voltage of LED string to minimum to improve the efficiency of the system.

Current Ripple Removing

The capacitor C_C between VC and GND is an integration capacitor. JW1221A transform the voltage on C_C to a reference voltage. The current regulator regulates the voltage on R_{SENSE} equal to the reference voltage.

The relationship between the voltage on C_C and R_S is shown as following:

$$V_{RS} = I_{LED} * R_{SENSE} = V_{VC} / 10$$

C_C should be large enough in order to remove the current ripple of the LED string. However, too large capacitor may slow down the dynamic response.

Adaptive Regulation

JW1221A control the voltage on C_C by monitoring the operation state of external NMOSFET. The efficiency of system is relatively low when NMOSFET is working in the saturation region. JW1221A detects it and charges C_C to raise the V_{VC} and I_{LED}, then the output voltage of power supply is reduced, and the voltage drop on NMOSFET decreases.

Conversely, when NMOSFET is working in the linear region, LED current regulation loop is open. JW1221A detects it and discharges C_C to reduce the V_{VC} and I_{LED}, then the output voltage of power supply is raised, and the LED current regulation loop is close.

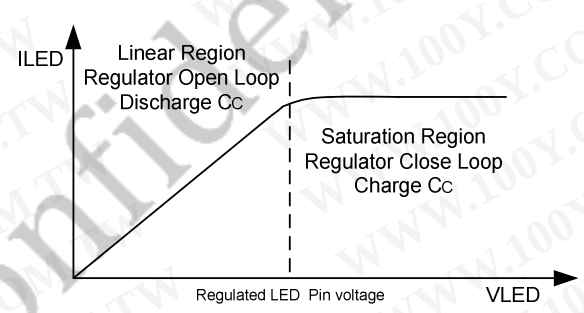

Drain Voltage of NMOSFET Limit

The voltage ripple on the drain of NMOSFET maybe very large when the current ripple is removed, which would bring large power dissipation on chip. The resistor between the drain of NMOSFET and VLMT pin can setup the limit value of drain voltage of NMOSFET.

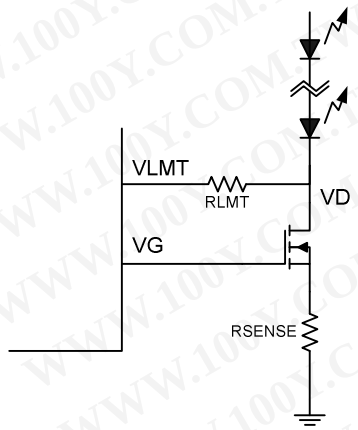

JoulWatt Proprietary Information. Patent Protected.
Unauthorized Photocopy and Duplication Prohibited.

The limit threshold is calculated as below:

$$V_{limit} = 2V + R_{LMT} * 20uA$$

LED Current Limit

The voltage of VS pin is limited to 0.23V internally. So the current limitation is $0.23V/R_S$.

Current limit can protect the chip when LED is short connected or HOT-PLUG.

The function of current limit is higher priority than drain voltage limit. It means that the voltage on drain of NMOSFET is not limited when LED current exceed current limit threshold.

LED Short Protection

JW1221A detect SHORT by R_{LMT}. When the drain voltage of NMOSFET exceeds the SHORT PROTECTION THRESHOLD and the state holds for more than 160us, JW1221A considers the LED string is SHORT connected, and shut down the external MOSFET. The SHORT state is reset after 800ms.
The SHORT PROTECTION THRESHOLD is calculated as:

$$V_{THSCP} = 2V + R_{LMT} * 40uA$$

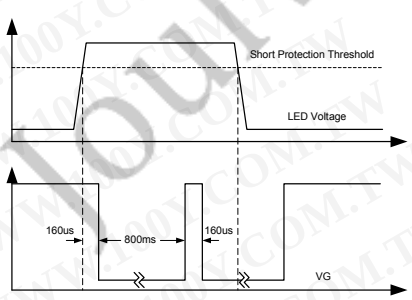

Over Thermal Protection

JW1221A monitors operation temperature. When the temperature is higher than 145℃, JW1221A releases the current ripple until the temperature decrease to 120℃.

PCB Design Guideline

1. The bypass capacitor of VIN should be placed as close as possible to the VIN pin and GND pin of IC.
2. JW1221A should be placed far away from the power devices such as MOSFET and SBD.
3. The area of LED current loop should be as small as possible.

MOSFET Selection Recommendation

1. PDD0910, N-Channel MOSFET 100V, 8A, 200mohm, TO252, Potens.
2. FDS86240, N-Channel MOSFET 150V 7.5A 19.8mohm, SO-8, FAIRCHILD.
3. FQD18N20V2, N-Channel MOSFET 200V, 18A, 140mohm, TO252, FAIRCHILD.
4. CS630A8H, N-Channel MOSFET 200V, 9A, 0.23ohm, TO-220AB, Huajing.
5. CS640A8H, N-Channel MOSFET 200V, 18A, 0.12ohm, TO-220AB, Huajing.

JoulWatt Confidential

Unauthorized Photocopy and Duplication Prohibited.

APPLICATION INFORMATION

JW1221A design guide:

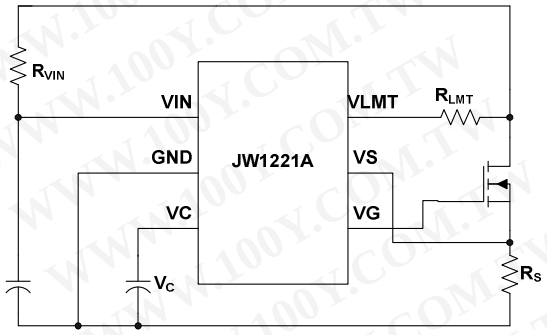

1. Because of the 30V zener integrated and the 16V V_{IN} start threshold, the value of R_{VIN} may satisfy the following conditions:

$$R_{VIN} < \frac{V_F - 16V}{0.5mA}$$

V_F: the voltage of LED

2. The maximum voltage of VS pin is 0.2V in order to limit the maximum output current especially in the short circuit condition. The value of R_S can be calculated as below:

$$R_S < \frac{0.2V}{I_{LED}}$$

I_{LED}: the output current of the pre-driver

3. When the voltage of LED- reaches V_{SCP} which is set by the R_{LMT}, JW1221A pulls down the VIN then turns off the MOSFET. In order to ensure nothing will be damaged in the short circuit condition, the value of R_{LMT} must satisfy the following conditions:

$$V_{OVP} - V_F < V_{SCP} < V_F$$

$$V_{SCP} < V_{INSTART} = R_{VIN} * 0.5mA + 16V$$

$$V_{SCP} = 2V + 40uA * R_{LMT}$$

V_{OVP}: the output voltage when the pre-driver is open.

V_{SCP}: the threshold of JW1221A short circuit protection.

$V_{INSTART}$: the output voltage of the pre-driver when the VIN of JW1221A is 16V.

4. The value of the capacitor between VC and GND can determine the final amplitude of the current ripple. It should be large enough in order to remove the current ripple of the LED string. However, too large capacitor may slow down the dynamic response. In normal condition, 1uF or 2.2uF is relatively reasonable.
5. To ensure JW1221A work properly, the R_{DSON} of MOSFET must be less than $3R_S$. The MOSFET will endure a large power shorting the output on the moment, so the appropriate package and R_{DSON} of the MOSFET is necessary.
6. When short the LED, there is an overshoot on the drain of the MOSFET. The breakdown voltage of the MOSFET must be higher than V_{OVP}. A diode connected to LED+&LED- can reduce the overshoot when short.

JoulWatt Confidential

Unauthorized Photocopy and Duplication Prohibited.

REFERENCE DESIGN

Reference:

V_{IN}: 90~260VAC

V_{OUT}: 75V

I_{OUT}: 240mA

PF: >0.9

Current ripple:<5%

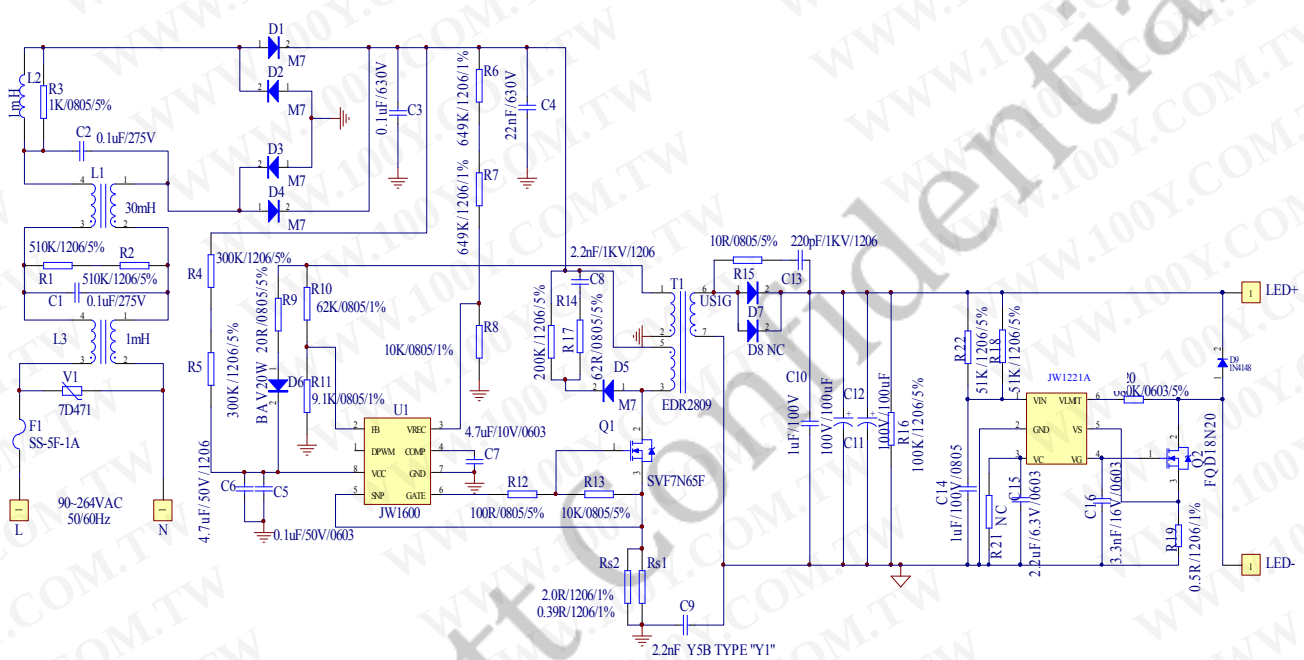

勝 特 力 材 料 886-3-5753170
胜特力电子(上海) 86-21-34970699
胜特力电子(深圳) 86-755-83298787
Http://www.100y.com.tw

JoulWatt Confidential

PACKAGE OUTLINE

SOT23-6 Unit: mm

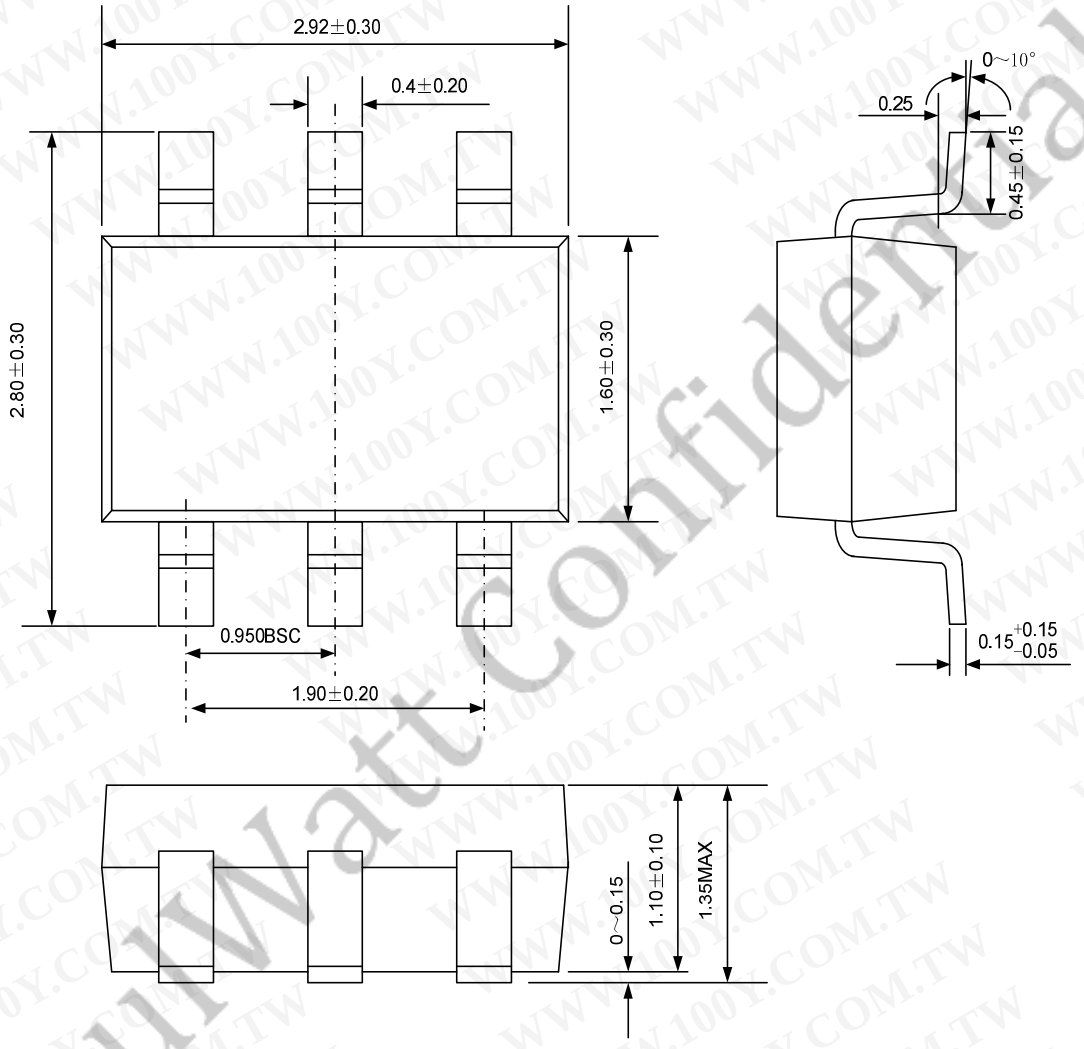

JoulWatt Confidential

JoulWatt Proprietary Information. Patent Protected.
Unauthorized Photocopy and Duplication Prohibited.

IMPORTANT NOTICE

- **Joulwatt Technology Inc. reserves the right to make modifications, enhancements, improvements, corrections or other changes without further notice to this document and any product described herein.**
- **Any unauthorized redistribution or copy of this document for any purpose is strictly forbidden.**
- **Joulwatt Technology Inc. does not warrant or accept any liability whatsoever in respect of any products purchased through unauthorized sales channel.**

JoulWatt Confidential

Copyright © 2016 JW1221A Incorporated.

All rights are reserved by Joulwatt Technology Inc.