勝 特 力 材 料 886-3-5753170
胜特力电子(上海) 86-21-34970699
胜特力电子(深圳) 86-755-83298787
Http://www.100y.com.tw

High-or Low-Side Measurement, Bi-Directional CURRENT/POWER MONITOR with I²C™ Interface

Check for Samples: INA226

FEATURES

- **SENSES BUS VOLTAGES FROM 0V TO +36V**
- **HIGH- OR LOW-SIDE SENSING**
- **REPORTS CURRENT, VOLTAGE, AND POWER**
- **HIGH ACCURACY:**
  - **0.1% Gain Error (Max)**
  - **10µV Offset (Max)**
- **CONFIGURABLE AVERAGING OPTIONS**
- **16 PROGRAMMABLE ADDRESSES**
- **OPERATES FROM 2.7 to 5.5V POWER SUPPLY**
- **MSOP-10 PACKAGE**

APPLICATIONS

- **SERVERS**
- **TELECOM EQUIPMENT**
- **COMPUTERS**
- **POWER MANAGEMENT**
- **BATTERY CHARGERS**
- **POWER SUPPLIES**
- **TEST EQUIPMENT**

DESCRIPTION

The INA226 is a current shunt and power monitor with an I²C interface. The INA226 monitors both a shunt voltage drop and bus supply voltage. Programmable calibration value, conversion times, and averaging, combined with an internal multiplier, enable direct readouts of current in amperes and power in watts.

The INA226 senses current on buses that can vary from 0V to +36V, while the device obtains its power from a single +2.7V to +5.5V supply, drawing a typical of 330µA of supply current. The INA226 is specified over the operating temperature range of –40°C to +125°C. The I²C interface features 16 programmable addresses.

RELATED PRODUCTS

DESCRIPTION	DEVICE
Current/Power Monitor with Watchdog, Peak-Hold, and Fast Comparator Functions	INA209
Zerø-Drift, Low-Cost, Analog Current Shunt Monitor Series in Small Package	INA210, INA211, INA212, INA213, INA214
Zerø-Drift, Bi-Directional Current Power Monitor with Two-Wire Interface	INA219
High or Low Side, Bi-Directional Current/Power Monitor with Two-Wire Interface	INA220

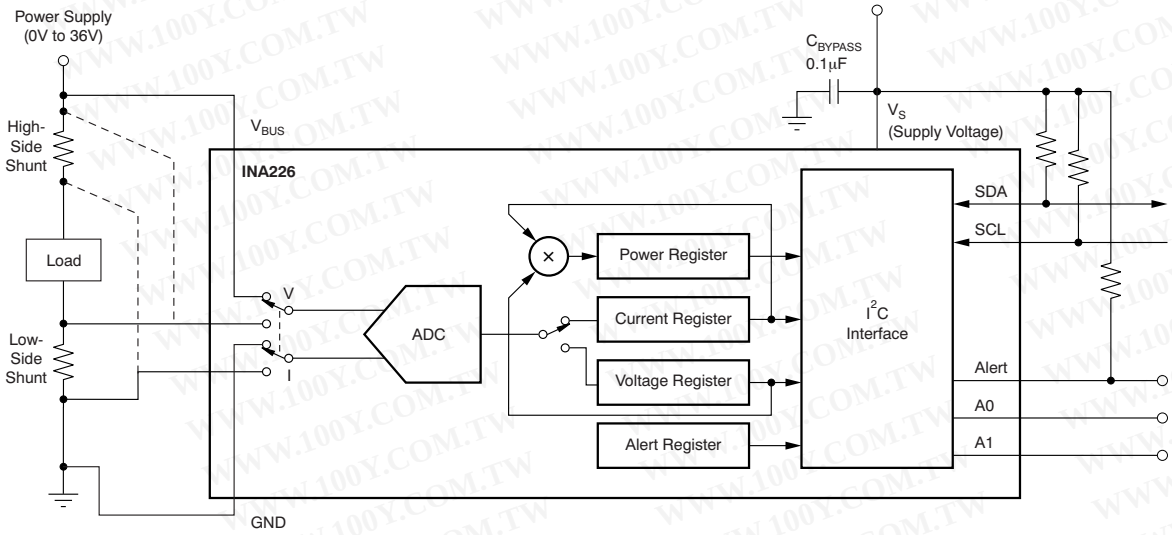

High-or Low-Side Sensing

Please be aware that an important notice concerning availability, standard warranty, and use in critical applications of Texas Instruments semiconductor products and disclaimers thereto appears at the end of this data sheet.

I²C is a trademark of NXP Semiconductors.
All other trademarks are the property of their respective owners.

PRODUCTION DATA information is current as of publication date. Products conform to specifications per the terms of the Texas Instruments standard warranty. Production processing does not necessarily include testing of all parameters.

Copyright © 2011, Texas Instruments Incorporated

This integrated circuit can be damaged by ESD. Texas Instruments recommends that all integrated circuits be handled with appropriate precautions. Failure to observe proper handling and installation procedures can cause damage.

ESD damage can range from subtle performance degradation to complete device failure. Precision integrated circuits may be more susceptible to damage because very small parametric changes could cause the device not to meet its published specifications.

PACKAGING INFORMATION(1)

PRODUCT	PACKAGE-LEAD	PACKAGE DESIGNATOR	PACKAGE MARKING
INA226AIDGS	MSOP-10	DGS	226

(1) For the most current package and ordering information see the Package Option Addendum at the end of this document, or see the INA226 product folder at www.ti.com.

ABSOLUTE MAXIMUM RATINGS(1)

Over operating free-air temperature range (unless otherwise noted).

		INA226	UNIT
Supply Voltage, V_S		6	V
Analog Inputs, VIN+, VIN–	Differential (VIN+) – (VIN–)(2)	–40 to +40	V
	Common-Mode	–0.3 to +40	V
SDA		GND – 0.3 to +6	V
SCL		GND – 0.3 to V_S + 0.3	V
Input Current Into Any Pin		5	mA
Open-Drain Digital Output Current		10	mA
Storage Temperature		–65 to +150	°C
Junction Temperature		+150	°C
ESD Ratings	Human Body Model (HBM)	2500	V
	Charged-Device Model (CDM)	1000	V
	Machine Model (MM)	150	V

(1) Stresses above these ratings may cause permanent damage. Exposure to absolute maximum conditions for extended periods may degrade device reliability. These are stress ratings only, and functional operation of the device at these or any other conditions beyond those specified is not implied.
(2) VIN+ and VIN– may have a differential voltage of –40V to +40V; however, the voltage at these pins must not exceed the range –0.3V to +40V.

Copyright © 2011, Texas Instruments Incorporated

ELECTRICAL CHARACTERISTICS: V_S = +3.3V

Boldface limits apply over the specified temperature range, **T_A = –40°C to +125°C.**
At T_A = +25°C, VIN+ = 12V, V_{SENSE} = (VIN+ – VIN–) = 0mV, V_{BUS} = 12V, unless otherwise noted.

PARAMETER		CONDITIONS	INA226 MIN	INA226 TYP	INA226 MAX	UNIT
INPUT						
Shunt voltage input range			-81.9175		81.92	mV
Bus voltage input range(1)			0		36	V
Common-mode rejection	CMRR	V_{IN}+ = 0V to +36V	126	140		dB
Shunt offset voltage, RTI(2)	V_{OS}			±2.5	±10	µV
vs Temperature				**0.02**	**0.1**	**µV/°C**
vs Power supply	PSRR	V_S = +2.7V to +5.5V		2.5		µV/V
Bus offset voltage, RTI(2)	V_{OS}			±1.25	±7.5	mV
vs Temperature				**10**	**40**	**µV/°C**
vs Power supply	PSRR			0.5		mV/V
Input bias current	I_{IN+}, I_{IN-}			10		µA
V_{BUS} input impedance				830		kΩ
Input leakage(3)		(VIN+ Pin) + (VIN– Pin), Power-down mode		0.1	0.5	µA
DC ACCURACY						
ADC native resolution				16		Bits
1 LSB step size		Shunt voltage		2.5		µV
		Bus voltage		1.25		mV
Shunt voltage gain error				0.02	0.1	%
vs Temperature				**10**	**50**	**ppm/°C**
Bus voltage gain error				0.02	0.1	%
vs Temperature				**10**	**50**	**ppm/°C**
Differential nonlinearity				±0.1		LSB
ADC conversion time		CT bit = 000		140	154	µs
		CT bit = 001		204	224	µs
		CT bit = 010		332	365	µs
		CT bit = 011		588	646	µs
		CT bit = 100		1.1	1.21	ms
		CT bit = 101		2.116	2.328	ms
		CT bit = 110		4.156	4.572	ms
		CT bit = 111		8.244	9.068	ms
SMBus						
SMBus timeout(4)				28	35	ms
DIGITAL INPUT/OUTPUT						
Input capacitance				3		pF
Leakage input current		$0 \le V_{IN} \le V_S$		0.1	1	µA
Input logic levels:						
V_{IH}			0.7(V_S)		6	V
V_{IL}			–0.5		0.3(V_S)	V
Output logic level						
V_{OL} SDA, alert		I_{OL} = 3mA	0		0.4	V
Hysteresis				500		mV

(1) While the input range is 36V, the full-scale range of the ADC scaling is 40.96V. See the *Basic ADC Functions* section. Do not apply more than 36V.
(2) RTI = Referred-to-input.
(3) Input leakage is positive (current flowing into the pin) for the conditions shown at the top of this table. Negative leakage currents can occur under different input conditions.
(4) SMBus timeout in the INA226 resets the interface any time SCL is low for more than 28ms.

Copyright © 2011, Texas Instruments Incorporated

ELECTRICAL CHARACTERISTICS: V_S = +3.3V (continued)

Boldface limits apply over the specified temperature range, **T_A = –40°C to +125°C.**
At T_A = +25°C, VIN+ = 12V, V_{SENSE} = (VIN+ – VIN–) = 0mV, V_{BUS} = 12V, unless otherwise noted.

PARAMETER	CONDITIONS	INA226			UNIT
		MIN	TYP	MAX	
POWER SUPPLY					
Operating supply range		+2.7		+5.5	V
Quiescent current			330	420	µA
Quiescent current, power-down mode			0.5	2	µA
Power-on reset threshold			2		V
TEMPERATURE RANGE					
Specified range		–40		+125	°C

THERMAL INFORMATION

THERMAL METRIC[(1)]		INA226 DGS 10 PINS	UNITS
θ_{JA}	Junction-to-ambient thermal resistance	171.4	°C/W
θ_{JCtop}	Junction-to-case (top) thermal resistance	42.9	
θ_{JB}	Junction-to-board thermal resistance	91.8	
ψ_{JT}	Junction-to-top characterization parameter	1.5	
ψ_{JB}	Junction-to-board characterization parameter	90.2	
θ_{JCbot}	Junction-to-case (bottom) thermal resistance	n/a	

(1) For more information about traditional and new thermal metrics, see the *IC Package Thermal Metrics* application report, SPRA953.

Copyright © 2011, Texas Instruments Incorporated

PIN CONFIGURATIONS

DGS PACKAGE
MSOP-10
(Top View)

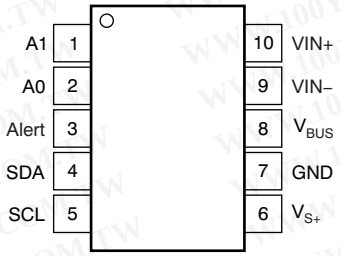

PIN DESCRIPTIONS

MSOP-10 (DGS)		DESCRIPTION
PIN NO	NAME	
1	A1	Address pin. Connect to GND, SCL, SDA, or V_S. Table 7 shows pin settings and corresponding addresses.
2	A0	Address pin. Connect to GND, SCL, SDA, or V_S. Table 7 shows pin settings and corresponding addresses.
3	Alert	Multi-functional alert, open-drain output.
4	SDA	Serial bus data line, open-drain input/output.
5	SCL	Serial bus clock line, open-drain input.
6	V_{S+}	Power supply, 2.7V to 5.5V.
7	GND	Ground.
8	V_{BUS}	Bus voltage input.
9	VIN–	Negative differential shunt voltage. Connect to negative side of shunt resistor.
10	VIN+	Positive differential shunt voltage. Connect to positive side of shunt resistor.

REGISTER BLOCK DIAGRAM

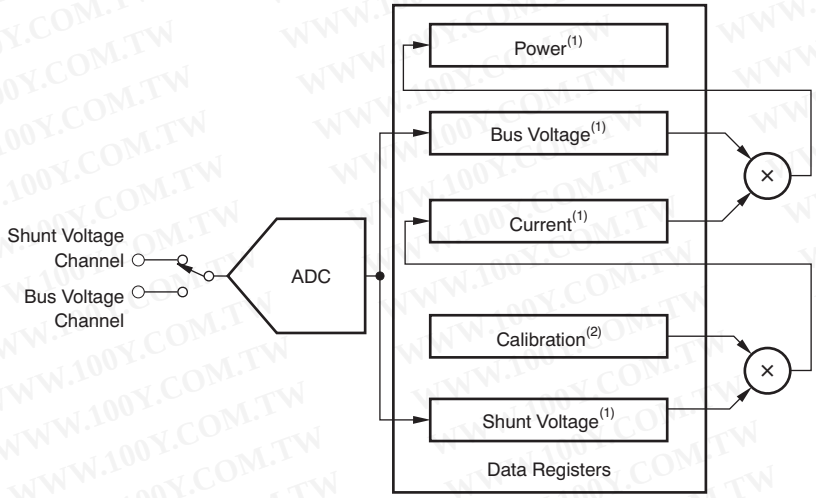

(1) Read-only
(2) Read/write

Figure 1. INA226 Register Block Diagram

TYPICAL CHARACTERISTICS

At T_A = +25°C, V_S = +3.3V, VIN+ = 12V, V_{SENSE} = (VIN+ – VIN–) = 0mV, V_{BUS} = 12V, unless otherwise noted.

FREQUENCY RESPONSE

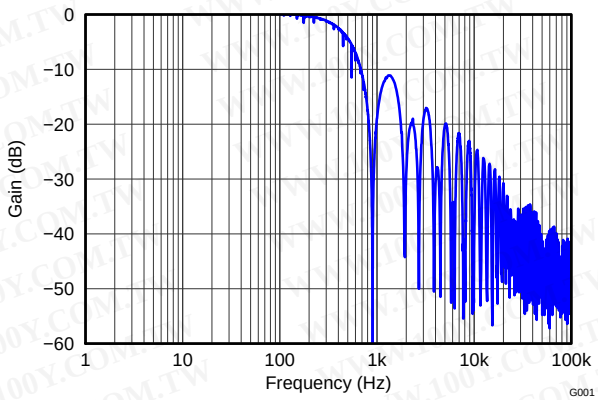

Figure 2.

SHUNT INPUT OFFSET VOLTAGE PRODUCTION DISTRIBUTION

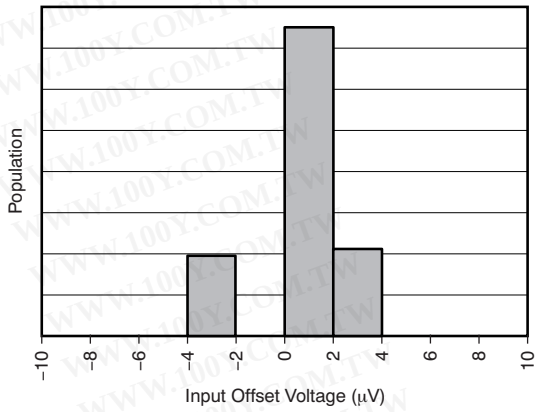

Figure 3.

SHUNT INPUT OFFSET VOLTAGE vs TEMPERATURE

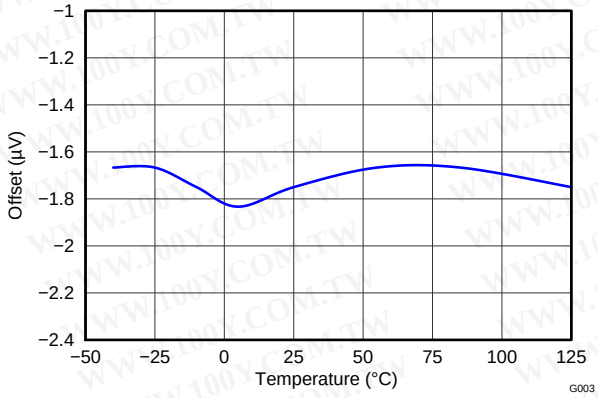

Figure 4.

SHUNT INPUT COMMON-MODE REJECTION RATIO vs TEMPERATURE

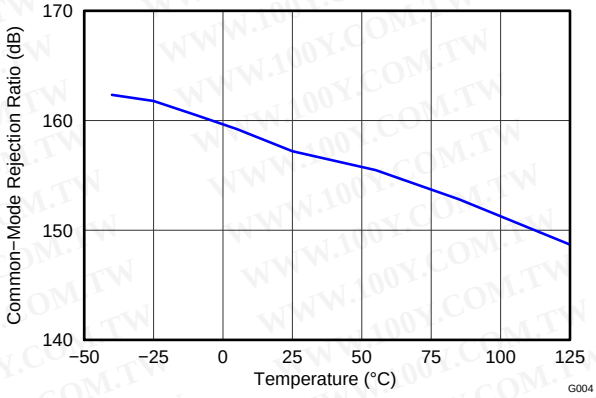

Figure 5.

SHUNT INPUT GAIN ERROR PRODUCTION DISTRIBUTION

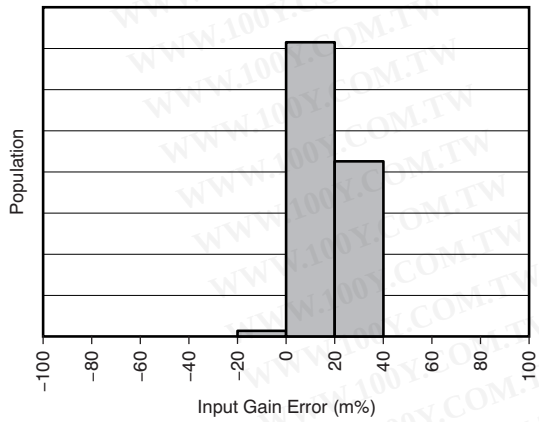

Figure 6.

SHUNT INPUT GAIN ERROR vs TEMPERATURE

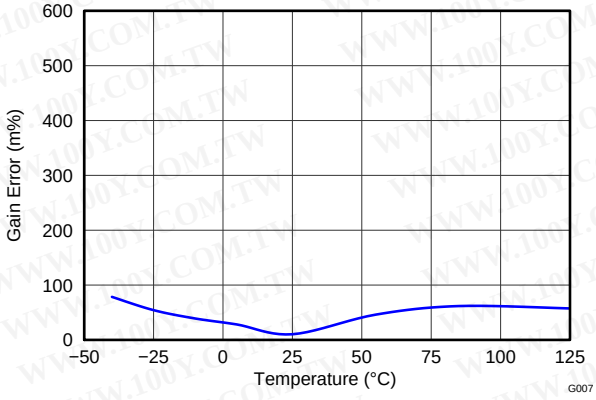

Figure 7.

Copyright © 2011, Texas Instruments Incorporated

TYPICAL CHARACTERISTICS (continued)

At T_A = +25°C, V_S = +3.3V, VIN+ = 12V, V_{SENSE} = (VIN+ – VIN–) = 0mV, V_{BUS} = 12V, unless otherwise noted.

SHUNT INPUT GAIN ERROR vs COMMON-MODE VOLTAGE

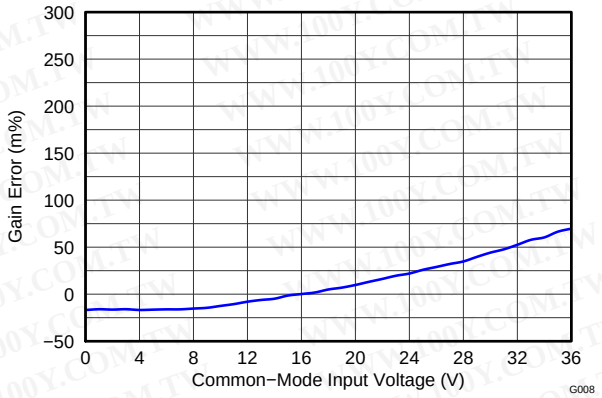

Figure 8.

BUS INPUT OFFSET VOLTAGE PRODUCTION DISTRIBUTION

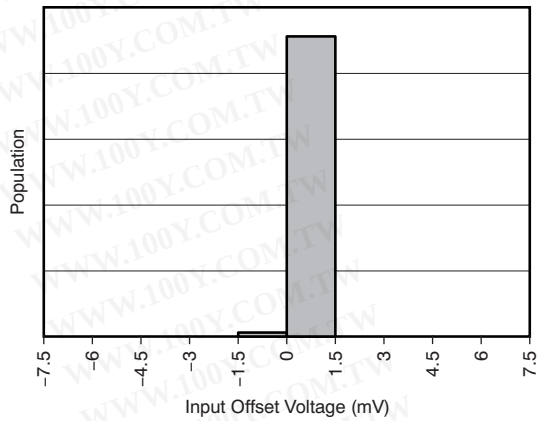

Figure 9.

BUS INPUT OFFSET VOLTAGE vs TEMPERATURE

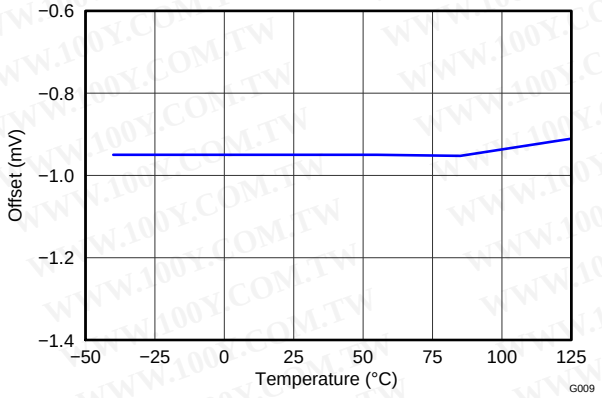

Figure 10.

BUS INPUT GAIN ERROR PRODUCTION DISTRIBUTION

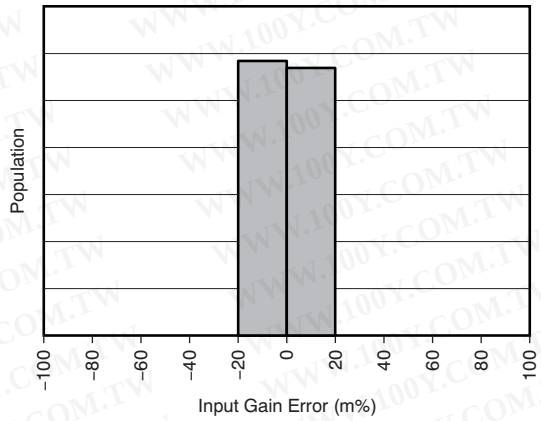

Figure 11.

BUS INPUT GAIN ERROR vs TEMPERATURE

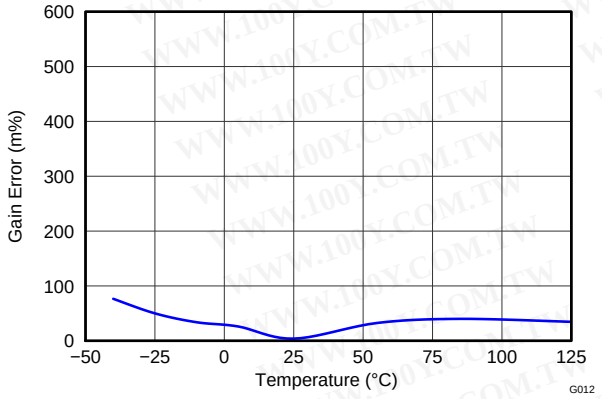

Figure 12.

INPUT BIAS CURRENT vs COMMON-MODE VOLTAGE

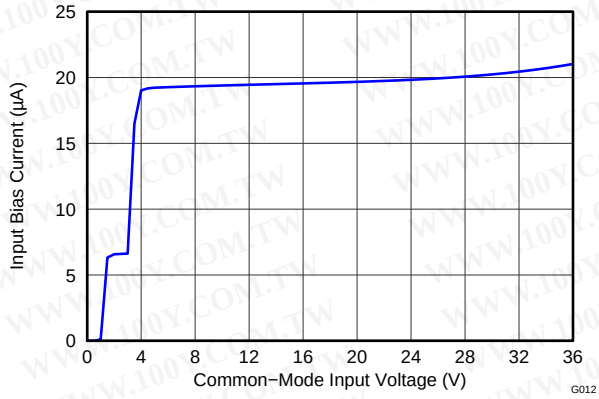

Figure 13.

WWW.100Y.COM.TW

TYPICAL CHARACTERISTICS (continued)

At T_A = +25°C, V_S = +3.3V, VIN+ = 12V, V_{SENSE} = (VIN+ – VIN–) = 0mV, V_{BUS} = 12V, unless otherwise noted.

INPUT BIAS CURRENT vs TEMPERATURE

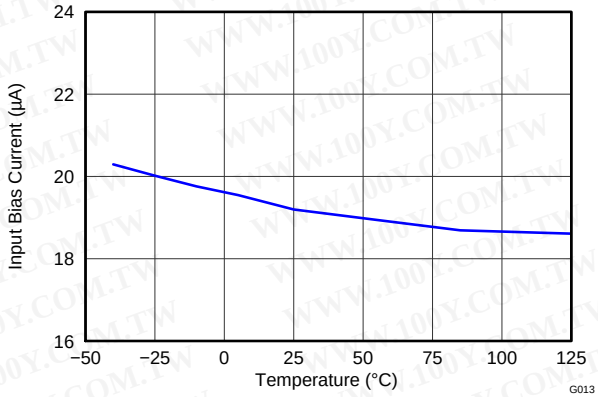

Figure 14.

INPUT BIAS CURRENT vs TEMPERATURE, SHUTDOWN

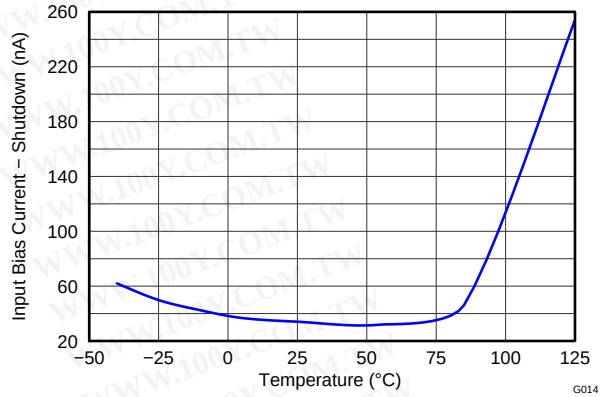

Figure 15.

ACTIVE I_Q vs TEMPERATURE

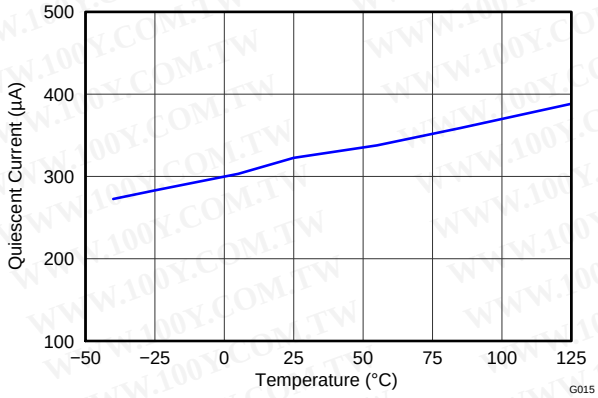

Figure 16.

SHUTDOWN I_Q vs TEMPERATURE

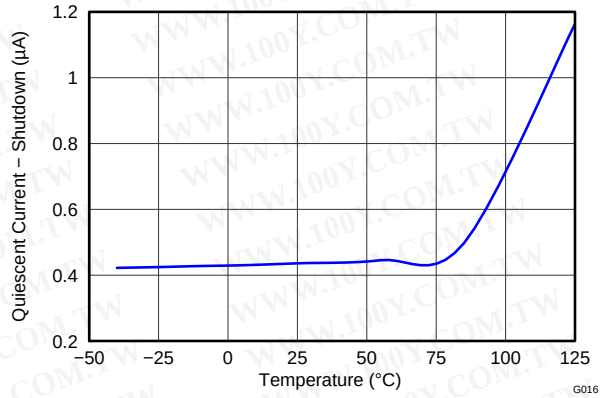

Figure 17.

ACTIVE I_Q vs I^2C CLOCK FREQUENCY

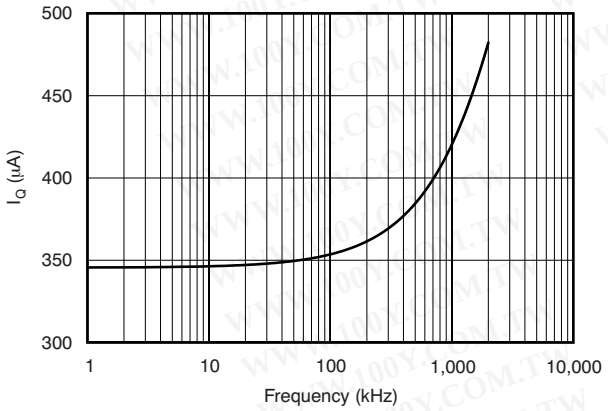

Figure 18.

SHUTDOWN I_Q vs I^2C CLOCK FREQUENCY

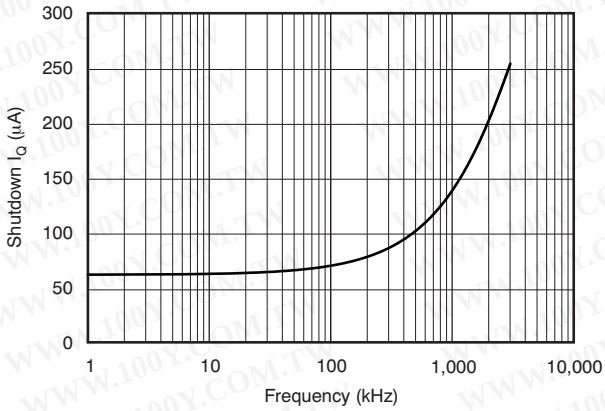

Figure 19.

Copyright © 2011, Texas Instruments Incorporated

APPLICATION INFORMATION

The INA226 is a digital current shunt monitor with an I^2C- and SMBus-compatible interface. It provides digital current, voltage, and power readings necessary for accurate decision-making in precisely-controlled systems. Programmable registers allow flexible configuration for measurement resolution as well as continuous-versus-triggered operation. Detailed register information appears at the end of this data sheet, beginning with Table 2. See the Register Block Diagram for a block diagram of the INA226.

INA226 TYPICAL APPLICATION

The front-page figure shows a typical application circuit for the INA226. Use a 0.1µF ceramic capacitor for power-supply bypassing, placed as closely as possible to the supply and ground pins.

BASIC ADC FUNCTIONS

The INA226 performs two measurements on the power-supply bus of interest. The voltage developed from the load current that flows through a shunt resistor creates a shunt voltage that is measured at the VIN+ and VIN– pins. The device can also measure the power supply bus voltage by connecting this voltage to the V_{BUS} pin. The differential shunt voltage is measured with respect to the VIN– pin while the bus voltage is measured with respect to ground.

The INA226 is typically powered by a separate supply that can range from 2.7V to 5.5V. The bus that is being monitored can range in voltage from 0V to 36V. It is important to note here that based on the fixed 1.25mV LSB for the bus voltage register that a full-scale register would result in a 40.96V value. **The actual voltage that is applied to the input pins of the INA226 should not exceed 36V.** There are no special considerations for power-supply sequencing because the common-mode input range and power-supply voltage are independent of each other; therefore, the bus voltage can be present with the supply voltage off, and vice-versa.

As noted, the INA226 takes two measurements, shunt voltage and bus voltage. It then converts these measurements to current, based on the Calibration Register value, and then calculates power. Refer to the Configure/Measure/Calculate Example section for additional information on programming the Calibration Register.

The INA226 has two operating modes, continuous and triggered, that determine how the ADC operates following these conversions. When the INA226 is in the normal operating mode (that is, MODE bits of the Configuration Register are set to '111'), it continuously converts a shunt voltage reading followed by a bus voltage reading. After the shunt voltage reading, the current value is calculated (based on Equation 3). This current value is then used to calculate the power result (using Equation 4). These values are subsequently stored in an accumulator, and the measurement/calculation sequence repeats until the number of averages set in the Configuration Register is reached. Following every sequence, the present set of values measured and calculated are appended to previously collected values. Once all of the averaging has been completed, the final values for shunt voltage, bus voltage, current, and power are updated in the corresponding registers that can then be read. These values remain in the data output registers until they are replaced by the next fully completed conversion results. Reading the data output registers does not affect a conversion in progress.

The Mode control in the Configuration Register also permits selecting modes to convert only the shunt voltage or the bus voltage in order to further allow the user to configure the monitoring function to fit the specific application requirements.

All current and power calculations are performed in the background and do not contribute to conversion time.

In triggered mode, writing any of the triggered convert modes into the Configuration Register (that is, MODE bits of the Configuration Register are set to ‘001’, ‘010’, or ‘011’) triggers a single-shot conversion. This action produces a single set of measurements; thus, to trigger another single-shot conversion, the Configuration Register must be written to a second time, even if the mode does not change.

In addition to the two operating modes (continuous and triggered), the INA226 also has a power-down mode that reduces the quiescent current and turns off current into the INA226 inputs, reducing the impact of supply drain when the device is not being used. Full recovery from power-down mode requires 40ms. The registers of the INA226 can be written to and read from while the device is in power-down mode. The device remains in power-down mode until one of the active modes settings are written into the Configuration Register.

Copyright © 2011, Texas Instruments Incorporated

Although the INA226 can be read at any time, and the data from the last conversion remain available, the Conversion Ready Flag bit (Mask/Enable Register, CVRF bit) is provided to help coordinate one-shot or triggered conversions. The Conversion Ready Flag bit is set after all conversions, averaging, and multiplication operations are complete.

The Conversion Ready Flag bit clears under these conditions:

1. Writing to the Configuration Register, except when configuring the MODE bits for power-down mode; or
2. Reading the Status Register.

Power Calculation

The Current and Power are calculated following shunt voltage and bus voltage measurements as shown in Figure 20. Current is calculated following a shunt voltage measurement based on the value set in the Calibration Register. If there is no value loaded into the Calibration Register, the current value stored is zero. Power is calculated following the bus voltage measurement based on the previous current calculation and bus voltage measurement. If there is no value loaded in the Calibration Register, the power value stored is also zero. Again, these calculations are performed in the background and do not add to the overall conversion time. These current and power values are considered intermediate results (unless the averaging is set to 1) and are stored in an internal accumulation register, not the corresponding output registers. Following every measured sample, the newly-calculated values for current and power are appended to this accumulation register until all of the samples have been measured and averaged based on the number of averages set in the Configuration Register.

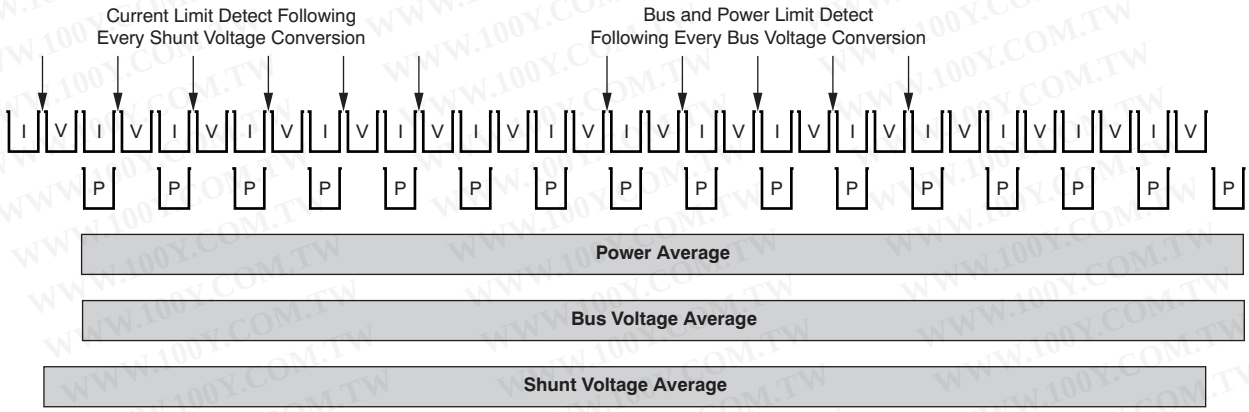

Figure 20. Power Calculation Scheme

In addition to the current and power accumulating after every sample, the shunt and bus voltage measurements are also collected. Once all of the samples have been measured and the corresponding current and power calculations have been made, the accumulated average for each of these parameters is then loaded to the corresponding output registers, where they can then be read.

Copyright © 2011, Texas Instruments Incorporated

Averaging and Conversion Time Considerations

The INA226 has programmable conversion times for both the shunt voltage and bus voltage measurements. The conversion times for these measurements can be selected from as fast as 140µs to as long as 8.244ms. The conversion time settings, along with the programmable averaging mode, allow the INA226 to be configured to optimize the available timing requirements in a given application. For example, if a system requires that data be read every 5ms, the INA226 could be configured with the conversion times set to 588µs and the averaging mode set to 4. This configuration results in the data updating approximately every 4.7ms. The INA226 could also be configured with a different conversion time setting for the shunt and bus voltage measurements. This type of approach is common in applications where the bus voltage tends to be relatively stable. This situation can allow for the time focused on the bus voltage measurement to be reduced relative to the shunt voltage measurement. The shunt voltage conversion time could be set to 4.156ms with the bus voltage conversion time set to 588µs, with the averaging mode set to 1. This configuration also results in data updating approximately every 4.7ms.

There are trade-offs associated with the settings for conversion time and the averaging mode used. The averaging feature can significantly improve the measurement accuracy by effectively filtering the signal. This approach allows the INA226 to reduce any noise in the measurement that may be caused by noise coupling into the signal. A greater number of averages enables the INA226 to be more effective in reducing the noise component of the measurement.

The conversion times selected can also have an impact on the measurement accuracy. This effect can seen in Figure 21. Multiple conversion times are shown here to illustrate the impact of noise on the measurement. In order to achieve the highest accuracy measurement possible, a combination of the longest allowable conversion times and highest number of averages should be used, based on the timing requirements of the system.

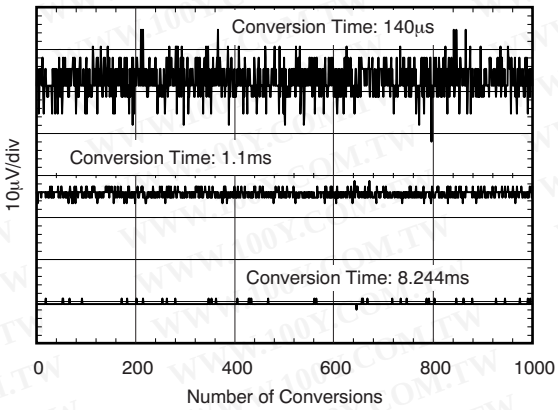

Figure 21. Noise vs Conversion Time

Filtering and Input Considerations

Measuring current is often noisy, and such noise can be difficult to define. The INA226 offers several options for filtering by allowing the conversion times and number of averages to be selected independently in the Configuration Register. The conversion times can be set independently for the shunt voltage and bus voltage measurements to allow added flexibility in configuring the monitoring of the power-supply bus.

The internal ADC is based on a delta-sigma (ΔΣ) front-end with a 500kHz (±30%) typical sampling rate. This architecture has good inherent noise rejection; however, transients that occur at or very close to the sampling rate harmonics can cause problems. Because these signals are at 1MHz and higher, they can be managed by incorporating filtering at the input of the INA226. The high frequency enables the use of low-value series resistors on the filter with negligible effects on measurement accuracy. In general, filtering the INA226 input is only necessary if there are transients at exact harmonics of the 500kHz (±30%) sampling rate (greater than 1MHz). Filter using the lowest possible series resistance (typically 10Ω or less) and a ceramic capacitor. Recommended values for this capacitor are 0.1μF to 1.0μF. Figure 22 shows the INA226 with an additional filter added at the input.

Overload conditions are another consideration for the INA226 inputs. The INA226 inputs are specified to tolerate 40V across the inputs. A large differential scenario might be a short to ground on the load side of the shunt. This type of event can result in full power-supply voltage across the shunt (as long the power supply or energy storage capacitors support it). Keep in mind that removing a short to ground can result in inductive kickbacks that could exceed the 40V differential and common-mode rating of the INA226. Inductive kickback voltages are best controlled by zener-type transient-absorbing devices (commonly called *transzorbs*) combined with sufficient energy storage capacitance.

In applications that do not have large energy storage electrolytics on one or both sides of the shunt, an input overstress condition may result from an excessive dV/dt of the voltage applied to the input. A hard physical short is the most likely cause of this event, particularly in applications with no large electrolytics present. This problem occurs because an excessive dV/dt can activate the ESD protection in the INA226 in systems where large currents are available. Testing has demonstrated that the addition of 10Ω resistors in series with each input of the INA226 sufficiently protect the inputs against this dV/dt failure up to the 40V rating of the INA226. Selecting these resistors in the range noted has minimal effect on accuracy.

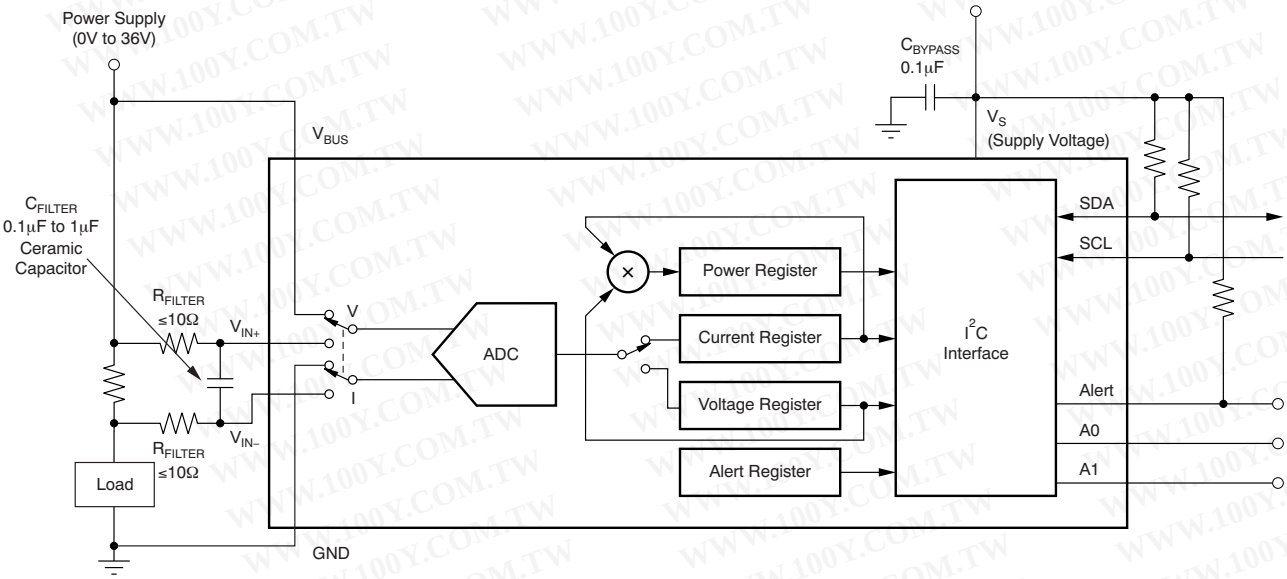

Figure 22. INA226 with Input Filtering

Copyright © 2011, Texas Instruments Incorporated

ALERT PIN

The INA226 has a single Alert Limit register, 07h, that allows the Alert pin to be programmed to respond to a single user-defined event or to a conversion ready notification if desired. The Mask/Enable Register allows the user to select from one of the five available functions to monitor and/or set the conversion ready bit to control the response of the Alert pin. Based on the function being monitored, the user would then enter a value into the Alert Limit Register to set the corresponding threshold value that asserts the Alert pin.

The Alert pin allows for one of several available alert functions to be monitored to determine if a user-defined threshold has been exceeded. The five alert functions that can be monitored are:

- Shunt Voltage Over Limit (SOL)
- Shunt Voltage Under Limit (SUL)
- Bus Voltage Over Limit (BOL)
- Bus Voltage Under Limit (BUL)
- Power Over Limit (POL)

The Alert pin is an open-drain output. This pin is asserted when the alert function selected in the Mask/Enable register exceeds the value programmed into the Alert Limit register. Only one of these alert functions can be enabled and monitored at a time. If multiple alert functions are enabled, the selected function in the highest significant bit position takes priority and responds to the Alert Limit register value. For example, if the Shunt Voltage Over Limit and the Shunt Voltage Under Limit are both selected, the Alert pin asserts when the Shunt Voltage Over Limit Register exceeds the value in the Alert Limit register.

The Conversion Ready state of the device can also be monitored at the Alert pin to inform the user when the device has completed the previous conversion and is ready to begin a new conversion. Conversion Ready can be monitored at the Alert pin along with one of the alert functions. If an alert function and the Conversion Ready are both enabled to be monitored at the Alert pin, after the Alert pin is asserted, the Mask/Enable register must be read following the alert to determine the source of the alert. By reading the Conversion Ready Flag (CVRF), bit D3, and the Alert Function Flag (AFF), bit D4 in the Mask/Enable register, the source of the alert can be determined. If the conversion ready feature is not desired, and the CNVR bit is not set, the Alert pin only responds to an exceeded alert limit based on the alert function enabled.

If the Alert function is not used, the Alert pin can be left floating without impacting the operation of the device.

Refer to Figure 20 to see the relative timing of when the value in the Alert Limit Register is compared to the corresponding converted value. For example, if the alert function that is enabled is Shunt Voltage Over Limit (SOL), following every shunt voltage conversion the value in the Alert Limit Register is compared to the measured shunt voltage to determine if the measurements has exceeded the programmed limit. The AFF, bit 4 of the Mask/Enable Register, asserts high any time the measured voltage exceeds the value programmed into the Alert Limit Register. In addition to the AFF being asserted, the Alert pin is asserted based on the Alert Polarity Bit (APOL, bit 1 of the Mask/Enable Register). If the Alert Latch is enabled, the AFF and Alert pin remain asserted until either the Configuration Register is written to or the Mask/Enable Register is read.

The Bus Voltage alert functions compare the measured bus voltage to the Alert Limit Register following every bus voltage conversion and assert the AFF bit and Alert pins if the limit threshold is exceeded.

The Power Over Limit alert function is also compared to the calculated power value following every bus voltage measurement conversion and asserts the AFF bit and Alert pins if the limit threshold is exceeded.

Copyright © 2011, Texas Instruments Incorporated

PROGRAMMING THE INA226

An important aspect of the INA226 is that it does not necessarily measure current or power. The INA226 measures both the differential voltage applied between the VIN+ and VIN- input pins and the voltage applied to the VBUS pin. In order for the INA226 to report both current and power values, the user must program the resolution of the Current Register and the value of the shunt resistor present in the application to develop the differential voltage applied between the input pins. The Power Register is internally set to be 25 times the programmed Current_LSB. Both the Current_LSB and shunt resistor value are used in the calculation of the Calibration Register value the INA226 uses to calculate the corresponding current and power values based on the measured shunt and bus voltages.

The Calibration Register is calculated based on Equation 1. This equation includes the term Current_LSB. This is the programmed value for the LSB for the Current Register. This is the value the user will use to convert the value in the Current Register to the actual current in amps. The highest resolution for the Current Register can be obtained by using the smallest allowable Current_LSB based on the maximum expected current as shown in Equation 2. While this value will yield the highest resolution, it is common to select a value for the Current_LSB to the nearest round number above this value to simplify the conversion of the Current Register and Power Register to amps and watts respectively. The RSHUNT term is the value of the external shunt used to develop the differential voltage across the input pins. The 0.00512 value in Equation 1 is an internal fixed value used to ensure scaling is maintained properly.

$$CAL = \frac{0.00512}{Current_LSB \bullet R_{SHUNT}} \tag{1}$$

$$Current_LSB = \frac{Maximum\ Expected\ Current}{2^{15}} \tag{2}$$

Once the Calibration Register has been programmed, the Current Register and Power Register will be updated accordingly based on the corresponding shunt voltage and bus voltage measurements. Until the Calibration Register is programmed, the Current and Power Registers remain at zero.

Copyright © 2011, Texas Instruments Incorporated

CONFIGURE/MEASURE/CALCULATE EXAMPLE

In this example, shown in Figure 23, a nominal 10A load creates a differential voltage of 20mV across a 2mΩ shunt resistor. The bus voltage for the INA226 is measured at the external V_{BUS} input pin, which in this example is connected to the VIN– pin to measure the voltage level delivered to the load. For this example, the V_{BUS} pin measures less than 12V because the voltage at the VIN– pin is 11.98V as a result of the voltage drop across the shunt resistor.

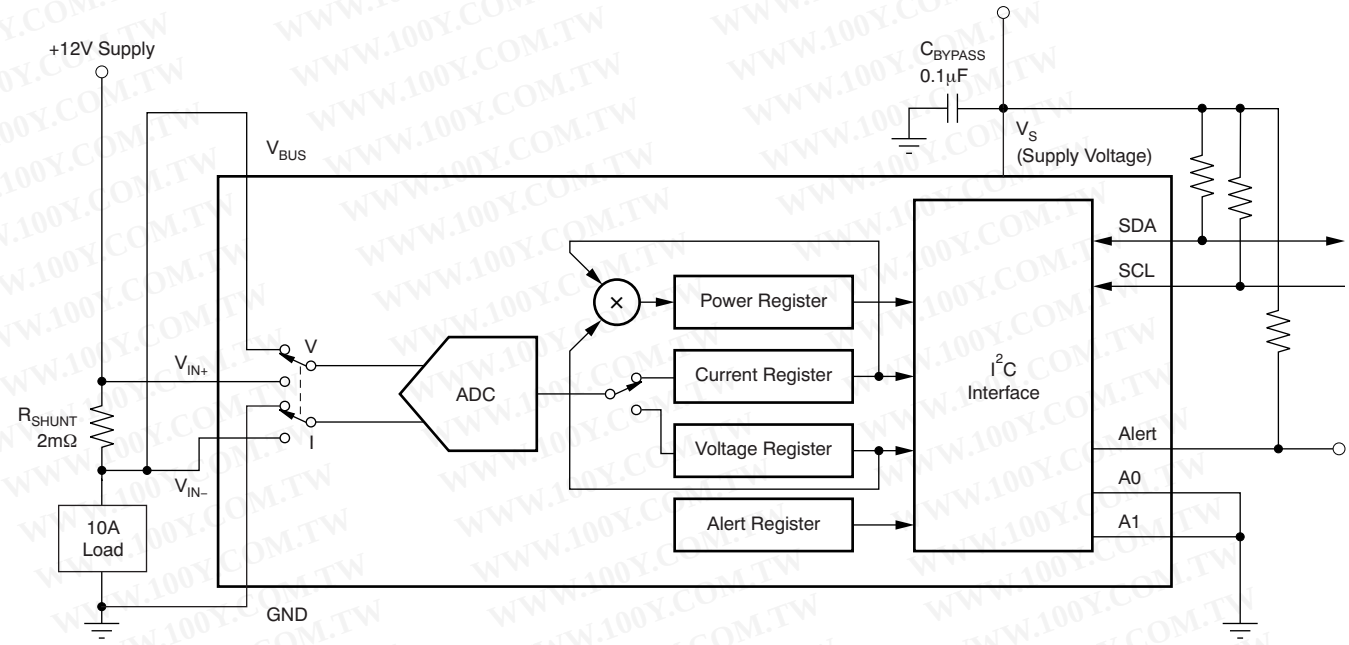

Figure 23. Example Circuit Configuration

For this example, assuming a maximum expected current of 15A, the Current_LSB is calculated to be 457.7µA/bit using Equation 2. Using a value for the Current_LSB of 500µA/Bit or 1mA/Bit would significantly simplifiy the conversion from the Current Register and Power Register to amps and watts. For this example, a value of 1mA/bit was chosen for the current LSB. Using this value for the Current_LSB does trade a small amount of resolution for having a simpler conversion process on the user side. Using Equation 1 in this example with a current LSB of 1mA/bit and a shunt resistor of 2mΩ results in a Calibration Register value of 2560, or A00h.

The Current Register (04h) is then calculated by multiplying the decimal value of the Shunt Voltage Register contents by the decimal value of the Calibration Register and then dividing by 2048, as shown in Equation 3. For this example, the Shunt Voltage Register contains a value of 8,000, which is multiplied by the Calibration Register value of 2560 and then divided by 2048 to yield a decimal value for the Current Register of 10000, or 2710h. Multiplying this value by 1mA/bit results in the original 10A level stated in the example.

$$\text{Current} = \frac{\text{ShuntVoltage} \bullet \text{CalibrationRegister}}{2048} \tag{3}$$

The LSB for the Bus Voltage Register (02h) is a fixed 1.25mV/bit, which means that the 11.98V present at the V_{BUS} pin results in a register value of 2570h, or a decimal equivalent of 9584. Note that the MSB of the Bus Voltage Register is always zero because the V_{BUS} pin is only able to measure positive voltages.

The Power Register (03h) is then be calculated by multiplying the decimal value of the Current Register, 10000, by the decimal value of the Bus Voltage Register, 9584, and then dividing by 20,000, as defined in Equation 4. For this example, the result for the Power Register is 12B8h, or a decimal equivalent of 4792. Multiplying this result by the power LSB (25 times the [1 × 10^{-3} Current LSB]) results in a power calculation of (4792 × 25mW/bit), or 119.82W. The power LSB has a fixed ratio to the current LSB of 25W/bit to 1A/bit. For this example, a programmed 1mA/bit current LSB results in a power LSB of 25mW/bit. This ratio is internally programmed to ensure that the scaling of the power calculation is within an acceptable range. A manual calculation for the power being delivered to the load would use a bus voltage of 11.98V ($12V_{CM}$ – 20mV shunt drop) multiplied by the load current of 10A to give a result of 119.8W.

$$\text{Power} = \frac{\text{Current} \bullet \text{BusVoltage}}{20{,}000} \tag{4}$$

Table 1 shows the steps for configuring, measuring, and calculating the values for current and power for this device.

Table 1. Configure/Measure/Calculate Example(1)

STEP #	REGISTER NAME	ADDRESS	CONTENTS	DEC	LSB	VALUE
Step 1	Configuration	00h	4127h	—	—	—
Step 2	Shunt	01h	1F40h	8000	2.5µV	20mV
Step 3	Bus	02h	2570h	9584	1.25mV	11.98V
Step 4	Calibration	05h	A00h	2560	—	—
Step 5	Current	04h	2710	10000	1mA	10A
Step 6	Power	03h	12B8h	4792	25mW	119.82W

(1) Conditions: Load = 10A, V_{CM} = 12V, R_{SHUNT} = 2mΩ, and V_{BUS} = 12V.

PROGRAMMING THE INA226 POWER MEASUREMENT ENGINE

Calibration Register and Scaling

The Calibration Register makes it possible to set the scaling of the Current and Power Registers to whatever values are most useful for a given application. One strategy may be to set the Calibration Register such that the largest possible number is generated in the Current Register or Power Register at the expected full-scale point. This approach would yield the highest resolution based using the previously calculated minimum current LSB in the equation for the Calibration Register. The Calibration Register can also be selected to provide values in the Current and Power Registers that either provide direct decimal equivalents of the values being measured, or yield a round LSB value for each corresponding register. After these choices have been made, the Calibration Register also offers possibilities for end user system-level calibration. By physically measuring the current with an external ammeter, the exact current is known. The value of the Calibration Register can then be adjusted based on the measured current result of the INA226 to cancel the total system error as shown in Equation 5.

$$\text{Corrected_Full_Scale_Cal} = \text{trunc}\left(\frac{\text{Cal} \times \text{MeasShuntCurrent}}{\text{INA226_Current}}\right) \tag{5}$$

Copyright © 2011, Texas Instruments Incorporated

Simple Current Shunt Monitor Usage (No Programming Necessary)

The INA226 can be used without any programming if it is only necessary to read a shunt voltage drop and bus voltage with the default power-on reset configuration and continuous conversion of shunt and bus voltage.

Without programming the INA226 Calibration Register, the device is unable to provide either a valid current or power value, because these outputs are both derived using the values loaded into the Calibration Register.

Default INA226 Settings

The default power-up states of the registers are shown in the INA226 Register Descriptions section of this data sheet. These registers are volatile, and if programmed to a value other than the default values shown in Table 2, they must be re-programmed at every device power-up. Detailed information on programming the Calibration Register specifically is given in the Configure/Measure/Calculate Example section and calculated based on Equation 1.

REGISTER INFORMATION

The INA226 uses a bank of registers for holding configuration settings, measurement results, minimum/maximum limits, and status information. Table 2 summarizes the INA226 registers; refer to Figure 1 for an illustration of the registers.

Table 2. Summary of Register Set

POINTER ADDRESS			POWER-ON RESET		
HEX	REGISTER NAME	FUNCTION	BINARY	HEX	TYPE (1)
0	Configuration Register	All-register reset, shunt voltage and bus voltage ADC conversion times and averaging, operating mode.	01000001 00100111	4127	R/$\overline{W}$
1	Shunt Voltage	Shunt voltage measurement data.	00000000 00000000	0000	R
2	Bus Voltage	Bus voltage measurement data.	00000000 00000000	0000	R
3	Power (2)	Contains the value of the calculated power being delivered to the load.	00000000 00000000	0000	R
4	Current (2)	Contains the value of the calculated current flowing through the shunt resistor.	00000000 00000000	0000	R
5	Calibration	Sets full-scale range and LSB of current and power measurements. Overall system calibration.	00000000 00000000	0000	R/$\overline{W}$
6	Mask/Enable	Alert configuration and conversion ready flag.	00000000 00000000	0000	R/$\overline{W}$
7	Alert Limit	Contains the limit value to compare to the selected Alert function.	00000000 00000000	0000	R/$\overline{W}$
FF	Die ID	Contains unique die identification number.	ASCII	ASCII	R

(1) Type: **R** = Read-Only, **R/$\overline{W}$** = Read/Write.
(2) The Current Register defaults to '0' because the Calibration Register defaults to '0', yielding a zero current and power value until the Calibration Register is programmed.

WWW.100Y.COM.TW

REGISTER DETAILS

All 16-bit INA226 registers are two 8-bit bytes via the I^2C interface.

Configuration Register 00h (Read/Write)

BIT #	D15	D14	D13	D12	D11	D10	D9	D8	D7	D6	D5	D4	D3	D2	D1	D0
BIT NAME	RST	—	—	—	AVG2	AVG1	AVG0	$V_{BUS}CT2$	$V_{BUS}CT1$	$V_{BUS}CT0$	$V_{SH}CT2$	$V_{SH}CT1$	$V_{SH}CT0$	MODE3	MODE2	MODE1
POR VALUE	0	1	0	0	0	0	0	1	0	0	1	0	0	1	1	1

The Configuration Register settings control the operating modes for the INA226. This register controls the conversion time settings for both the shunt and bus voltage measurements as well as the averaging mode used. The operating mode that controls what signals are selected to be measured is also programmed in the Configuration Register.

The Configuration Register can be read from at any time without impacting or affecting the device settings or a conversion in progress. Writing to the Configuration Register will halt any conversion in progress until the write sequence is completed resulting in a new conversion starting based on the new contents of the Configuration Register. This prevents any uncertainty in the conditions used for the next completed conversion.

Bit Descriptions

RST: **Reset Bit**

Bit 15 Setting this bit to '1' generates a system reset that is the same as power-on reset. Resets all registers to default values; this bit self-clears.

AVG: **Averaging Mode**

Bits 9–11 Sets the number of samples that will be collected and averaged together. Table 3 summarizes the AVG bit settings and related number of averages for each bit.

Table 3. AVG Bit Settings[11:9](1)

AVG2 D11	AVG1 D10	AVG0 D9	NUMBER OF AVERAGES
0	0	0	1
0	0	1	4
0	1	0	16
0	1	1	64
1	0	0	128
1	0	1	256
1	1	0	512
1	1	1	1024

(1) Shaded values are default.

Copyright © 2011, Texas Instruments Incorporated

V_{BUS} CT: **Bus Voltage Conversion Time**

Bits 6–8 Sets the conversion time for the bus voltage measurement. Table 4 shows the V_{BUS} CT bit options and related conversion times for each bit.

Table 4. V_{BUS} CT Bit Settings [8:6] (1)

V_{BUS} CT2 D8	V_{BUS} CT1 D7	V_{BUS} CT0 D6	CONVERSION TIME
0	0	0	140µs
0	0	1	204µs
0	1	0	332µs
0	1	1	588µs
1	0	0	1.1ms
1	0	1	2.116ms
1	1	0	4.156ms
1	1	1	8.244ms

(1) Shaded values are default.

V_{SH} CT: **Shunt Voltage Conversion Time**

Bits 3–5 Sets the conversion time for the shunt voltage measurement. Table 5 shows the V_{SH} CT bit options and related conversion times for each bit.

Table 5. V_{SH} CT Bit Settings [5:3](1)

V_{SH} CT2 D5	V_{SH} CT1 D4	V_{SH} CT0 D3	CONVERSION TIME
0	0	0	140µs
0	0	1	204µs
0	1	0	332µs
0	1	1	588µs
1	0	0	1.1ms
1	0	1	2.116ms
1	1	0	4.156ms
1	1	1	8.244ms

(1) Shaded values are default.

MODE: **Operating Mode**

Bits 0–2 Selects continuous, triggered, or power-down mode of operation. These bits default to continuous shunt and bus measurement mode. The mode settings are shown in Table 6.

Table 6. Mode Settings [2:0](1)

MODE3 D2	MODE2 D1	MODE1 D0	MODE
0	0	0	Power-Down
0	0	1	Shunt Voltage, Triggered
0	1	0	Bus Voltage, Triggered
0	1	1	Shunt and Bus, Triggered
1	0	0	Power-Down
1	0	1	Shunt Voltage, Continuous
1	1	0	Bus Voltage, Continuous
1	1	1	Shunt and Bus, Continuous

(1) Shaded values are default.

Copyright © 2011, Texas Instruments Incorporated

DATA OUTPUT REGISTERS

Shunt Voltage Register 01h (Read-Only)

The Shunt Voltage Register stores the current shunt voltage reading, V_{SHUNT}. Negative numbers are represented in twos complement format. Generate the twos complement of a negative number by complementing the absolute value binary number and adding 1. Extend the sign, denoting a negative number by setting the MSB = '1'.

Example: For a value of V_{SHUNT} = –80mV:

1. Take the absolute value: 80mV
2. Translate this number to a whole decimal number (80mV ÷ 2.5µV) = 32000
3. Convert this number to binary = 111 1101 0000 0000
4. Complement the binary result = 000 0010 1111 1111
5. Add '1' to the complement to create the twos complement result = 000 0011 0000 0000
6. Extend the sign and create the 16-bit word: 1000 0011 0000 0000 = 8300h

If averaging is enabled, this register displays the averaged value. Full-scale range = 81.92mV (decimal = 7FFF); LSB: 2.5µV.

BIT #	D15	D14	D13	D12	D11	D10	D9	D8	D7	D6	D5	D4	D3	D2	D1	D0
BIT NAME	SIGN	SD14	SD13	SD12	SD11	SD10	SD9	SD8	SD7	SD6	SD5	SD4	SD3	SD2	SD1	SD0
POR VALUE	0	0	0	0	0	0	0	0	0	0	0	0	0	0	0	0

Bus Voltage Register 02h (Read-Only)(1)

The Bus Voltage Register stores the most recent bus voltage reading, V_{BUS}.

If averaging is enabled, this register displays the averaged value. Full-scale range = 40.96V (decimal = 7FFF); LSB = 1.25mV.

BIT #	D15	D14	D13	D12	D11	D10	D9	D8	D7	D6	D5	D4	D3	D2	D1	D0
BIT NAME	—	BD14	BD13	BD12	BD11	BD10	BD9	BD8	BD7	BD6	BD5	BD4	BD3	BD2	BD1	BD0
POR VALUE	0	0	0	0	0	0	0	0	0	0	0	0	0	0	0	0

(1) D15 is always zero because bus voltage can only be positive.

Power Register 03h (Read-Only)

If averaging is enabled, this register displays the averaged value.

BIT #	D15	D14	D13	D12	D11	D10	D9	D8	D7	D6	D5	D4	D3	D2	D1	D0
BIT NAME	PD15	PD14	PD13	PD12	PD11	PD10	PD9	PD8	PD7	PD6	PD5	PD4	PD3	PD2	PD1	PD0
POR VALUE	0	0	0	0	0	0	0	0	0	0	0	0	0	0	0	0

The Power Register LSB is internally programmed to equal 25 times the programmed value of the Current_LSB.

The Power Register records power in watts by multiplying the decimal values of the current register with the decimal value of the bus voltage register according to Equation 4.

Copyright © 2011, Texas Instruments Incorporated

Current Register 04h (Read-Only)

If averaging is enabled, this register displays the averaged value.

BIT #	D15	D14	D13	D12	D11	D10	D9	D8	D7	D6	D5	D4	D3	D2	D1	D0
BIT NAME	CSIGN	CD14	CD13	CD12	CD11	CD10	CD9	CD8	CD7	CD6	CD5	CD4	CD3	CD2	CD1	CD0
POR VALUE	0	0	0	0	0	0	0	0	0	0	0	0	0	0	0	0

The value of the Current Register is calculated by multiplying the decimal value in the Shunt Voltage Register with the decimal value of the Calibration Register, according to Equation 3.

Calibration Register 05h (Read/Write)

This register provides the INA226 with the value of the shunt resistor that was present to create the measured differential voltage. It also sets the resolution of the Current Register. The current LSB and power LSB are set through the programming of this register. This register is also suitable for use in overall system calibration. See the Configure/Measure/Calculate Example for additional information on programming the Calibration Register.

BIT #	D15	D14	D13	D12	D11	D10	D9	D8	D7	D6	D5	D4	D3	D2	D1	D0
BIT NAME	—	FS14	FS13	FS12	FS11	FS10	FS9	FS8	FS7	FS6	FS5	FS4	FS3	FS2	FS1	FS0
POR VALUE	0	0	0	0	0	0	0	0	0	0	0	0	0	0	0	0

Mask/Enable 06h (Read/Write)

The Mask/Enable Register selects the function that is enabled to control the Alert pin, as well as how that pin functions. If multiple functions are enabled, the highest significant bit position Alert Function (D11-D15) takes priority and responds to the Alert Limit register.

BIT #	D15	D14	D13	D12	D11	D10	D9	D8	D7	D6	D5	D4	D3	D2	D1	D0
BIT NAME	SOL	SUL	BOL	BUL	POL	CNVR	—	—	—	—	—	AFF	CVRF	OVF	APOL	LEN
POR VALUE	0	0	0	0	0	0	0	0	0	0	0	0	0	0	0	0

SOL: **Shunt Voltage Over-Voltage**

Bit 15 Setting this bit high configures the Alert pin to be asserted when the Shunt Voltage Register exceeds the value in the Alert Limit Register.

SUL: **Shunt Voltage Under-Voltage**

Bit 14 Setting this bit high configures the Alert pin to be asserted when the Shunt Voltage Register drops below the value in the Alert Limit Register.

BOL: **Bus Voltage Over-Voltage**

Bit 13 Setting this bit high configures the Alert pin to be asserted when the Bus Voltage Register exceeds the value in the Alert Limit Register.

BUL: **Bus Voltage Under-Voltage**

Bit 12 Setting this bit high configures the Alert pin to be asserted when the Bus Voltage Register drops below the value in the Alert Limit Register.

POL: **Over-Limit Power**

Bit 11 Setting this bit high configures the Alert pin to be asserted when the Power Register exceeds the value in the Alert Limit Register.

CNVR: **Conversion Ready**

Bit 10 Setting this bit high configures the Alert pin to be asserted when the Conversion Ready Flag, Bit 3, is asserted indicating that the device is ready for the next conversion.

Copyright © 2011, Texas Instruments Incorporated

AFF: **Alert Function Flag**

Bit 4

While only one Alert Function can be monitored at the Alert pin at a time, the Conversion Ready can also be enabled to assert the Alert pin. Reading the Alert Function Flag following an alert allows the user to determine if the Alert Function was the source of the Alert.

When the Alert Latch Enable bit is set to Latch mode, the Alert Function Flag clears only when the Mask/Enable Register is read. When the Alert Latch Enable bit is set to Transparent mode, the Alert Function Flag is cleared following the next conversion that does not result in an Alert condition.

CVRF: **Conversion Ready Flag**

Bit 3

Although the INA226 can be read at any time, and the data from the last conversion is available, the Conversion Ready bit is provided to help coordinate one-shot or triggered conversions. The Conversion bit is set after all conversions, averaging, and multiplications are complete. Conversion Ready clears under the following conditions:

1.) Writing to the Configuration Register (except for Power-Down or Disable selections)

2.) Reading the Mask/Enable Register

OVF: **Math Overflow Flag**

Bit 2

This bit is set to '1' if an arithmetic operation resulted in an overflow error. It indicates that current and power data may be invalid.

APOL: **Alert Polarity bit; sets the Alert pin polarity.**

Bit 1

1 = Inverted (active-high open collector)
0 = Normal (active-low open collector) (default)

LEN: **Alert Latch Enable; configures the latching feature of the Alert pin and Flag bits.**

Bit 0

1 = Latch enabled
0 = Transparent (default)

When the Alert Latch Enable bit is set to Transparent mode, the Alert pin and Flag bits will reset to their idle states when the fault has been cleared. When the Alert Latch Enable bit is set to Latch mode, the Alert pin and Flag bits will remain active following a fault until the Mask/Enable Register has been read.

Alert Limit 07h (Read/Write)

The Alert Limit Register contains the value used to compare to the register selected in the Mask/Enable Register to determine if a limit has been exceeded.

BIT #	D15	D14	D13	D12	D11	D10	D9	D8	D7	D6	D5	D4	D3	D2	D1	D0
BIT NAME	AUL15	AUL14	AUL13	AUL12	AUL11	AUL10	AUL9	AUL8	AUL7	AUL6	AUL5	AUL4	AUL3	AUL2	AUL1	AUL0
POR VALUE	0	0	0	0	0	0	0	0	0	0	0	0	0	0	0	0

BUS OVERVIEW

The INA226 offers compatibility with both I^2C and SMBus interfaces. The I^2C and SMBus protocols are essentially compatible with one another.

The I^2C interface is used throughout this data sheet as the primary example, with SMBus protocol specified only when a difference between the two systems is discussed. Two bidirectional lines, SCL and SDA, connect the INA226 to the bus. Both SCL and SDA are open-drain connections.

The device that initiates a data transfer is called a *master*, and the devices controlled by the master are *slaves*. The bus must be controlled by a master device that generates the serial clock (SCL), controls the bus access, and generates START and STOP conditions.

To address a specific device, the master initiates a start condition by pulling the data signal line (SDA) from a high to a low logic level while SCL is high. All slaves on the bus shift in the slave address byte on the rising edge of SCL, with the last bit indicating whether a read or write operation is intended. During the ninth clock pulse, the slave being addressed responds to the master by generating an Acknowledge and pulling SDA low.

Copyright © 2011, Texas Instruments Incorporated

Data transfer is then initiated and eight bits of data are sent, followed by an *Acknowledge* bit. During data transfer, SDA must remain stable while SCL is high. Any change in SDA while SCL is high is interpreted as a start or stop condition.

Once all data have been transferred, the master generates a stop condition, indicated by pulling SDA from low to high while SCL is high. The INA226 includes a 28ms timeout on its interface to prevent locking up the bus.

Serial Bus Address

To communicate with the INA226, the master must first address slave devices via a slave address byte. The slave address byte consists of seven address bits and a direction bit that indicates whether the action is to be a read or write operation.

The INA226 has two address pins, A0 and A1. Table 7 describes the pin logic levels for each of the 16 possible addresses. The state of pins A0 and A1 is sampled on every bus communication and should be set before any activity on the interface occurs.

Table 7. INA226 Address Pins and Slave Addresses

A1	A0	SLAVE ADDRESS
GND	GND	1000000
GND	V_{S+}	1000001
GND	SDA	1000010
GND	SCL	1000011
V_{S+}	GND	1000100
V_{S+}	V_{S+}	1000101
V_{S+}	SDA	1000110
V_{S+}	SCL	1000111
SDA	GND	1001000
SDA	V_{S+}	1001001
SDA	SDA	1001010
SDA	SCL	1001011
SCL	GND	1001100
SCL	V_{S+}	1001101
SCL	SDA	1001110
SCL	SCL	1001111

Serial Interface

The INA226 operates only as a slave device on both the I^2C bus and the SMBus. Connections to the bus are made via the open-drain I/O lines SDA and SCL. The SDA and SCL pins feature integrated spike suppression filters and Schmitt triggers to minimize the effects of input spikes and bus noise. While there is spike suppression integrated into the digital I/O lines, proper layout should be used to minimize the amount of coupling into the communication lines. This noise introduction could occur from capacitively coupling signal edges between the two communication lines themselves or from other switching noise sources present in the system. Routing traces in parallel with ground in between layers on a printed circuit board (PCB) typically reduces the effects of coupling between the communication lines. Shielding communication lines in general is recommended to reduce to possibility of unintended noise coupling into the digital I/O lines that could be incorrectly interpreted as start or stop commands.

The INA226 supports the transmission protocol for Fast (1kHz to 400kHz) and High-speed (1kHz to 3.4MHz) modes. All data bytes are transmitted most significant byte first.

Copyright © 2011, Texas Instruments Incorporated

WRITING TO/READING FROM THE INA226

Accessing a specific register on the INA226 is accomplished by writing the appropriate value to the register pointer. Refer to Table 2 for a complete list of registers and corresponding addresses. The value for the register pointer (as shown in Figure 27) is the first byte transferred after the slave address byte with the R/$\overline{W}$ bit low. Every write operation to the INA226 requires a value for the register pointer.

Writing to a register begins with the first byte transmitted by the master. This byte is the slave address, with the R/$\overline{W}$ bit low. The INA226 then acknowledges receipt of a valid address. The next byte transmitted by the master is the address of the register which data will be written to. This register address value updates the register pointer to the desired register. The next two bytes are written to the register addressed by the register pointer. The INA226 acknowledges receipt of each data byte. The master may terminate data transfer by generating a start or stop condition.

When reading from the INA226, the last value stored in the register pointer by a write operation determines which register is read during a read operation. To change the register pointer for a read operation, a new value must be written to the register pointer. This write is accomplished by issuing a slave address byte with the R/$\overline{W}$ bit low, followed by the register pointer byte. No additional data are required. The master then generates a start condition and sends the slave address byte with the R/$\overline{W}$ bit high to initiate the read command. The next byte is transmitted by the slave and is the most significant byte of the register indicated by the register pointer. This byte is followed by an *Acknowledge* from the master; then the slave transmits the least significant byte. The master acknowledges receipt of the data byte. The master may terminate data transfer by generating a *Not-Acknowledge* after receiving any data byte, or generating a start or stop condition. If repeated reads from the same register are desired, it is not necessary to continually send the register pointer bytes; the INA226 retains the register pointer value until it is changed by the next write operation.

Figure 24 and Figure 25 show the write and read operation timing diagrams, respectively. Note that register bytes are sent most-significant byte first, followed by the least significant byte.

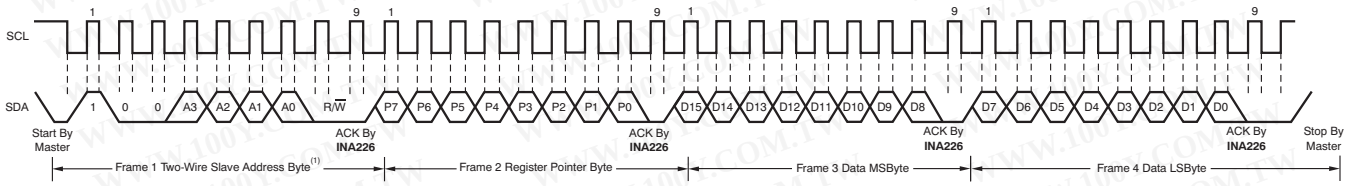

(1) The value of the Slave Address byte is determined by the settings of the A0 and A1 pins. Refer to Table 7.

Figure 24. Timing Diagram for Write Word Format

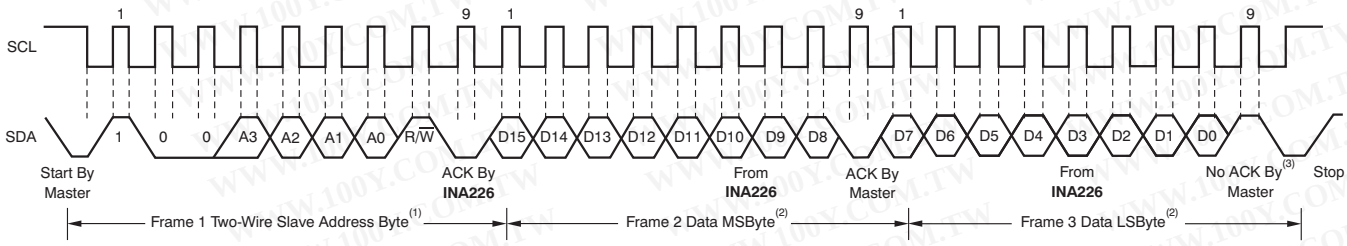

(1) The value of the Slave Address byte is determined by the settings of the A0 and A1 pins. Refer to Table 7.

(2) Read data is from the last register pointer location. If a new register is desired, the register pointer must be updated. See Figure 23.

(3) ACK by Master can also be sent.

Figure 25. Timing Diagram for Read Word Format

Copyright © 2011, Texas Instruments Incorporated

Figure 26 shows the timing diagram for the SMBus Alert response operation. Figure 27 illustrates a typical register pointer configuration.

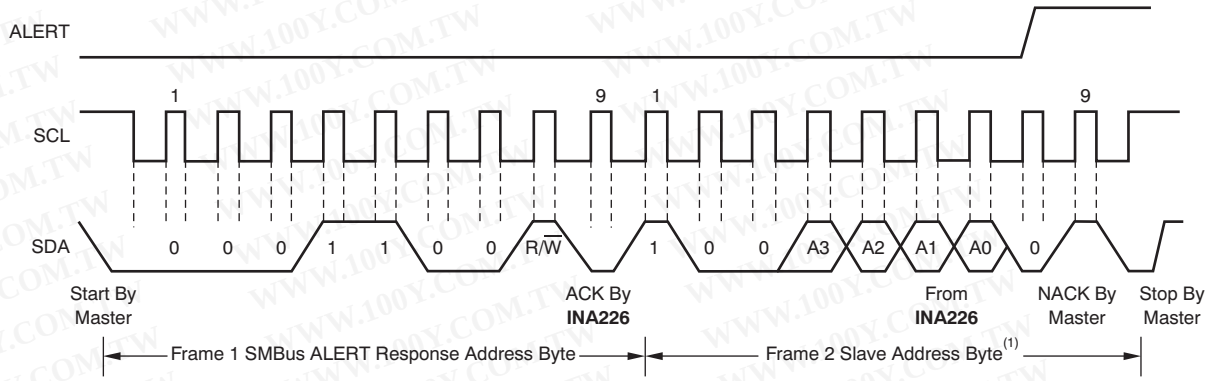

(1) The value of the Slave Address Byte is determined by the settings of the A0 and A1 pins. Refer to Table 7.

Figure 26. Timing Diagram for SMBus ALERT

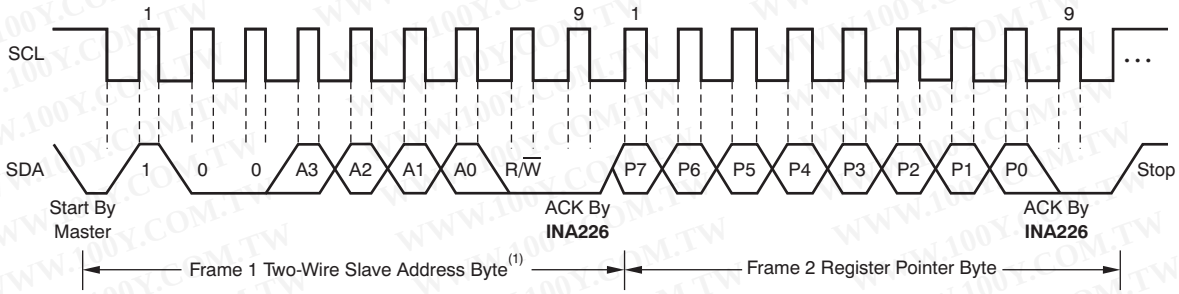

(1) The value of the Slave Address Byte is determined by the settings of the A0 and A1 pins. Refer to Table 7.

Figure 27. Typical Register Pointer Set

High-Speed I²C Mode

When the bus is idle, both the SDA and SCL lines are pulled high by the pull-up devices. The master generates a start condition followed by a valid serial byte containing High-Speed (HS) master code *00001XXX*. This transmission is made in fast (400kHz) or standard (100kHz) (F/S) mode at no more than 400kHz. The INA226 does not acknowledge the HS master code, but does recognize it and switches its internal filters to support 3.4MHz operation.

The master then generates a repeated start condition (a repeated start condition has the same timing as the start condition). After this repeated start condition, the protocol is the same as F/S mode, except that transmission speeds up to 3.4MHz are allowed. Instead of using a stop condition, repeated start conditions should be used to secure the bus in HS-mode. A stop condition ends the HS-mode and switches all the internal filters of the INA226 to support the F/S mode.

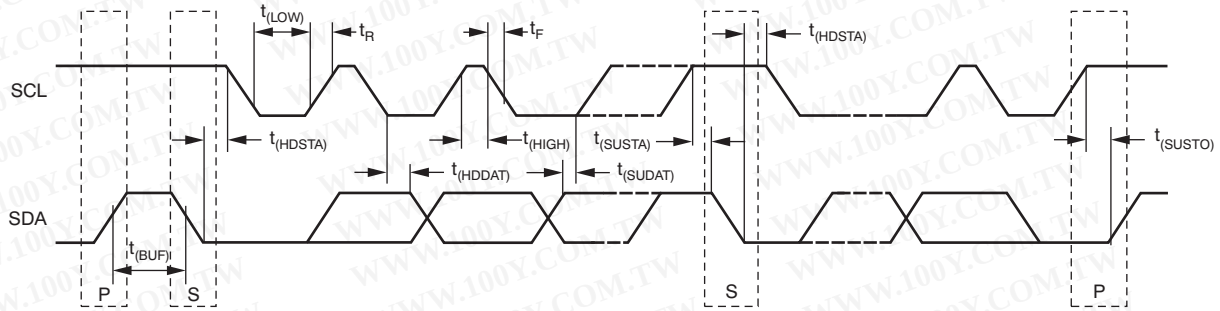

Figure 28. Bus Timing Diagram

Bus Timing Diagram Definitions

PARAMETER		FAST MODE		HIGH-SPEED MODE		UNITS
		MIN	MAX	MIN	MAX	
SCL operating frequency	$f_{(SCL)}$	0.001	0.4	0.001	3.4	MHz
Bus free time between stop and start conditions	$t_{(BUF)}$	600		160		ns
Hold time after repeated START condition. After this period, the first clock is generated.	$t_{(HDSTA)}$	100		100		ns
Repeated start condition setup time	$t_{(SUSTA)}$	100		100		ns
STOP condition setup time	$t_{(SUSTO)}$	100		100		ns
Data hold time	$t_{(HDDAT)}$	0		0		ns
Data setup time	$t_{(SUDAT)}$	100		10		ns
SCL clock low period	$t_{(LOW)}$	1300		160		ns
SCL clock high period	$t_{(HIGH)}$	600		60		ns
Clock/data fall time	t_F		300		160	ns
Clock/data rise time	t_R		300		160	ns
Clock/data rise time for SCLK ≤ 100kHz	t_R		1000			ns

Copyright © 2011, Texas Instruments Incorporated

SMBus Alert Response

The INA226 is designed to respond to the SMBus Alert Response address. The SMBus Alert Response provides a quick fault identification for simple slave devices. When an Alert occurs, the master can broadcast the Alert Response slave address (0001 100) with the Read/Write bit set high. Following this Alert Response, any slave devices that generated an alert will identify themselves by acknowledging the Alert Response and sending their respective address on the bus.

The Alert Response can activate several different slave devices simultaneously, similar to the I^2C General Call. If more than one slave attempts to respond, bus arbitration rules apply. The losing device does not generate an Acknowledge and continues to hold the Alert line low until the interrupt is cleared.

WWW.100Y.COM.TW

PACKAGING INFORMATION

Orderable Device	Status (1)	Package Type	Package Drawing	Pins	Package Qty	Eco Plan (2)	Lead/Ball Finish	MSL Peak Temp (3)	Op Temp (°C)	Top-Side Markings (4)	Samples
INA226AIDGSR	ACTIVE	VSSOP	DGS	10	2500	Green (RoHS & no Sb/Br)	CU NIPDAUAG	Level-2-260C-1 YEAR	-40 to 125	226	Samples
INA226AIDGST	ACTIVE	VSSOP	DGS	10	250	Green (RoHS & no Sb/Br)	CU NIPDAUAG	Level-2-260C-1 YEAR	-40 to 125	226	Samples

(1) The marketing status values are defined as follows:
ACTIVE: Product device recommended for new designs.
LIFEBUY: TI has announced that the device will be discontinued, and a lifetime-buy period is in effect.
NRND: Not recommended for new designs. Device is in production to support existing customers, but TI does not recommend using this part in a new design.
PREVIEW: Device has been announced but is not in production. Samples may or may not be available.
OBSOLETE: TI has discontinued the production of the device.

(2) Eco Plan - The planned eco-friendly classification: Pb-Free (RoHS), Pb-Free (RoHS Exempt), or Green (RoHS & no Sb/Br) - please check http://www.ti.com/productcontent for the latest availability information and additional product content details.
TBD: The Pb-Free/Green conversion plan has not been defined.
Pb-Free (RoHS): TI's terms "Lead-Free" or "Pb-Free" mean semiconductor products that are compatible with the current RoHS requirements for all 6 substances, including the requirement that lead not exceed 0.1% by weight in homogeneous materials. Where designed to be soldered at high temperatures, TI Pb-Free products are suitable for use in specified lead-free processes.
Pb-Free (RoHS Exempt): This component has a RoHS exemption for either 1) lead-based flip-chip solder bumps used between the die and package, or 2) lead-based die adhesive used between the die and leadframe. The component is otherwise considered Pb-Free (RoHS compatible) as defined above.
Green (RoHS & no Sb/Br): TI defines "Green" to mean Pb-Free (RoHS compatible), and free of Bromine (Br) and Antimony (Sb) based flame retardants (Br or Sb do not exceed 0.1% by weight in homogeneous material)

(3) MSL, Peak Temp. -- The Moisture Sensitivity Level rating according to the JEDEC industry standard classifications, and peak solder temperature.

(4) Multiple Top-Side Markings will be inside parentheses. Only one Top-Side Marking contained in parentheses and separated by a "~" will appear on a device. If a line is indented then it is a continuation of the previous line and the two combined represent the entire Top-Side Marking for that device.

Important Information and Disclaimer: The information provided on this page represents TI's knowledge and belief as of the date that it is provided. TI bases its knowledge and belief on information provided by third parties, and makes no representation or warranty as to the accuracy of such information. Efforts are underway to better integrate information from third parties. TI has taken and continues to take reasonable steps to provide representative and accurate information but may not have conducted destructive testing or chemical analysis on incoming materials and chemicals. TI and TI suppliers consider certain information to be proprietary, and thus CAS numbers and other limited information may not be available for release.

In no event shall TI's liability arising out of such information exceed the total purchase price of the TI part(s) at issue in this document sold by TI to Customer on an annual basis.

TAPE AND REEL INFORMATION

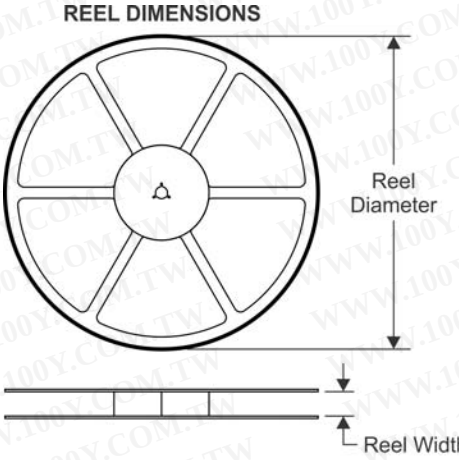

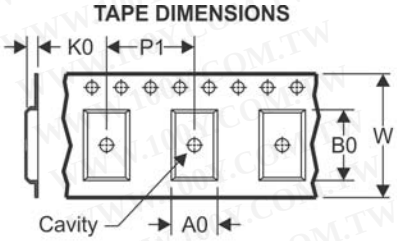

A0	Dimension designed to accommodate the component width
B0	Dimension designed to accommodate the component length
K0	Dimension designed to accommodate the component thickness
W	Overall width of the carrier tape
P1	Pitch between successive cavity centers

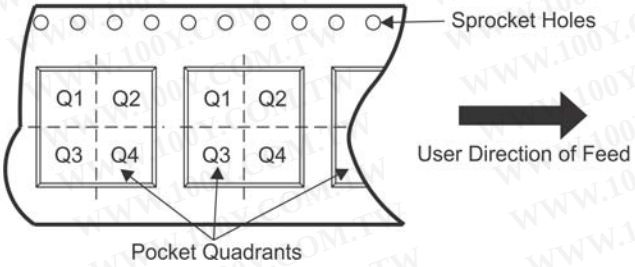

*All dimensions are nominal

Device	Package Type	Package Drawing	Pins	SPQ	Reel Diameter (mm)	Reel Width W1 (mm)	A0 (mm)	B0 (mm)	K0 (mm)	P1 (mm)	W (mm)	Pin1 Quadrant
INA226AIDGSR	VSSOP	DGS	10	2500	330.0	12.4	5.3	3.4	1.4	8.0	12.0	Q1
INA226AIDGST	VSSOP	DGS	10	250	330.0	12.4	5.3	3.4	1.4	8.0	12.0	Q1

TAPE AND REEL BOX DIMENSIONS

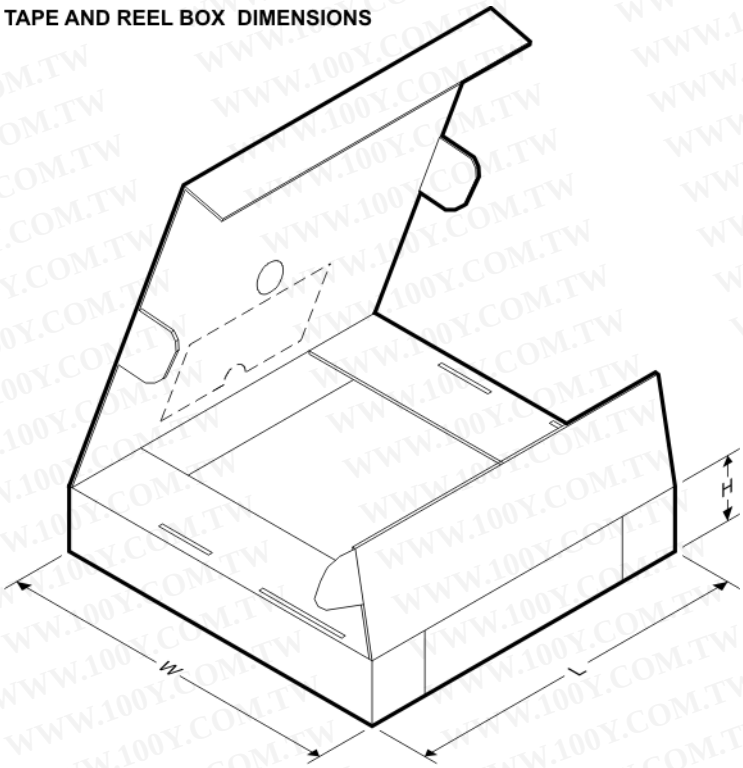

*All dimensions are nominal

Device	Package Type	Package Drawing	Pins	SPQ	Length (mm)	Width (mm)	Height (mm)
INA226AIDGSR	VSSOP	DGS	10	2500	366.0	364.0	50.0
INA226AIDGST	VSSOP	DGS	10	250	366.0	364.0	50.0

DGS (S–PDSO–G10) PLASTIC SMALL–OUTLINE PACKAGE

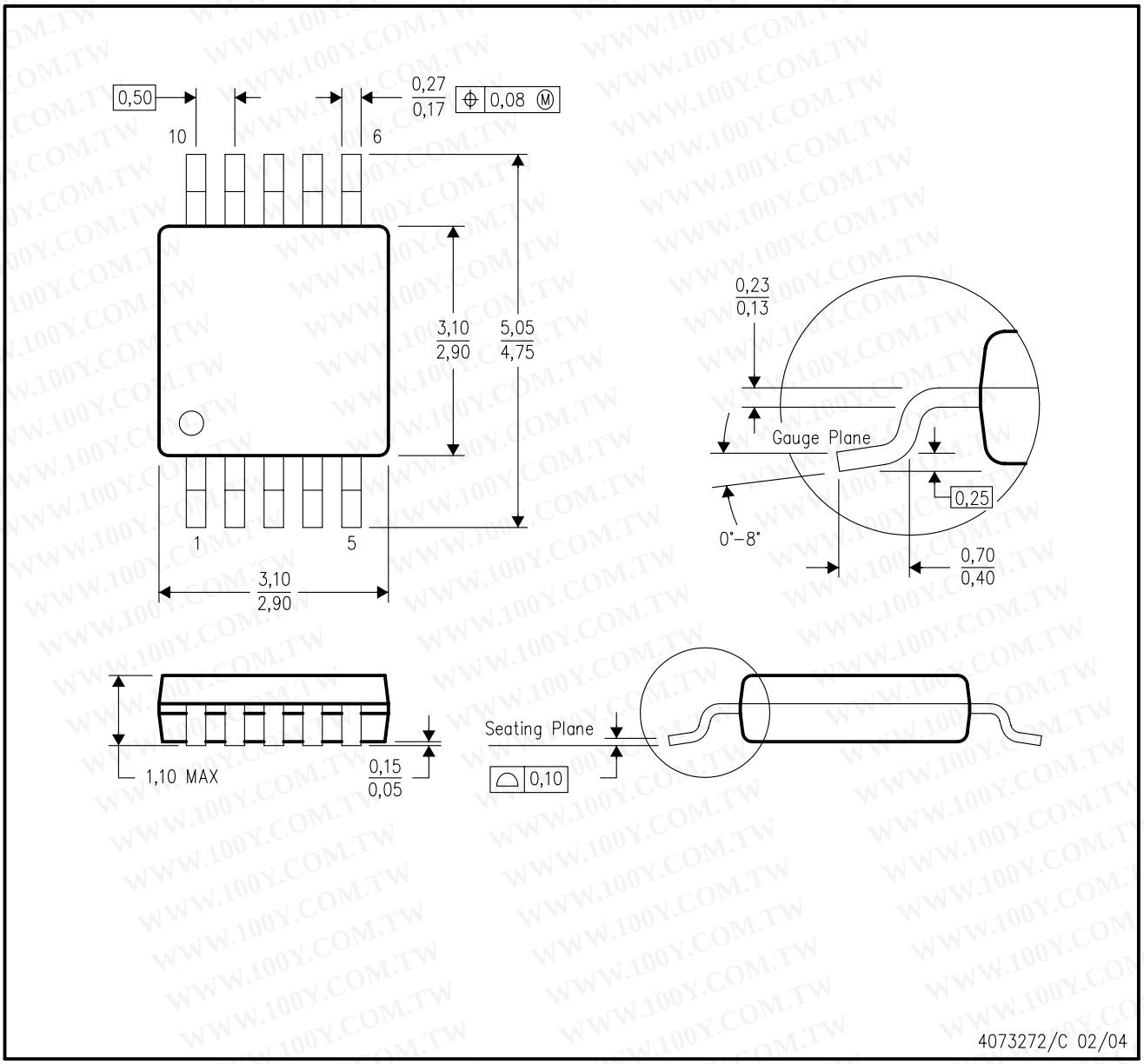

NOTES:
A. All linear dimensions are in millimeters.
B. This drawing is subject to change without notice.
C. Body dimensions do not include mold flash or protrusion.
D. Falls within JEDEC MO–187 variation BA.

DGS (S–PDSO–G10) PLASTIC SMALL OUTLINE PACKAGE

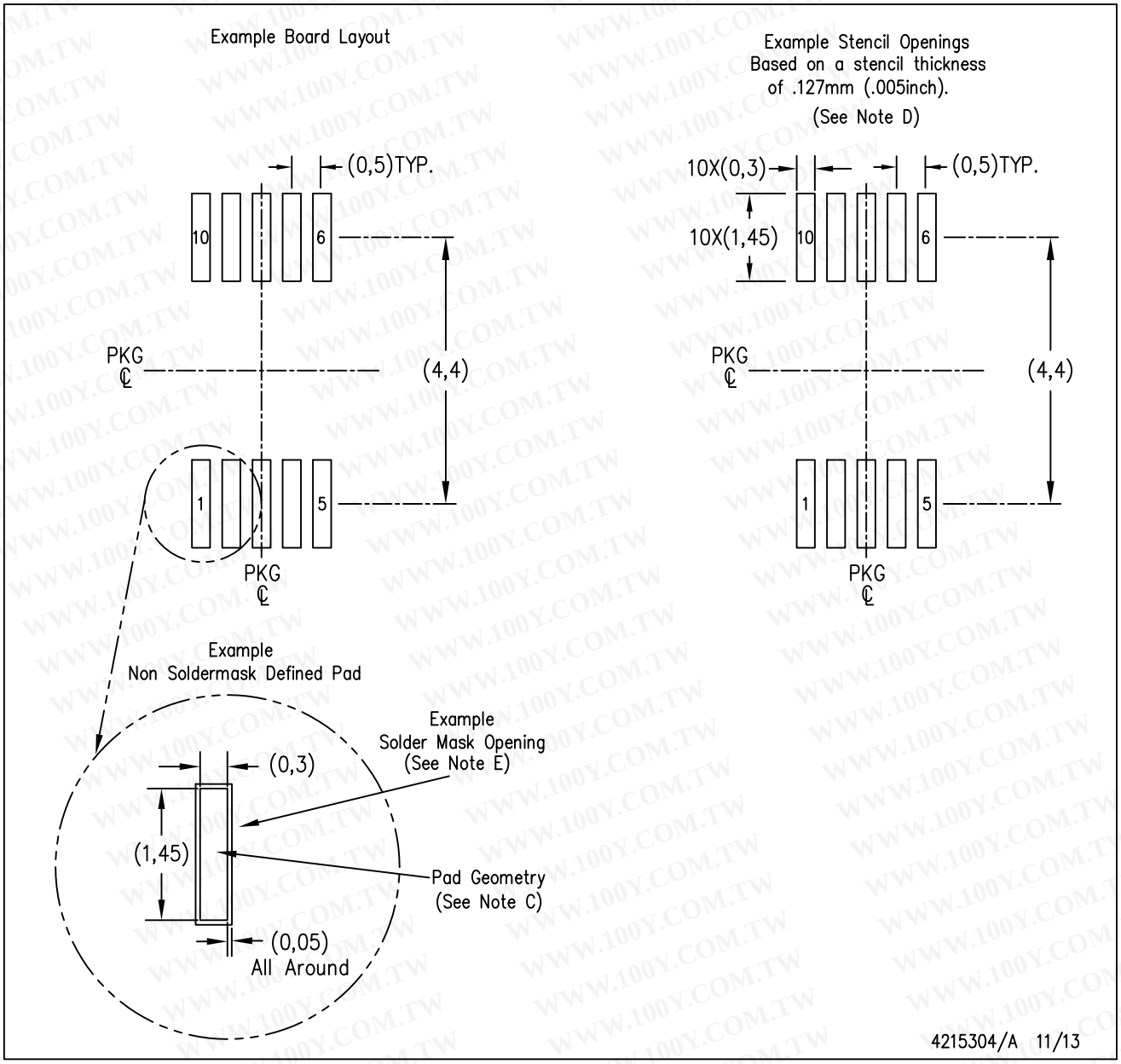

NOTES:
A. All linear dimensions are in millimeters.
B. This drawing is subject to change without notice.
C. Publication IPC–7351 is recommended for alternate designs.
D. Laser cutting apertures with trapezoidal walls and also rounding corners will offer better paste release. Customers should contact their board assembly site for stencil design recommendations. Refer to IPC–7525 for other stencil recommendations.
E. Customers should contact their board fabrication site for solder mask tolerances between and around signal pads.

勝 特 力 材 料 886-3-5753170
胜特力电子(上海) 86-21-34970699
胜特力电子(深圳) 86-755-83298787
Http://www.100y.com.tw

IMPORTANT NOTICE

Texas Instruments Incorporated and its subsidiaries (TI) reserve the right to make corrections, enhancements, improvements and other changes to its semiconductor products and services per JESD46, latest issue, and to discontinue any product or service per JESD48, latest issue. Buyers should obtain the latest relevant information before placing orders and should verify that such information is current and complete. All semiconductor products (also referred to herein as "components") are sold subject to TI's terms and conditions of sale supplied at the time of order acknowledgment.

TI warrants performance of its components to the specifications applicable at the time of sale, in accordance with the warranty in TI's terms and conditions of sale of semiconductor products. Testing and other quality control techniques are used to the extent TI deems necessary to support this warranty. Except where mandated by applicable law, testing of all parameters of each component is not necessarily performed.

TI assumes no liability for applications assistance or the design of Buyers' products. Buyers are responsible for their products and applications using TI components. To minimize the risks associated with Buyers' products and applications, Buyers should provide adequate design and operating safeguards.

TI does not warrant or represent that any license, either express or implied, is granted under any patent right, copyright, mask work right, or other intellectual property right relating to any combination, machine, or process in which TI components or services are used. Information published by TI regarding third-party products or services does not constitute a license to use such products or services or a warranty or endorsement thereof. Use of such information may require a license from a third party under the patents or other intellectual property of the third party, or a license from TI under the patents or other intellectual property of TI.

Reproduction of significant portions of TI information in TI data books or data sheets is permissible only if reproduction is without alteration and is accompanied by all associated warranties, conditions, limitations, and notices. TI is not responsible or liable for such altered documentation. Information of third parties may be subject to additional restrictions.

Resale of TI components or services with statements different from or beyond the parameters stated by TI for that component or service voids all express and any implied warranties for the associated TI component or service and is an unfair and deceptive business practice. TI is not responsible or liable for any such statements.

Buyer acknowledges and agrees that it is solely responsible for compliance with all legal, regulatory and safety-related requirements concerning its products, and any use of TI components in its applications, notwithstanding any applications-related information or support that may be provided by TI. Buyer represents and agrees that it has all the necessary expertise to create and implement safeguards which anticipate dangerous consequences of failures, monitor failures and their consequences, lessen the likelihood of failures that might cause harm and take appropriate remedial actions. Buyer will fully indemnify TI and its representatives against any damages arising out of the use of any TI components in safety-critical applications.

In some cases, TI components may be promoted specifically to facilitate safety-related applications. With such components, TI's goal is to help enable customers to design and create their own end-product solutions that meet applicable functional safety standards and requirements. Nonetheless, such components are subject to these terms.

No TI components are authorized for use in FDA Class III (or similar life-critical medical equipment) unless authorized officers of the parties have executed a special agreement specifically governing such use.

Only those TI components which TI has specifically designated as military grade or "enhanced plastic" are designed and intended for use in military/aerospace applications or environments. Buyer acknowledges and agrees that any military or aerospace use of TI components which have ***not*** been so designated is solely at the Buyer's risk, and that Buyer is solely responsible for compliance with all legal and regulatory requirements in connection with such use.

TI has specifically designated certain components as meeting ISO/TS16949 requirements, mainly for automotive use. In any case of use of non-designated products, TI will not be responsible for any failure to meet ISO/TS16949.

Products		**Applications**	
Audio	www.ti.com/audio	Automotive and Transportation	www.ti.com/automotive
Amplifiers	amplifier.ti.com	Communications and Telecom	www.ti.com/communications
Data Converters	dataconverter.ti.com	Computers and Peripherals	www.ti.com/computers
DLP® Products	www.dlp.com	Consumer Electronics	www.ti.com/consumer-apps
DSP	dsp.ti.com	Energy and Lighting	www.ti.com/energy
Clocks and Timers	www.ti.com/clocks	Industrial	www.ti.com/industrial
Interface	interface.ti.com	Medical	www.ti.com/medical
Logic	logic.ti.com	Security	www.ti.com/security
Power Mgmt	power.ti.com	Space, Avionics and Defense	www.ti.com/space-avionics-defense
Microcontrollers	microcontroller.ti.com	Video and Imaging	www.ti.com/video
RFID	www.ti-rfid.com		
OMAP Applications Processors	www.ti.com/omap	**TI E2E Community**	e2e.ti.com
Wireless Connectivity	www.ti.com/wirelessconnectivity		

Mailing Address: Texas Instruments, Post Office Box 655303, Dallas, Texas 75265
Copyright © 2013, Texas Instruments Incorporated