勝 特 力 材 料 886-3-5753170
胜特力电子(上海) 86-21-34970699
胜特力电子(深圳) 86-755-83298787
Http://www.100y.com.tw

	REVISION DESCRIPTION	CHECK	APP	DATE	REV.NOTICE.NO
△1					
△2					
△3					

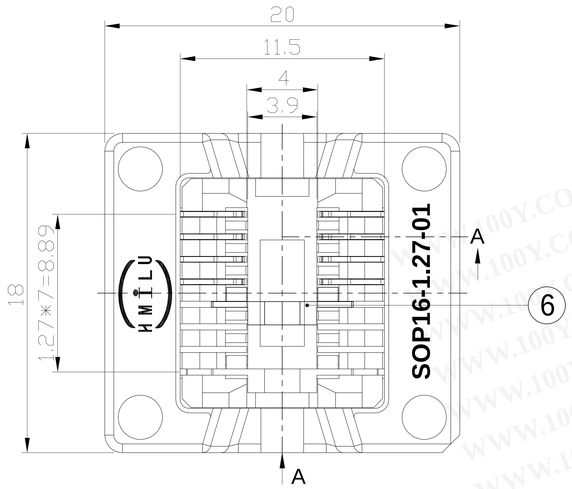

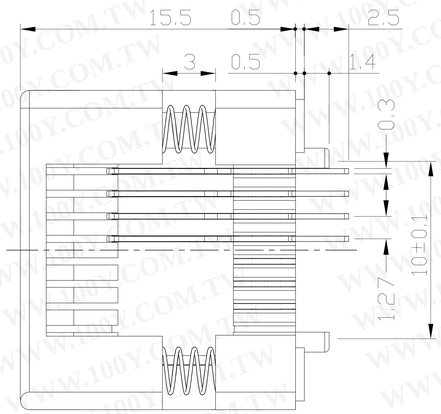

PCB PATTERN (TOP VIEW)

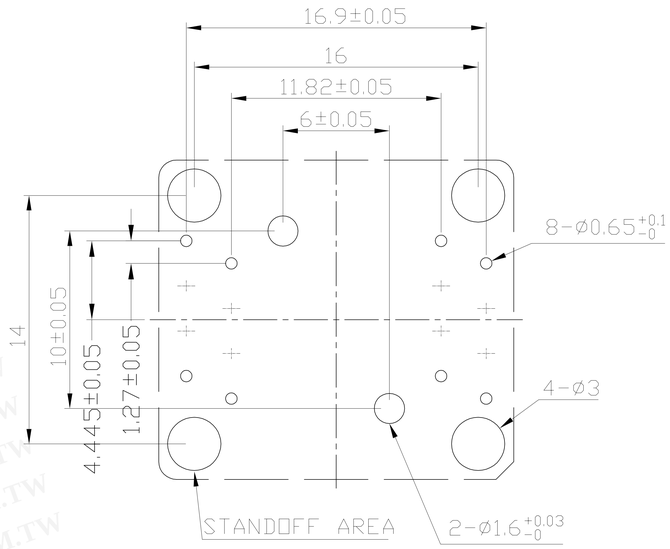

Insertion

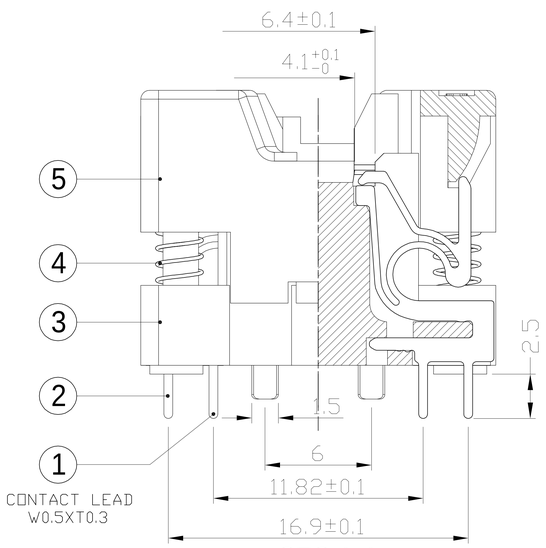

SEC.A-A

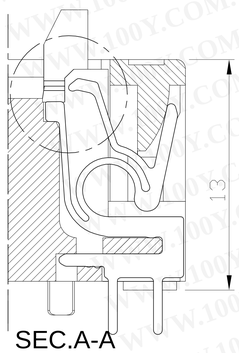

SEC.A-A
Contact Retracted

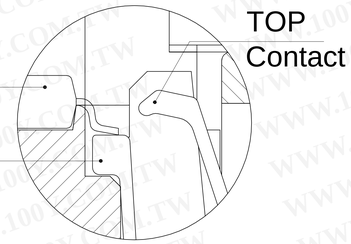

CONTAC TIP DETAIL

PERFORMANCE

1、Insulation Resistance: 1000mΩ Min.At DC 500V
2、Dielectric Withstanding Voltage For 1 Minute At AC 700V
3、Contact Resistance 30mΩ MAX。at 10mA and 20mV MAX.(Initial)
4、Current Rating: 1A max.
5、Operation Temperature -55°C ~+175°C
6、Life Span 15,000 Times (Mechanical)
7、Operation Force 1.0 Kg MAX

APPL ICABLE IC

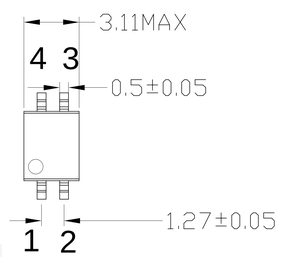

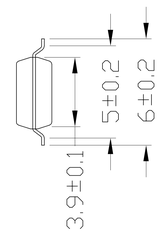

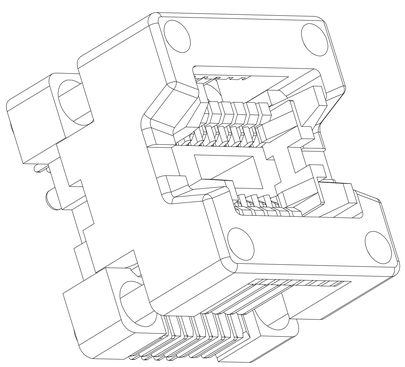

No	Part Number	Name	Material	Q/ty	Note
6	SOP-16-U01-003	ADAPTER	PEI/PES	1	BLACK
5	SOP-16-U01-002	COVER	PEI/PES	1	BLACK
4	30-B-4515X	SPRING	SUS	4	FOR COVER
3	SOP-16-U01-001	BASE	PEI/PES	1	BLACK
2	SOP-16-MSBR-02	CONTACT	BeCu	4	Au PLATING
1	SOP-16-MSBR-01	CONTACT	BeCu	4	Au PLATING

TOLERANCE	PROJECTION	GENERAL TOLERANCES	±0.10
		REV	A
X. ±0.50	DIMENSION: mm	SCALE:	1:1
X.X ±0.25	APP:	DATE:	
X.XX ±0.10	CHECK:	DATE:	
X.XXX ±0.05	DEGK: ENG02	DATE: 20150606	

TITLE	SOP16-1.27 SOCKET
CLASS	SOP4X2(16)-1.27-TP03NT
DRW.NO	SOP-8/16-1.27-S02

HMILU

	REVISION DESCRIPTION	CHECK	APP	DATE	REV.NOTICE.NO
△1					
△2					
△3					

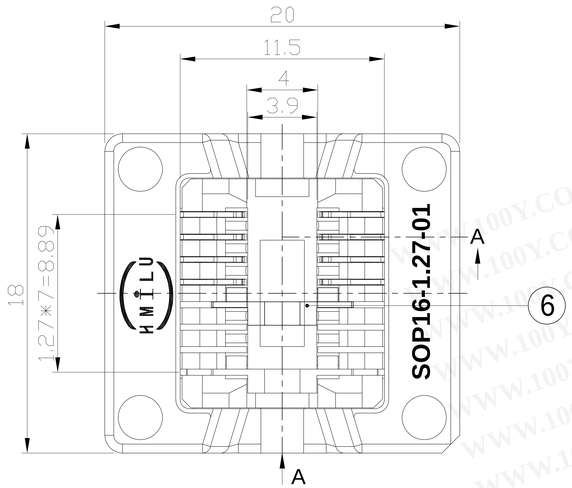

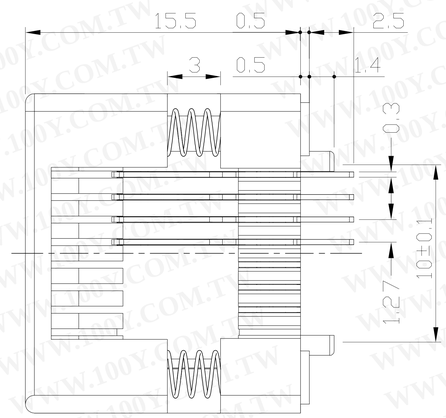

Insertion

PCB PATTERN (TOP VIEW)

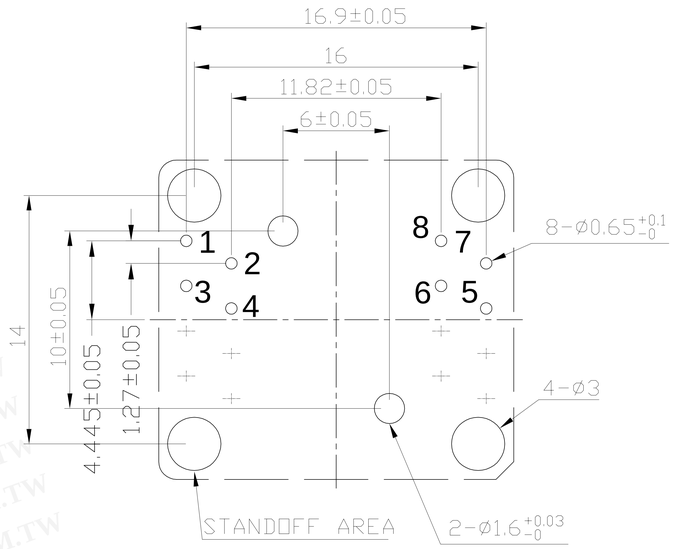

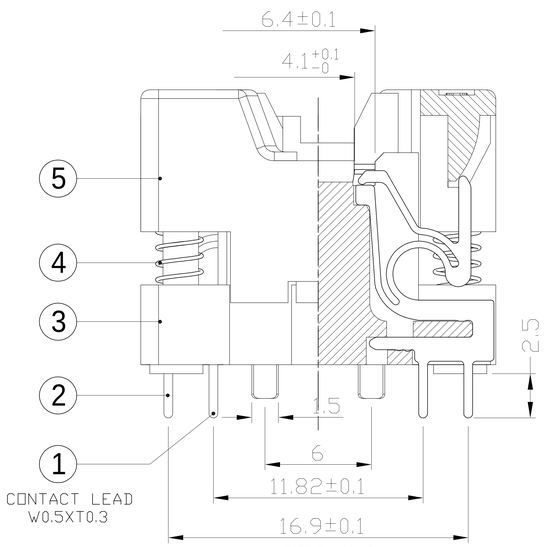

SEC.A-A

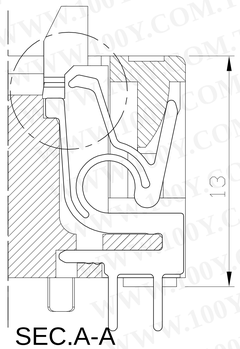

SEC.A-A
Contact Retracted

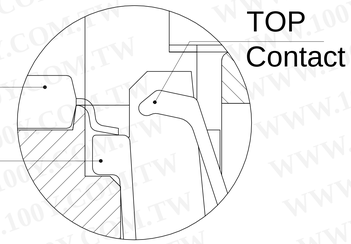

CONTAC TIP DETAIL

PERFORMANCE

1、Insulation Resistance: 1000mΩ Min.At DC 500V
2、Dielectric Withstanding Voltage For 1 Minute At AC 700V
3、Contact Resistance 30mΩ MAX。at 10mA and 20mV MAX.(Initial)
4、Current Rating: 1A max.
5、Operation Temperature -55°C ~+175°C
6、Life Span 15,000 Times (Mechanical)
7、Operation Force 1.0 Kg MAX

APPL ICABLE IC

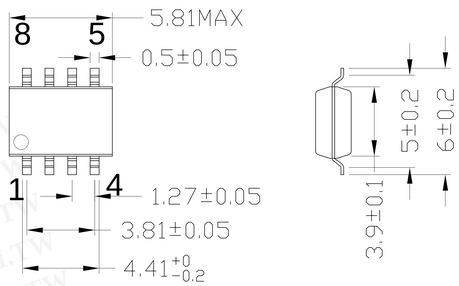

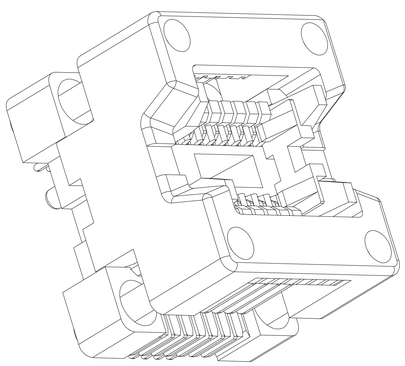

No	Part Number	Name	Material	Q/ty	Note
6	SOP-16-U01-003	ADAPTER	PEI/PES	1	BLACK
5	SOP-16-U01-002	COVER	PEI/PES	1	BLACK
4	30-B-4515X	SPRING	SUS	4	FOR COVER
3	SOP-16-U01-001	BASE	PEI/PES	1	BLACK
2	SOP-16-MSBR-02	CONTACT	BeCu	4	Au PLATING
1	SOP-16-MSBR-01	CONTACT	BeCu	4	Au PLATING

TOLERANCE	PROJECTION	GENERAL TOLERANCES	±0.10
		REV	A
X. ±0.50	DIMENSION: mm	SCALE:	1:1
X.X ±0.25	APP:	DATE:	
X.XX ±0.10	CHECK:	DATE:	
X.XXX ±0.05	DEGK: ENG02	DATE: 20150606	

TITLE	SOP16-1.27 SOCKET
CLASS	SOP8(16)-1.27-TP02NT
DRW.NO	SOP-8/16-1.27-S02

HMILU

WWW.100Y.COM.TW

	REVISION DESCRIPTION	CHECK	APP	DATE	REV.NOTICE.NO
△1					
△2					
△3					

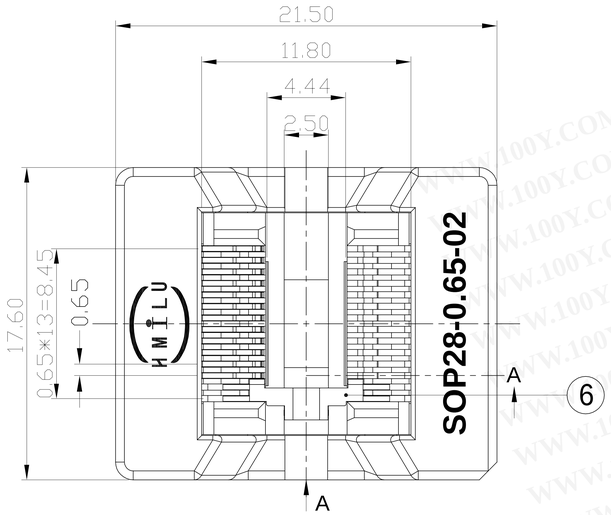

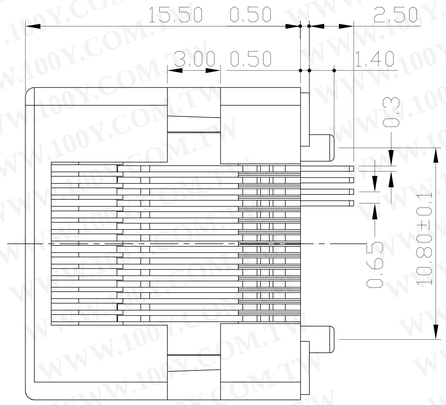

PCB PATTERN (TOP VIEW)

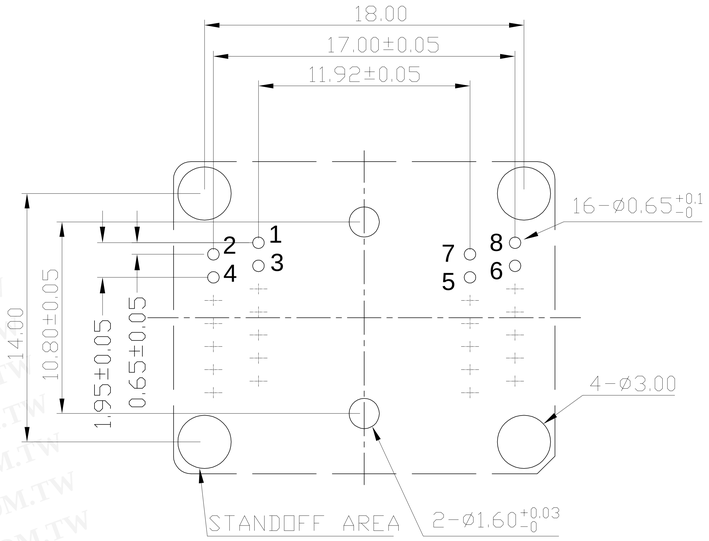

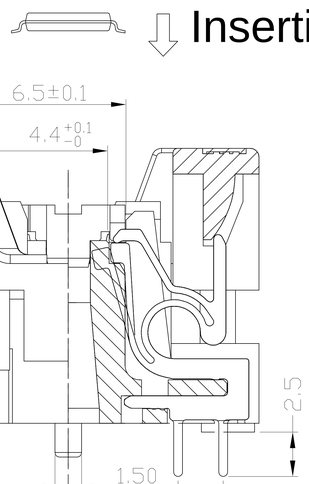

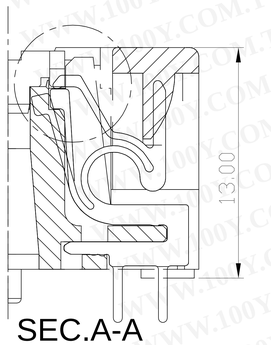

SEC.A-A
Contact Retracted

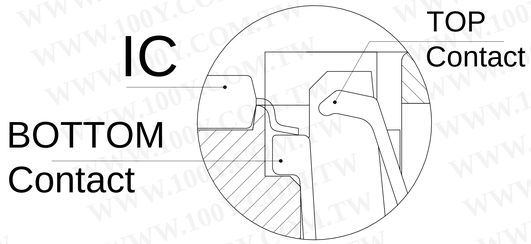

CONTAC TIP DETAIL

APPL ICABLE IC

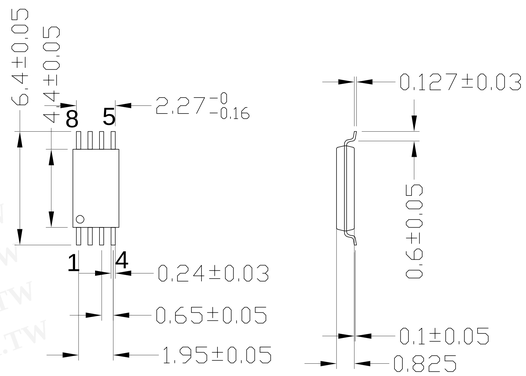

SEC.A-A

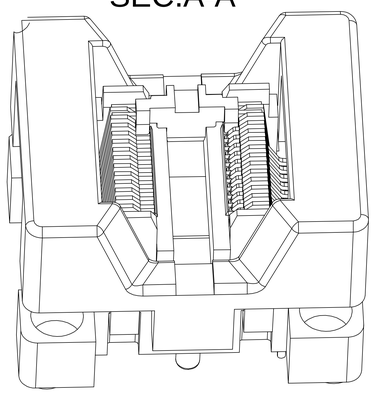

PERFORMANCE

1、Insulation Resistance: 1000mΩ Min.At DC 500V
2、Dielectric Withstanding Voltage For 1 Minute At AC 700V
3、Contact Resistance 30mΩ MAX。at 10mA and 20mV MAX.(Initial)
4、Current Rating: 1A max.
5、Operation Temperature -55°C ~+175°C
6、Life Span 15,000 Times (Mechanical)
7、Operation Force 1.0 Kg MAX

No	Part Number	Name	Material	Q/ty	Note
6	SOP-28-U01-003	ADAPTER	PEI/PES	1	BLACK
5	SOP-28-U01-002	COVER	PEI/PES	1	BLACK
4	30-B-4515X	SPRING	SUS	4	FOR COVER
3	SOP-28-U01-001	BASE	PEI/PES	1	BLACK
2	SOP-28-MSBR-02	CONTACT	BeCu	4	Au PLATING
1	SOP-28-MSBR-01	CONTACT	BeCu	4	Au PLATING

TOLERANCE	PROJECTION	GENERAL TOLERANCES	±0.10	TITLE	SOP28-0.65 SOCKET
		REV	A	CLASS	SOP8(28)-0.65-TP03NT
X. ±0.50	DIMENSION: mm	SCALE:	1:1	DRW.NO	SOP-8/14/16/20/24/28-0.65-M02
X.X ±0.25	APP:	DATE:			
X.XX ±0.10	CHECK:	DATE:			
X.XXX ±0.05	DEGK: ENG02	DATE: 20150727			

HMILU

WWW.100Y.COM.TW

	REVISION DESCRIPTION	CHECK	APP	DATE	REV.NOTICE.NO
△1					
△2					
△3					

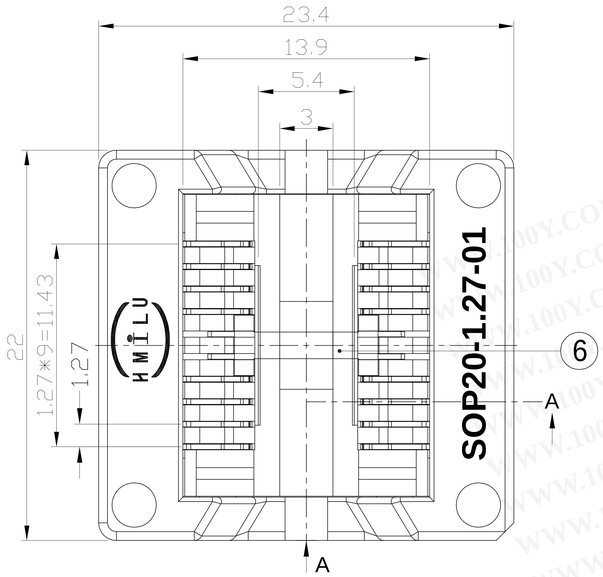

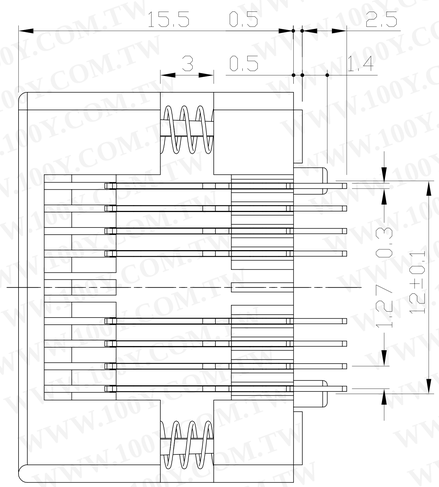

PCB PATTERN (TOP VIEW)

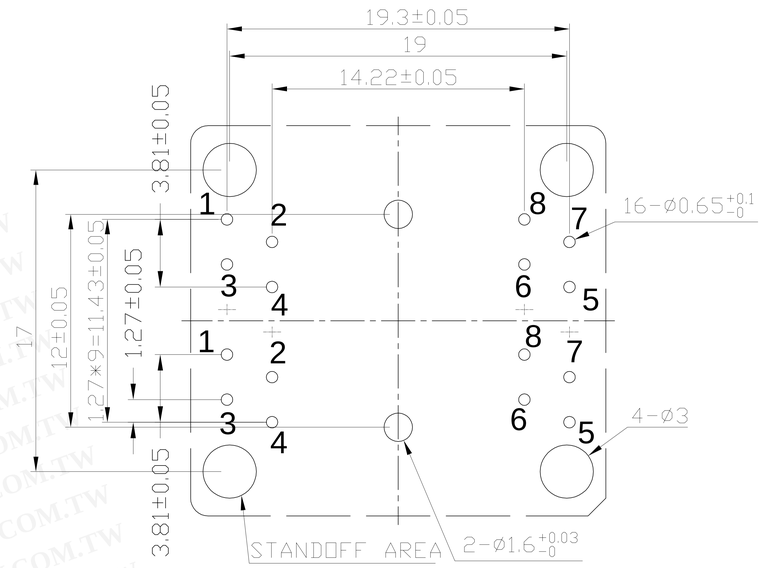

Insertion

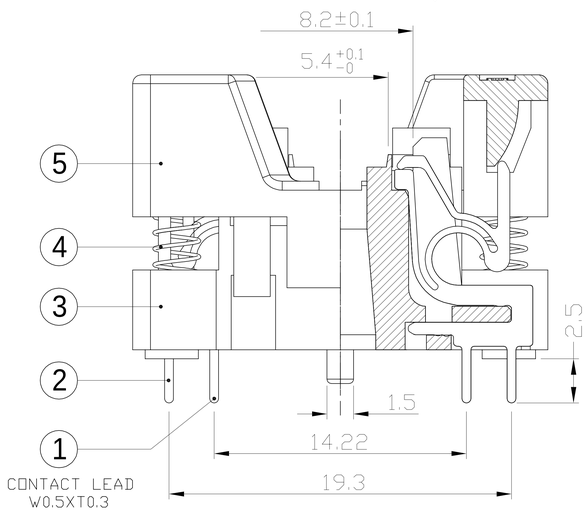

SEC.A-A

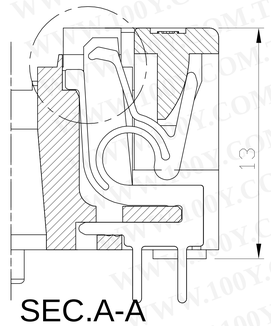

SEC.A-A
Contact Retracted

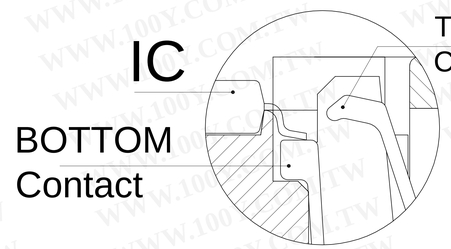

CONTAC TIP DETAIL

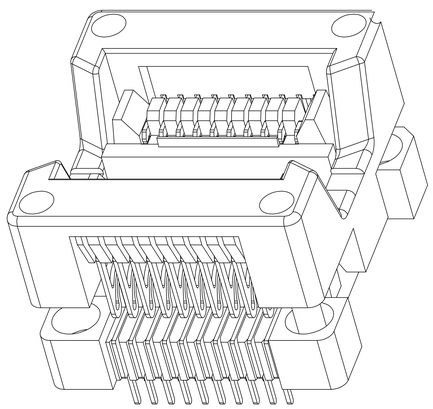

PERFORMANCE

1、Insulation Resistance: 1000mΩ Min.At DC 500V
2、Dielectric Withstanding Voltage For 1 Minute At AC 700V
3、Contact Resistance 30mΩ MAX。at 10mA and 20mV MAX.(Initial)
4、Current Rating: 1A max.
5、Operation Temperature -55°C ~+175°C
6、Life Span 15,000 Times (Mechanical)
7、Operation Force 1.0 Kg MAX

APPL ICABLE IC

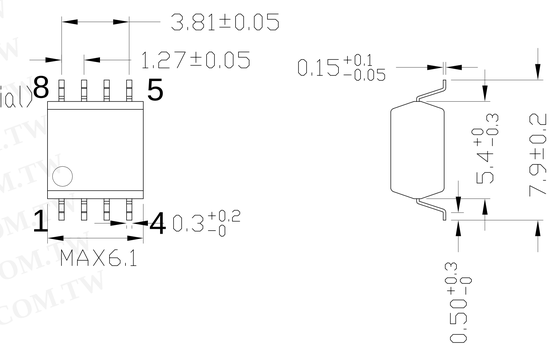

No	Part Number	Name	Material	Q/ty	Note
6	SOP-20-U01-003	ADAPTER	PEI/PES	1	BLACK
5	SOP-20-U01-002	COVER	PEI/PES	1	BLACK
4	30-B-4515X	SPRING	SUS	4	FOR COVER
3	SOP-20-U01-001	BASE	PEI/PES	1	BLACK
2	SOP-20-MSBR-02	CONTACT	BeCu	8	Au PLATING
1	SOP-20-MSBR-01	CONTACT	BeCu	8	Au PLATING

TOLERANCE	PROJECTION	GENERAL TOLERANCES	±0.10	TITLE	SOP20-1.27 SOCKET
		REV	A	CLASS	SOP8X2(20)-1.27-TP02NT
X. ±0.50	DIMENSION: mm	SCALE:	1:1	DRW.NO	SOP-14/16/20-1.27-M02
X.X ±0.25	APP:	DATE:			
X.XX ±0.10	CHECK:	DATE:			
X.XXX ±0.05	DEGK: ENG02	DATE: 20150606			

HMILU

WWW.100Y.COM.TW

	REVISION DESCRIPTION	CHECK	APP	DATE	REV.NOTICE.NO
△1					
△2					
△3					

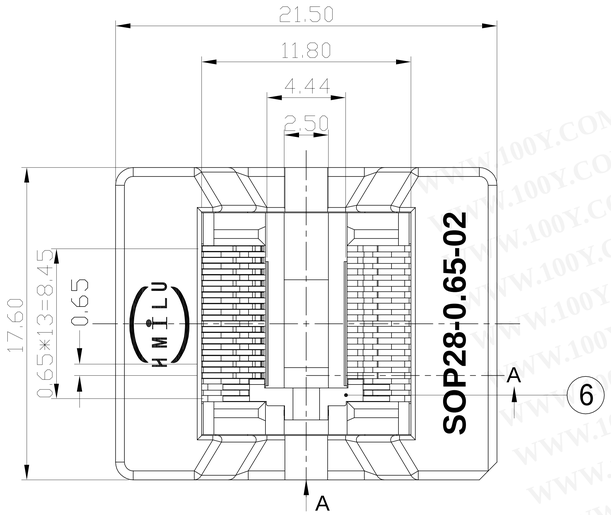

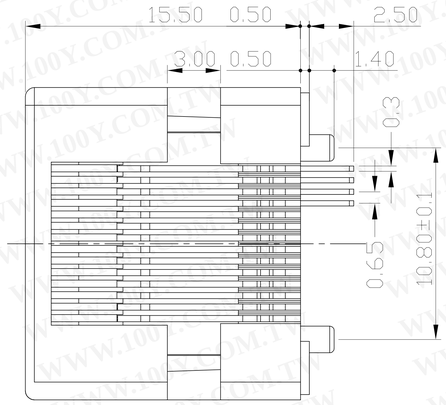

PCB PATTERN (TOP VIEW)

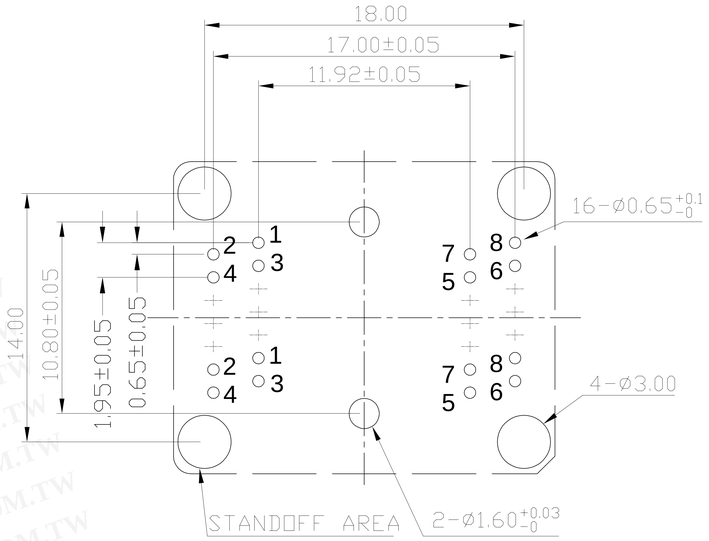

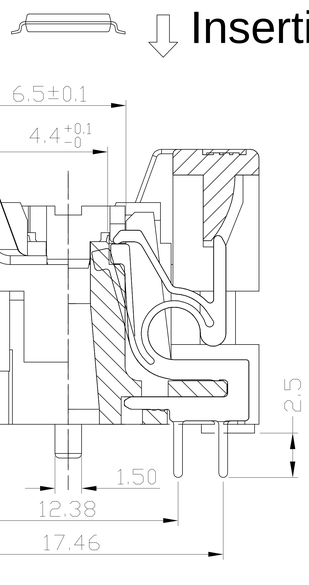

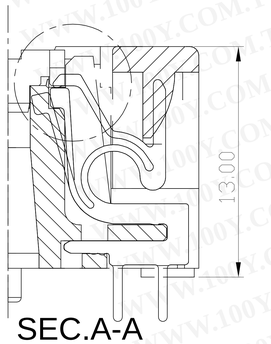

SEC.A-A
Contact Retracted

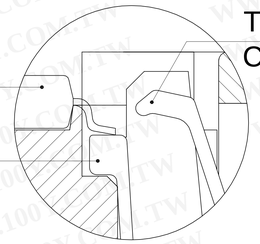

CONTAC TIP DETAIL

APPL ICABLE IC

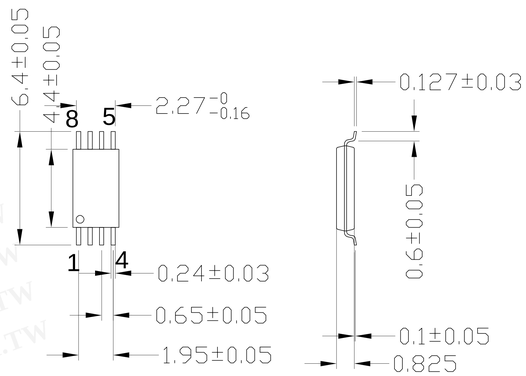

PERFORMANCE

1、Insulation Resistance: 1000mΩ Min.At DC 500V
2、Dielectric Withstanding Voltage For 1 Minute At AC 700V
3、Contact Resistance 30mΩ MAX。at 10mA and 20mV MAX.(Initial)
4、Current Rating: 1A max.
5、Operation Temperature -55°C ~+175°C
6、Life Span 15,000 Times (Mechanical)
7、Operation Force 1.0 Kg MAX

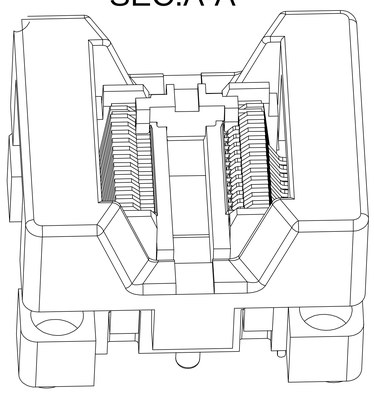

SEC.A-A

No	Part Number	Name	Material	Q/ty	Note
6	SOP-28-U01-003	ADAPTER	PEI/PES	1	BLACK
5	SOP-28-U01-002	COVER	PEI/PES	1	BLACK
4	30-B-4515X	SPRING	SUS	4	FOR COVER
3	SOP-28-U01-001	BASE	PEI/PES	1	BLACK
2	SOP-28-MSBR-02	CONTACT	BeCu	8	Au PLATING
1	SOP-28-MSBR-01	CONTACT	BeCu	8	Au PLATING

TOLERANCE	PROJECTION	GENERAL TOLERANCES	±0.10
		REV	A
X. ±0.50	DIMENSION: mm	SCALE: 1:1	
X.X ±0.25	APP:	DATE:	
X.XX ±0.10	CHECK:	DATE:	
X.XXX ±0.05	DEGK: ENG03	DATE: 20160702	

TITLE	SOP28-0.65 SOCKET
CLASS	SOP8*2(28)-0.65-TP01NT
DRW.NO	SOP-8/14/16/20/24/28-0.65-M01

HMILU

WWW.100Y.COM.TW

	REVISION DESCRIPTION	CHECK	APP	DATE	REV.NOTICE.NO
△1					
△2					
△3					

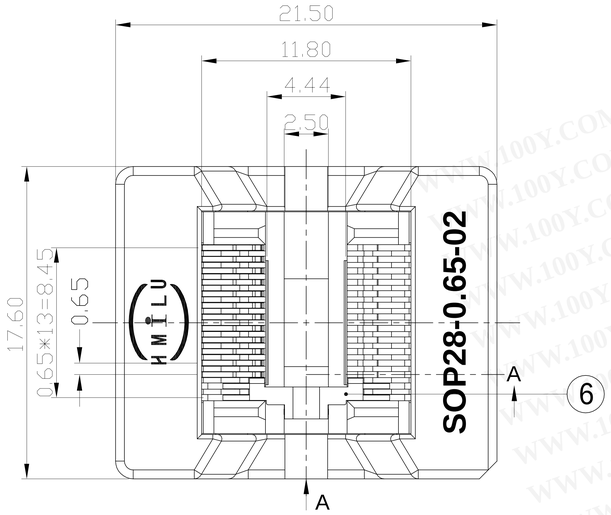

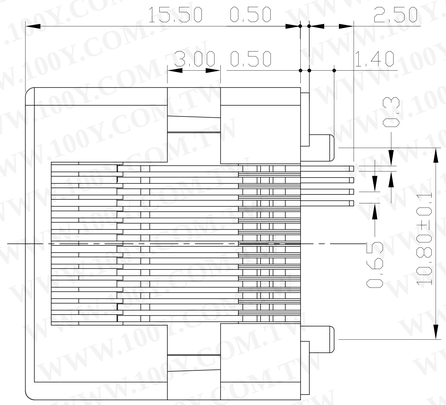

PCB PATTERN (TOP VIEW)

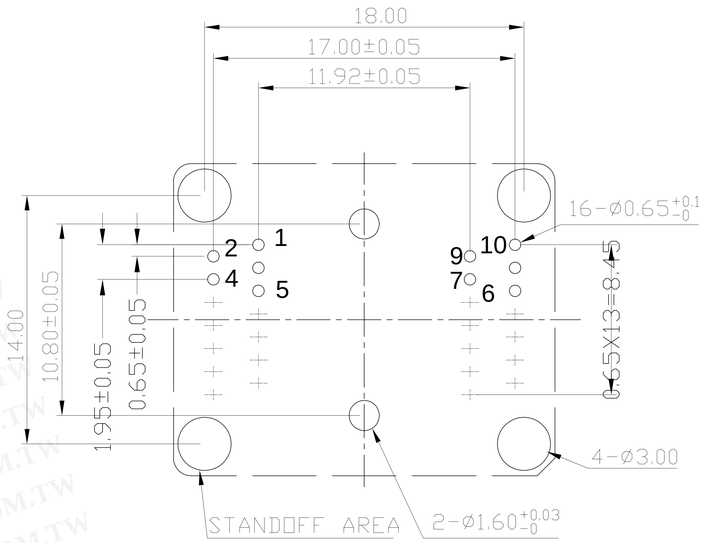

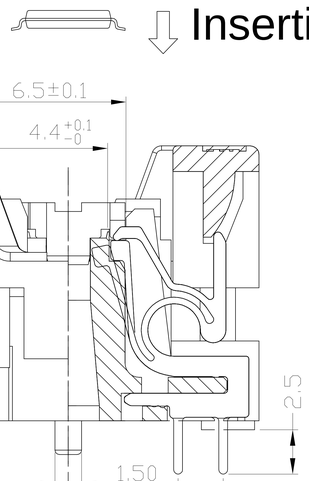

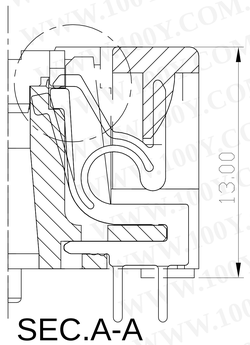

SEC.A-A
Contact Retracted

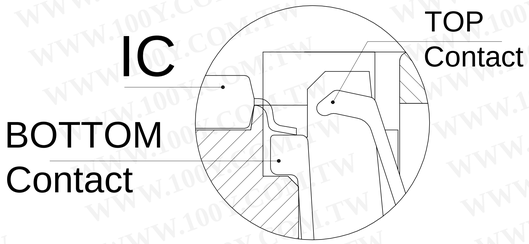

CONTAC TIP DETAIL

PERFORMANCE

1、Insulation Resistance: 1000mΩ Min.At DC 500V
2、Dielectric Withstanding Voltage For 1 Minute At AC 700V
3、Contact Resistance 30mΩ MAX。at 10mA and 20mV MAX.(Initial)
4、Current Rating: 1A max.
5、Operation Temperature -55°C ~+175°C
6、Life Span 15,000 Times (Mechanical)
7、Operation Force 1.0 Kg MAX

APPL ICABLE IC

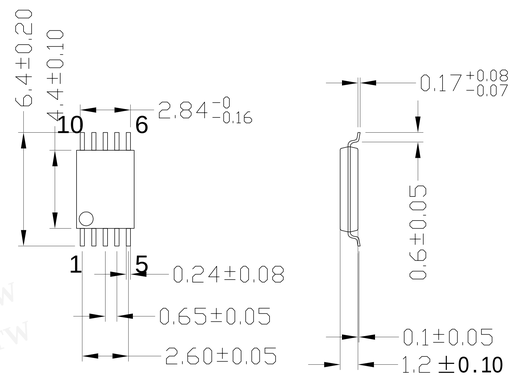

SEC.A-A

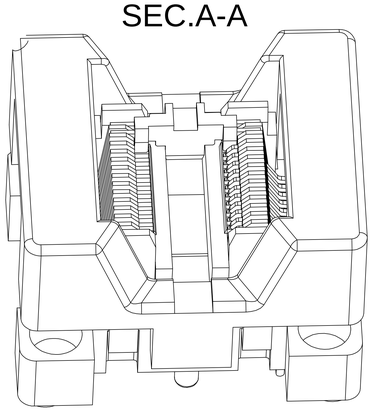

No	Part Number	Name	Material	Q/ty	Note
6	SOP-28-U01-003	ADAPTER	PEI/PES	1	BLACK
5	SOP-28-U01-002	COVER	PEI/PES	1	BLACK
4	30-B-4515X	SPRING	SUS	4	FOR COVER
3	SOP-28-U01-001	BASE	PEI/PES	1	BLACK
2	SOP-28-MSBR-02	CONTACT	BeCu	5	Au PLATING
1	SOP-28-MSBR-01	CONTACT	BeCu	5	Au PLATING

TOLERANCE	PROJECTION	GENERAL TOLERANCES	±0.10
		REV	A
X. ±0.50	DIMENSION: mm	SCALE: 1:1	
X.X ±0.25	APP:	DATE:	
X.XX ±0.10	CHECK:	DATE:	
X.XXX ±0.05	DEGK: ENG04	DATE: 20150727	

TITLE	SOP28-0.65 SOCKET
CLASS	SOP10(28)-0.65-TP07NT
DRW.NO	SOP-8/10/14/16/20/24/28-0.65-M02

HMILU

WWW.100Y.COM.TW

	REVISION DESCRIPTION	CHECK	APP	DATE	REV.NOTICE.NO
△1					
△2					
△3					

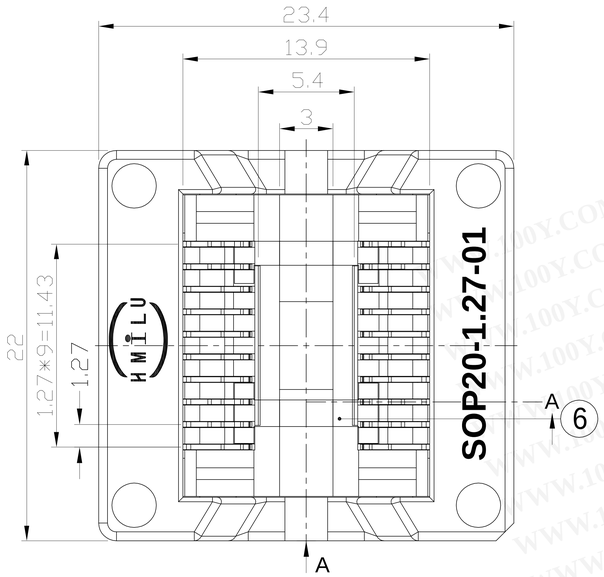

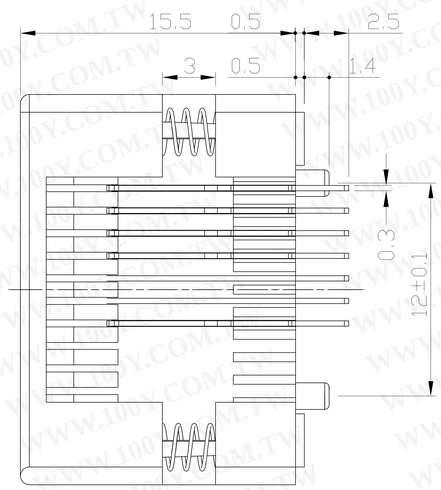

PCB PATTERN (TOP VIEW)

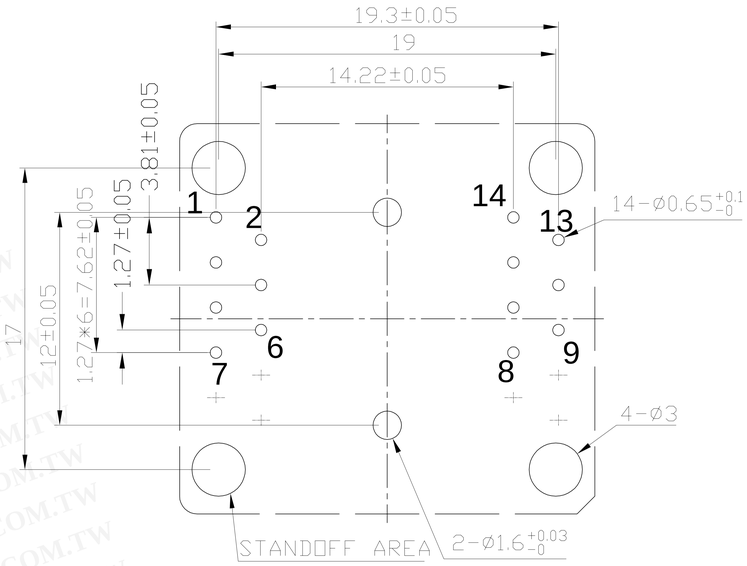

Insertion

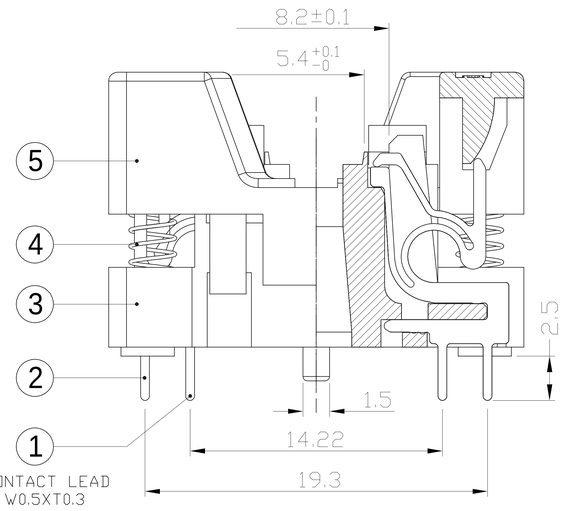

SEC.A-A

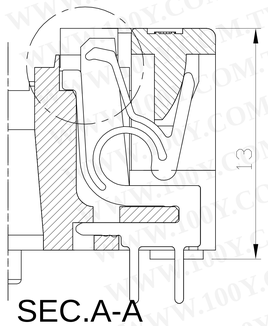

SEC.A-A
Contact Retracted

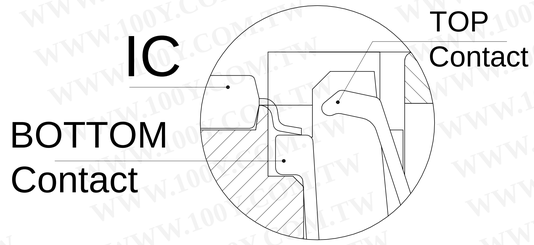

CONTAC TIP DETAIL

PERFORMANCE

1、Insulation Resistance: 1000mΩ Min.At DC 500V
2、Dielectric Withstanding Voltage For 1 Minute At AC 700V
3、Contact Resistance 30mΩ MAX。at 10mA and 20mV MAX.(Initial)
4、Current Rating: 1A max.
5、Operation Temperature -55°C ~+175°C
6、Life Span 15,000 Times (Mechanical)
7、Operation Force 1.0 Kg MAX

APPL ICABLE IC

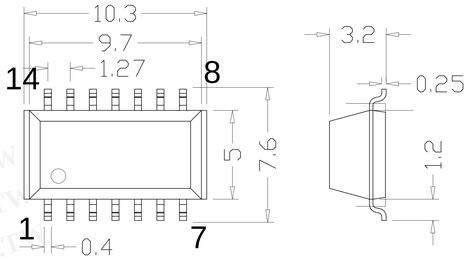

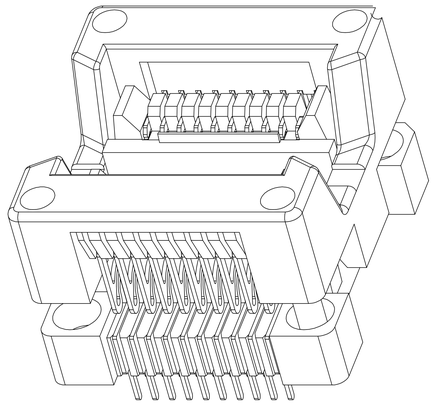

No	Part Number	Name	Material	Q/ty	Note
6	SOP-20-U01-003	ADAPTER	PEI/PES	1	BLACK
5	SOP-20-U01-002	COVER	PEI/PES	1	BLACK
4	30-B-4515X	SPRING	SUS	4	FOR COVER
3	SOP-20-U01-001	BASE	PEI/PES	1	BLACK
2	SOP-20-MSBR-02	CONTACT	BeCu	7	Au PLATING
1	SOP-20-MSBR-01	CONTACT	BeCu	7	Au PLATING

TOLERANCE	PROJECTION		GENERAL TOLERANCES	±0.10	TITLE: SOP20-1.27 SOCKET
			REV	A	CLASS: SOP14(20)-1.27-TP03NT
X. ±0.50	DIMENSION: mm		SCALE: 1:1		DRW.NO: SOP-14/16/20-1.27-M03
X.X ±0.25	APP:		DATE:		
X.XX ±0.10	CHECK:		DATE:		
X.XXX ±0.05	DEGK: ENG02		DATE: 20150606		

HMILU

WWW.100Y.COM.TW

	REVISION DESCRIPTION	CHECK	APP	DATE	REV.NOTICE.NO
△1					
△2					
△3					

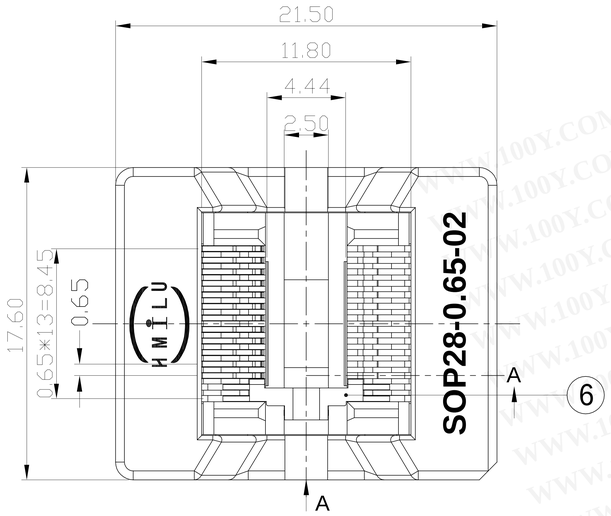

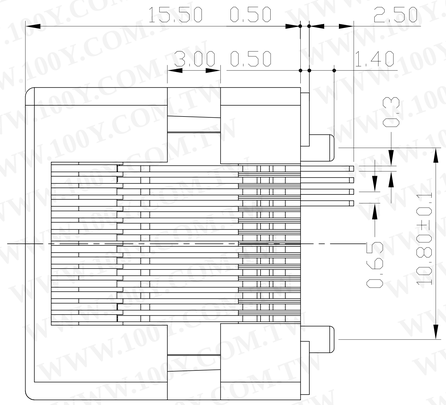

PCB PATTERN (TOP VIEW)

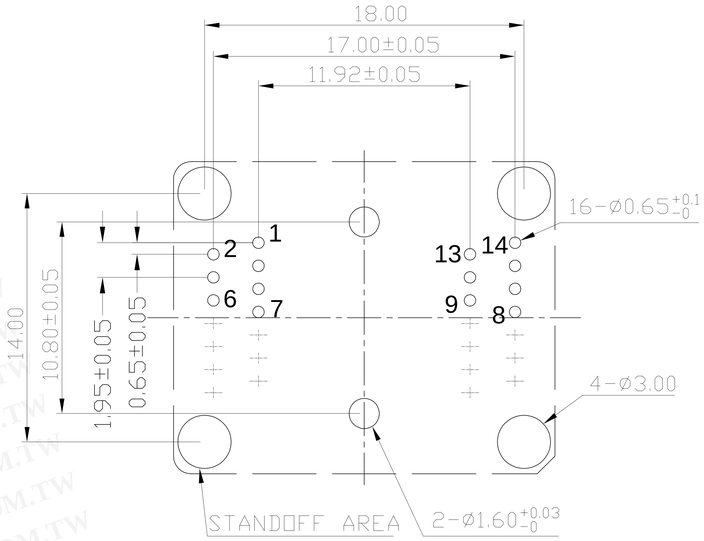

Insertion

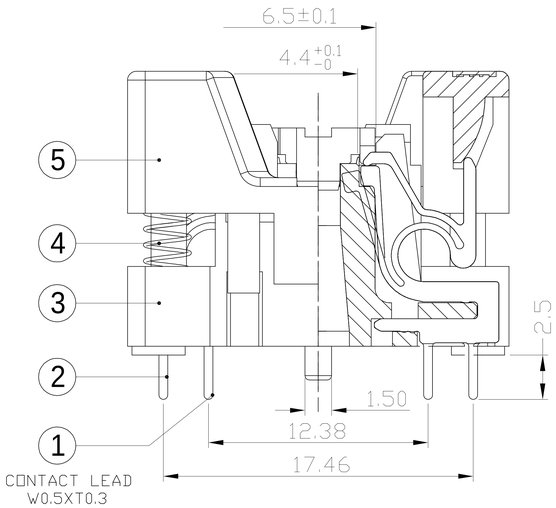

SEC.A-A

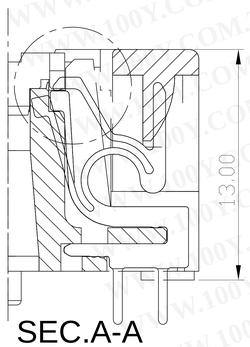

SEC.A-A
Contact Retracted

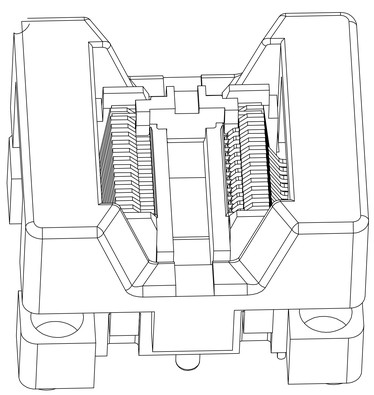

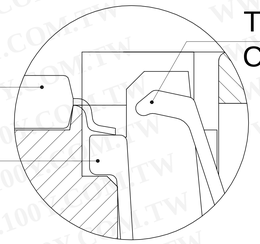

CONTAC TIP DETAIL

PERFORMANCE

1、Insulation Resistance: 1000mΩ Min.At DC 500V
2、Dielectric Withstanding Voltage For 1 Minute At AC 700V
3、Contact Resistance 30mΩ MAX。at 10mA and 20mV MAX.(Initial)
4、Current Rating: 1A max.
5、Operation Temperature -55°C ~+175°C
6、Life Span 15,000 Times (Mechanical)
7、Operation Force 1.0 Kg MAX

APPL ICABLE IC

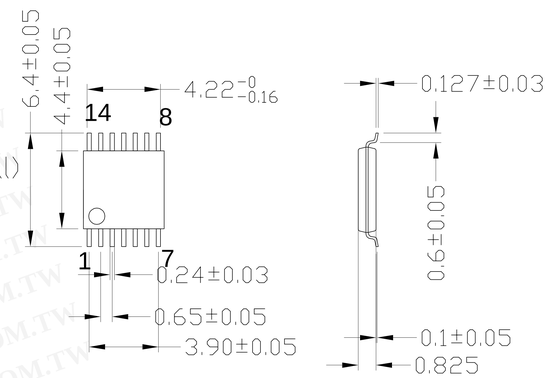

No	Part Number	Name	Material	Q/ty	Note
6	SOP-28-U01-003	ADAPTER	PEI/PES	1	BLACK
5	SOP-28-U01-002	COVER	PEI/PES	1	BLACK
4	30-B-4515X	SPRING	SUS	4	FOR COVER
3	SOP-28-U01-001	BASE	PEI/PES	1	BLACK
2	SOP-28-MSBR-02	CONTACT	BeCu	7	Au PLATING
1	SOP-28-MSBR-01	CONTACT	BeCu	7	Au PLATING

TOLERANCE	PROJECTION	GENERAL TOLERANCES	±0.10
		R E V	A
X. ± 0.50	DIMENSION: mm	SCALE: 1:1	
X.X ± 0.25	APP:	DATE:	
X.XX ± 0.10	CHECK:	DATE:	
X.XXX ± 0.05	DEGK: ENG02	DATE: 20150727	

TITLE	SOP28-0.65 SOCKET
CLASS	SOP14(28)-0.65-TP05NT
DRW.NO	SOP-8/14/16/20/24/28-0.65-M02

HMILU

WWW.100Y.COM.TW

	REVISION DESCRIPTION	CHECK	APP	DATE	REV.NOTICE.NO
△1					
△2					
△3					

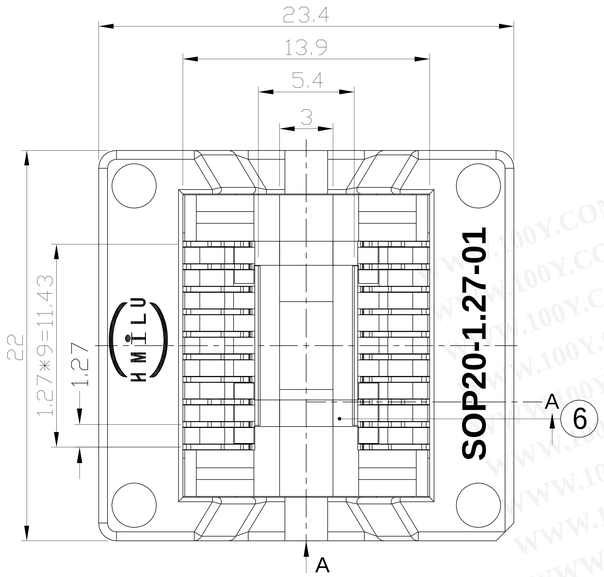

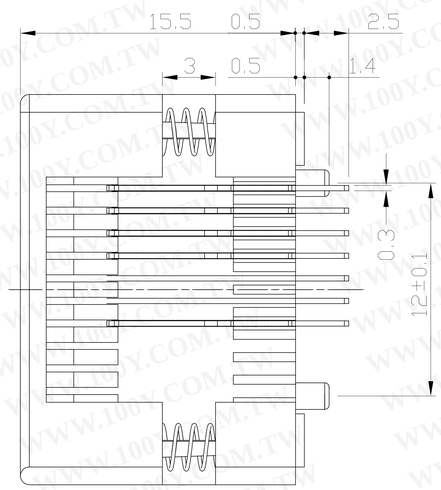

PCB PATTERN (TOP VIEW)

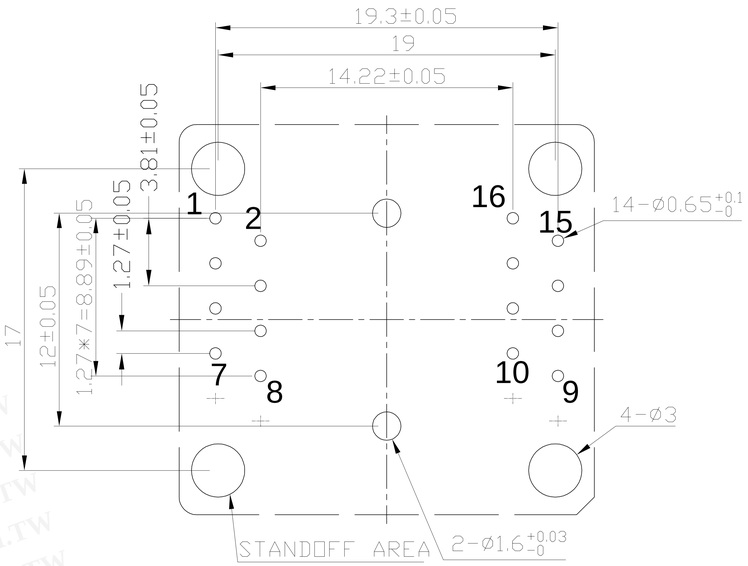

Insertion

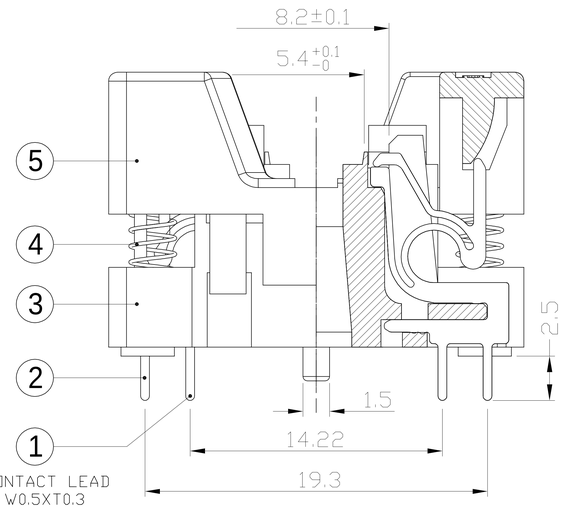

SEC.A-A

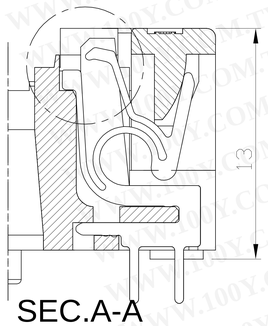

SEC.A-A
Contact Retracted

IC

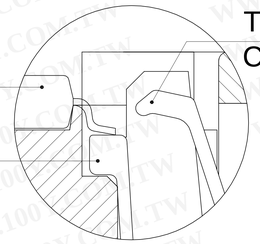

CONTAC TIP DETAIL

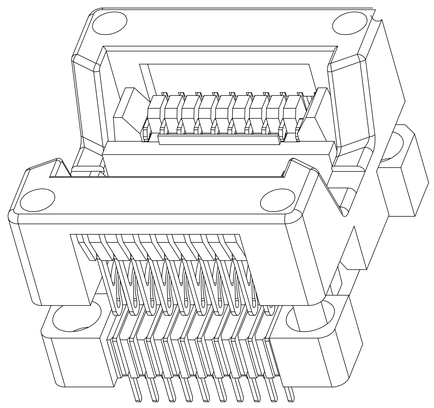

PERFORMANCE

1、Insulation Resistance: 1000mΩ Min.At DC 500V
2、Dielectric Withstanding Voltage For 1 Minute At AC 700V
3、Contact Resistance 30mΩ MAX。at 10mA and 20mV MAX.(Initial)
4、Current Rating: 1A max.
5、Operation Temperature -55°C ~+175°C
6、Life Span 15,000 Times (Mechanical)
7、Operation Force 1.0 Kg MAX

APPL ICABLE IC

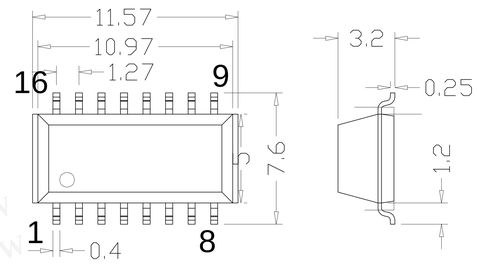

No	Part Number	Name	Material	Q/ty	Note
6	SOP-20-U01-003	ADAPTER	PEI/PES	1	BLACK
5	SOP-20-U01-002	COVER	PEI/PES	1	BLACK
4	30-B-4515X	SPRING	SUS	4	FOR COVER
3	SOP-20-U01-001	BASE	PEI/PES	1	BLACK
2	SOP-20-MSBR-02	CONTACT	BeCu	8	Au PLATING
1	SOP-20-MSBR-01	CONTACT	BeCu	8	Au PLATING

TOLERANCE	PROJECTION		GENERAL TOLERANCES	±0.10	TITLE: SOP20-1.27 SOCKET
			R E V	A	CLASS: SOP16(20)-1.27-TP04NT
X. ±0.50	DIMENSION: mm		SCALE: 1:1		DRW.NO: SOP-14/16/20-1.27-M03
X.X ±0.25	APP:		DATE:		
X.XX ±0.10	CHECK:		DATE:		
X.XXX ±0.05	DEGK: ENG02		DATE: 20150606		

HMILU

WWW.100Y.COM.TW

	REVISION DESCRIPTION	CHECK	APP	DATE	REV.NOTICE.NO
△1					
△2					
△3					

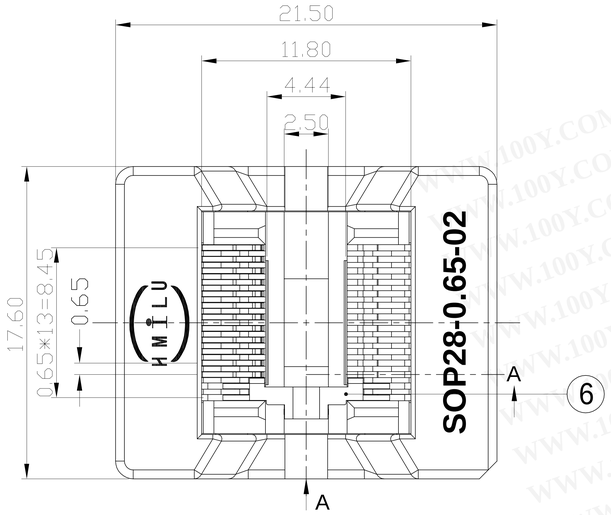

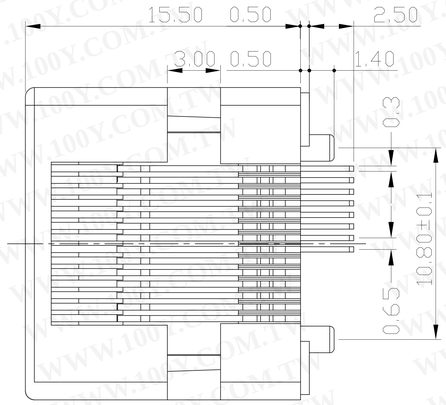

PCB PATTERN (TOP VIEW)

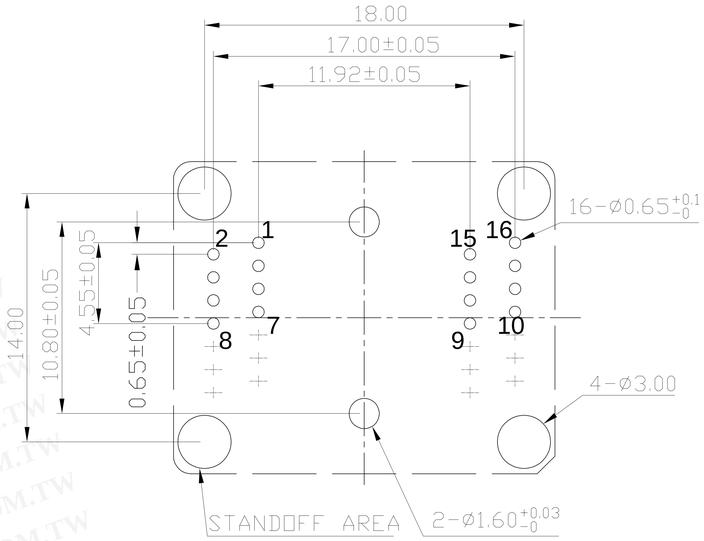

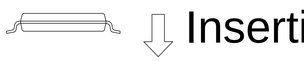

Insertion

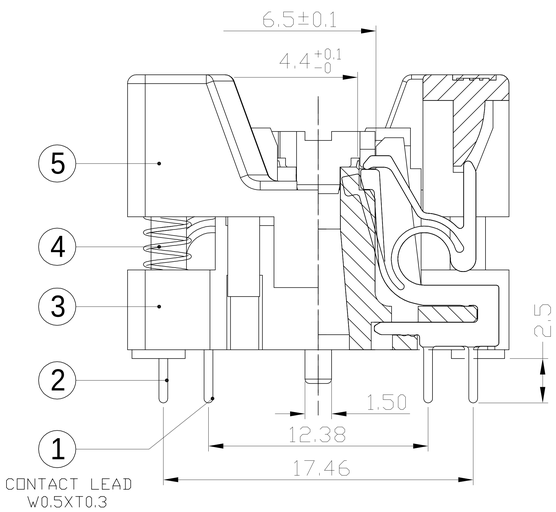

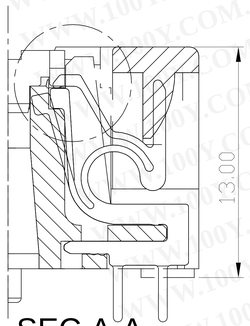

SEC.A-A
Contact Retracted

SEC.A-A

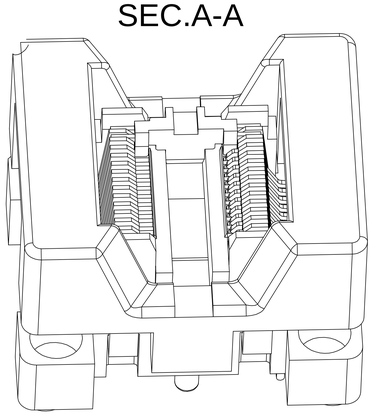

IC

BOTTOM
Contact

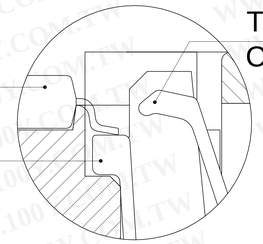

CONTAC TIP DETAIL

PERFORMANCE

1、Insulation Resistance: 1000mΩ Min.At DC 500V
2、Dielectric Withstanding Voltage For 1 Minute At AC 700V
3、Contact Resistance 30mΩ MAX。at 10mA and 20mV MAX.(Initial)
4、Current Rating: 1A max.
5、Operation Temperature -55°C ~+175°C
6、Life Span 15,000 Times (Mechanical)
7、Operation Force 1.0 Kg MAX

APPL ICABLE IC

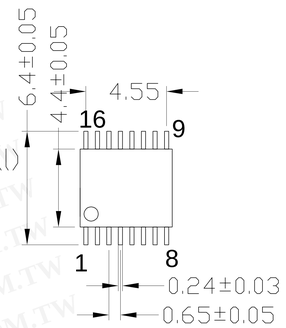

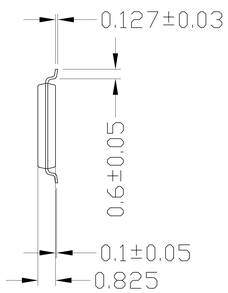

No	Part Number	Name	Material	Q/ty	Note
6	SOP-28-U01-003	ADAPTER	PEI/PES	1	BLACK
5	SOP-28-U01-002	COVER	PEI/PES	1	BLACK
4	30-B-4515X	SPRING	SUS	4	FOR COVER
3	SOP-28-U01-001	BASE	PEI/PES	1	BLACK
2	SOP-28-MSBR-02	CONTACT	BeCu	8	Au PLATING
1	SOP-28-MSBR-01	CONTACT	BeCu	8	Au PLATING

TOLERANCE	PROJECTION		GENERAL TOLERANCES	±0.10	TITLE: SOP28-0.65 SOCKET
			R E V	A	CLASS: SOP16(28)-0.65-TP02NT
X. ± 0.50	DIMENSION: mm		SCALE: 1:1		DRW.NO: SOP-8/14/16/20/24/28-0.65-M02
X.X ± 0.25	APP:		DATE:		HMILU
X.XX ± 0.10	CHECK:		DATE:		
X.XXX ± 0.05	DEGK: ENG02		DATE: 20150727		

WWW.100Y.COM.TW

	REVISION DESCRIPTION	CHECK	APP	DATE	REV.NOTICE.NO
△1					
△2					
△3					

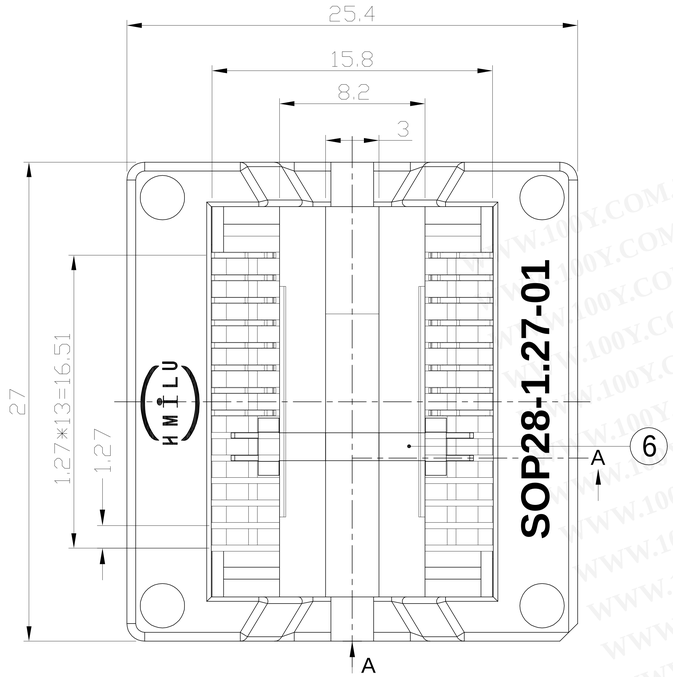

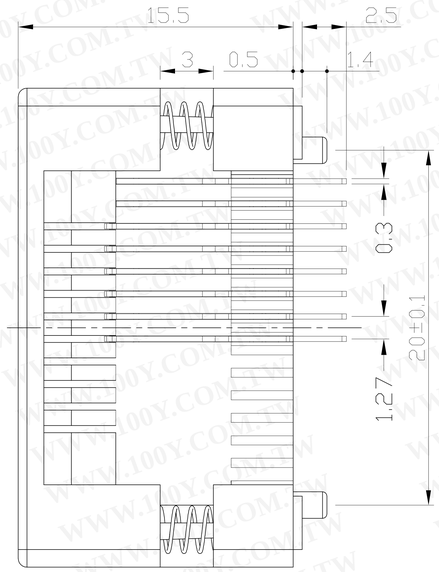

PCB PATTERN (TOP VIEW)

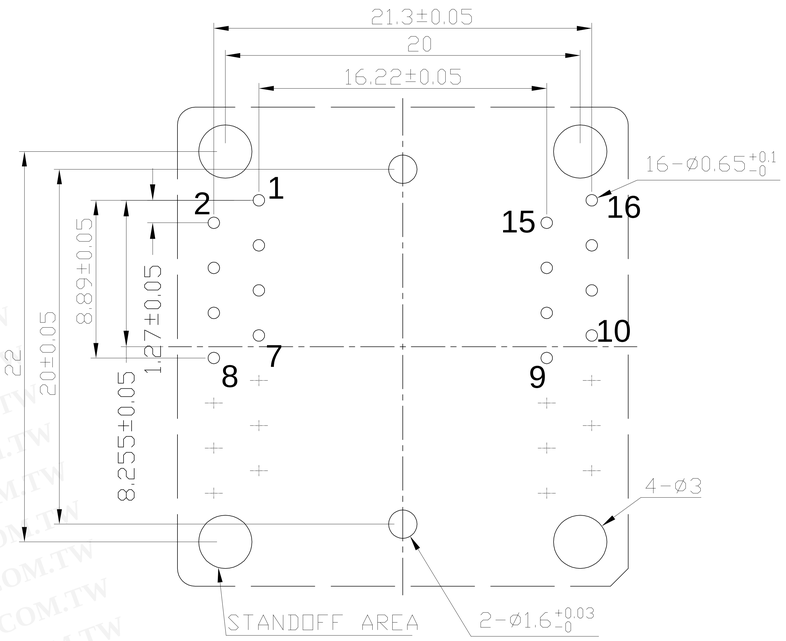

Insertion

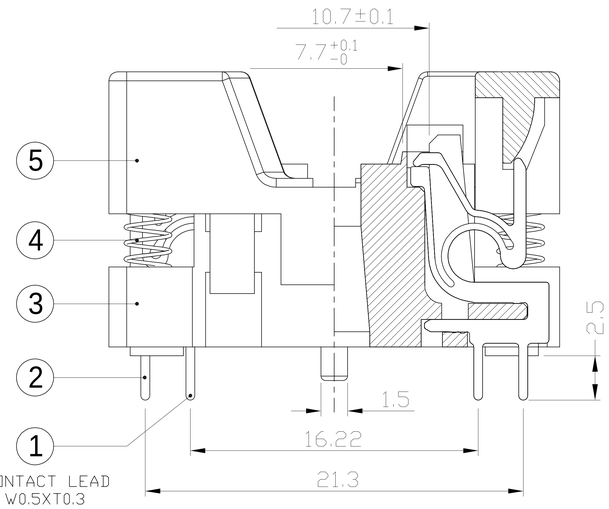

SEC.A-A

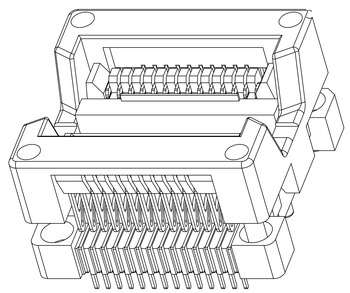

IC

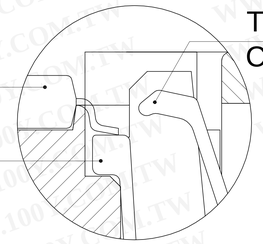

CONTAC TIP DETAIL

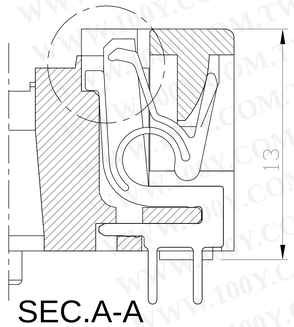

SEC.A-A
Contact Retracted

PERFORMANCE

1、Insulation Resistance: 1000mΩ Min.At DC 500V
2、Dielectric Withstanding Voltage For 1 Minute At AC 700V
3、Contact Resistance 30mΩ MAX。at 10mA and 20mV MAX.(Initial)
4、Current Rating: 1A max.
5、Operation Temperature -55°C ~+175°C
6、Life Span 15,000 Times (Mechanical)
7、Operation Force 1.0 Kg MAX

APPL ICABLE IC

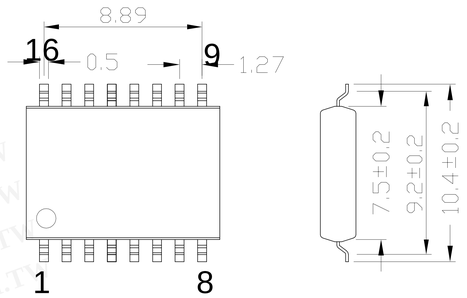

No	Part Number	Name	Material	Q/ty	Note
6	SOP-28-U01-003	ADAPTER	PEI/PES	1	BLACK
5	SOP-28-U01-002	COVER	PEI/PES	1	BLACK
4	30-B-4515X	SPRING	SUS	4	FOR COVER
3	SOP-28-U01-001	BASE	PEI/PES	1	BLACK
2	SOP-28-MSBR-02	CONTACT	BeCu	8	Au PLATING
1	SOP-28-MSBR-01	CONTACT	BeCu	8	Au PLATING

TOLERANCE	PROJECTION	GENERAL TOLERANCES	±0.10
		R E V	A
X. ±0.50	DIMENSION: mm	SCALE:	1:1
X.X ±0.25	APP:	DATE:	
X.XX ±0.10	CHECK:	DATE:	
X.XXX ±0.05	DEGK: ENG02	DATE: 20150606	

TITLE	SOP28-1.27 SOCKET
CLASS	SOP16(28)-1.27-TP03NT
DRW.NO	SOP-16/20/28-1.27-S03

HMILU

WWW.100Y.COM.TW

	REVISION DESCRIPTION	CHECK	APP	DATE	REV.NOTICE.NO
△1					
△2					
△3					

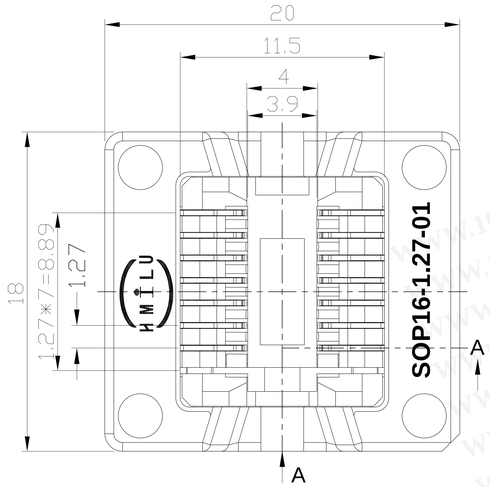

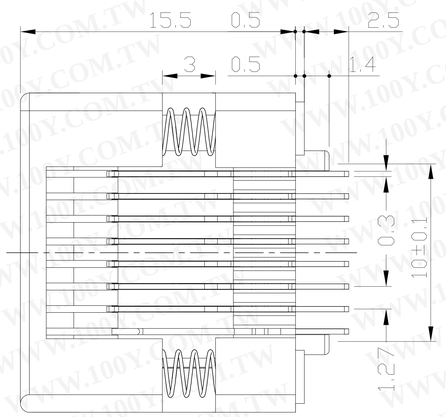

PCB PATTERN (TOP VIEW)

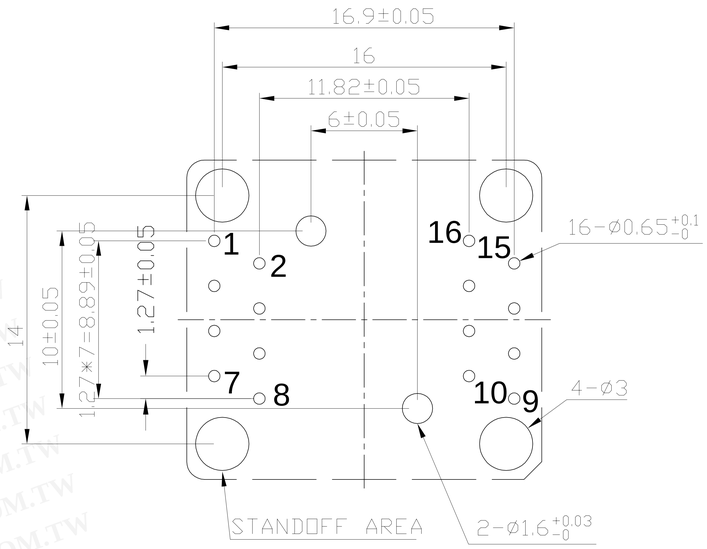

Insertion

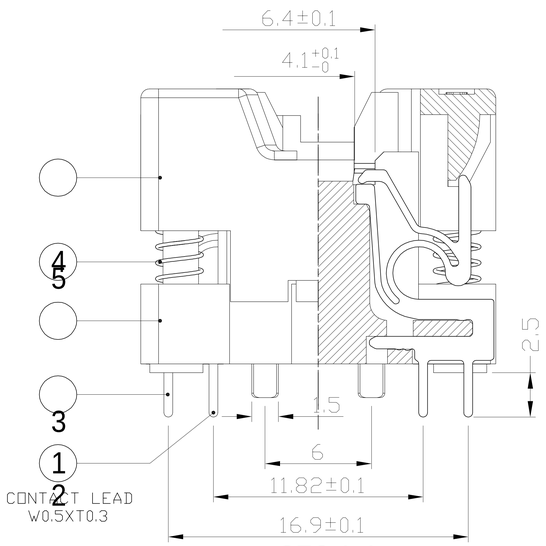

SEC.A-A

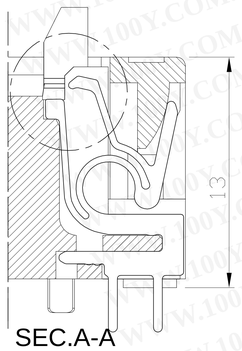

SEC.A-A
Contact Retracted

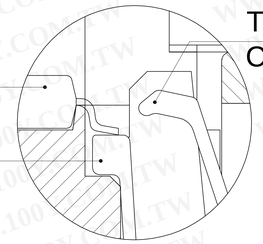

CONTAC TIP DETAIL

PERFORMANCE

1、Insulation Resistance: 1000mΩ Min.At DC 500V
2、Dielectric Withstanding Voltage For 1 Minute At AC 700V
3、Contact Resistance 30mΩ MAX。at 10mA and 20mV MAX.(Initial)
4、Current Rating: 1A max.
5、Operation Temperature -55°C ~+175°C
6、Life Span 15,000 Times (Mechanical)
7、Operation Force 1.0 Kg MAX

APPL ICABLE IC

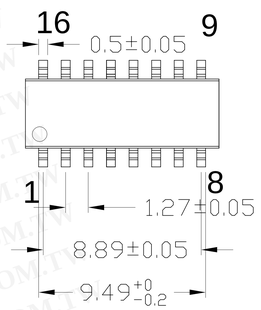

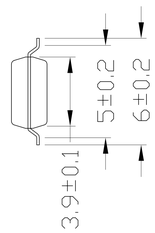

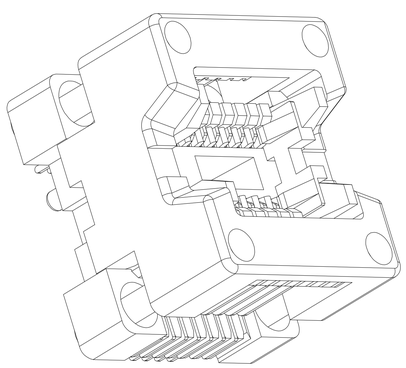

No	Part Number	Name	Material	Q/ty	Note
5	SOP-16-U01-002	COVER	PEI/PES	1	BLACK
4	30-B-4515X	SPRING	SUS	4	FOR COVER
3	SOP-16-U01-001	BASE	PEI/PES	1	BLACK
2	SOP-16-MSBR-02	CONTACT	BeCu	8	Au PLATING
1	SOP-16-MSBR-01	CONTACT	BeCu	8	Au PLATING

TOLERANCE	PROJECTION	GENERAL TOLERANCES	±0.10
		R E V	A
X. ±0.50	DIMENSION: mm	SCALE: 1:1	
X.X ±0.25	APP:	DATE:	
X.XX ±0.10	CHECK:	DATE:	
X.XXX ±0.05	DEGK: ENG02	DATE: 20150606	

TITLE	SOP16-1.27 SOCKET
CLASS	**SOP16-1.27-TP01NT**
DRW.NO	SOP-8/16-1.27-S01

HMILU

WWW.100Y.COM.TW

	REVISION DESCRIPTION	CHECK	APP	DATE	REV.NOTICE.NO
△1					
△2					
△3					

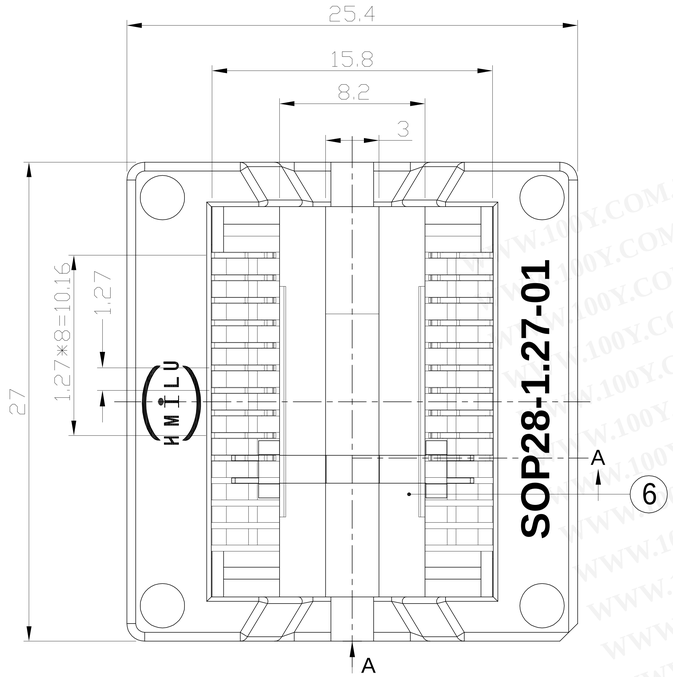

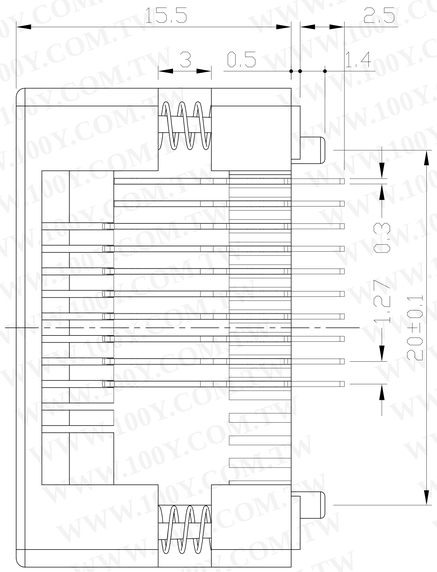

PCB PATTERN (TOP VIEW)

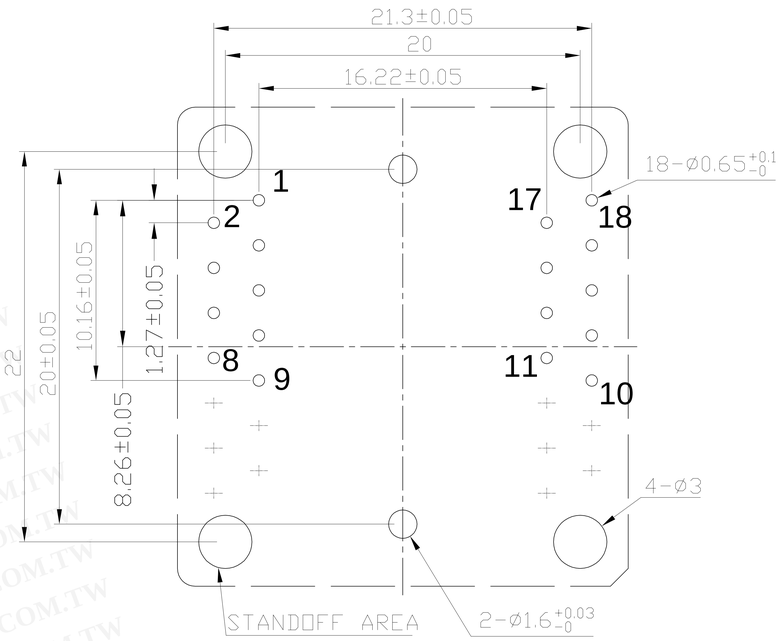

Insertion

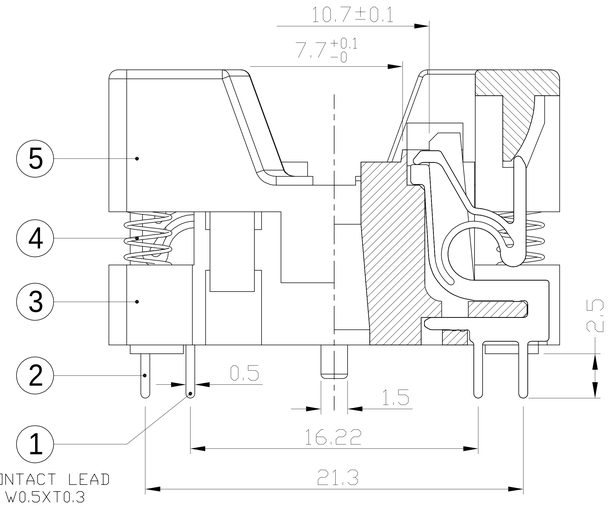

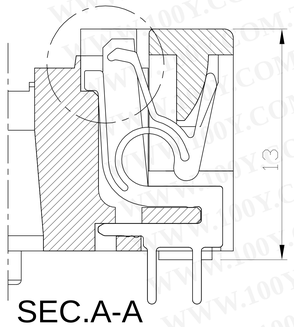

SEC.A-A
Contact Retracted

SEC.A-A

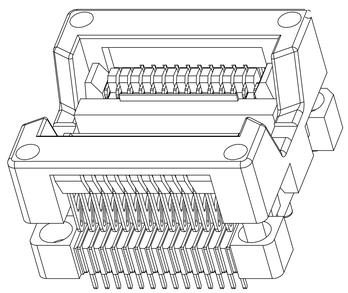

IC

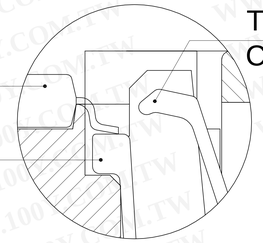

CONTAC TIP DETAIL

PERFORMANCE

1、Insulation Resistance: 1000mΩ Min.At DC 500V
2、Dielectric Withstanding Voltage For 1 Minute At AC 700V
3、Contact Resistance 30mΩ MAX。at 10mA and 20mV MAX.(Initial)
4、Current Rating: 1A max.
5、Operation Temperature -55°C ~+175°C
6、Life Span 15,000 Times (Mechanical)
7、Operation Force 1.0 Kg MAX

APPL ICABLE IC

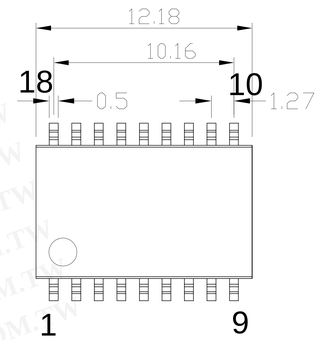

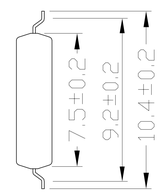

No	Part Number	Name	Material	Q/ty	Note
6	SOP-28-U01-003	ADAPTER	PEI/PES	1	BLACK
5	SOP-28-U01-002	COVER	PEI/PES	1	BLACK
4	30-B-4515X	SPRING	SUS	4	FOR COVER
3	SOP-28-U01-001	BASE	PEI/PES	1	BLACK
2	SOP-28-MSBR-02	CONTACT	BeCu	9	Au PLATING
1	SOP-28-MSBR-01	CONTACT	BeCu	9	Au PLATING

TOLERANCE	PROJECTION	GENERAL TOLERANCES	±0.10
		R E V	A
X. ±0.50	DIMENSION: mm	SCALE:	1:1
X.X ±0.25	APP:	DATE:	
X.XX ±0.10	CHECK:	DATE:	
X.XXX ±0.05	DEGK: ENG03	DATE: 20160119	

TITLE	SOP28-1.27 SOCKET
CLASS	SOP18(28)-1.27-TP04NT
DRW.NO	OTS-18(28)-1.27-04

HMILU

WWW.100Y.COM.TW

	REVISION DESCRIPTION	CHECK	APP	DATE	REV.NOTICE.NO
△1					
△2					
△3					

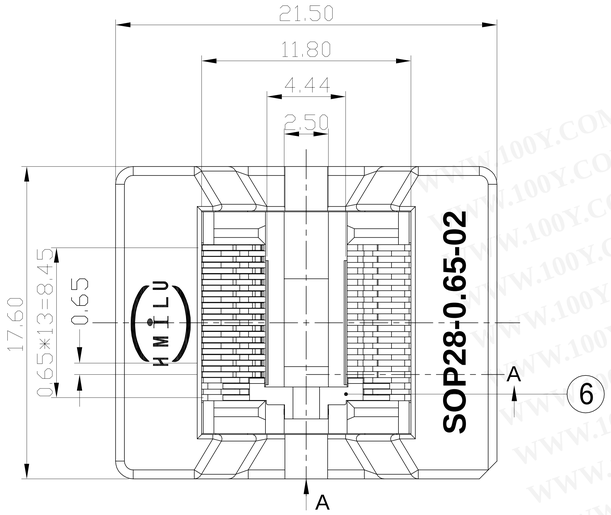

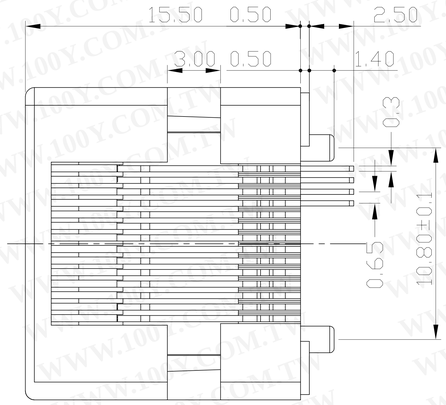

PCB PATTERN (TOP VIEW)

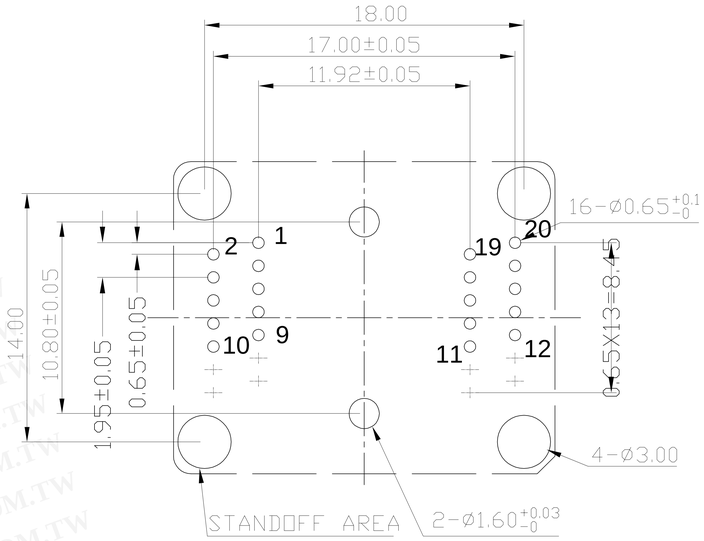

Insertion

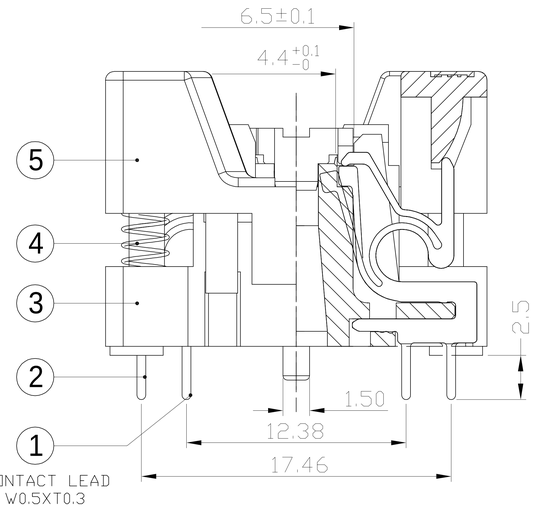

SEC.A-A

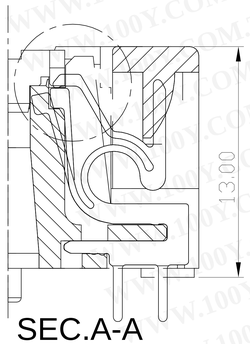

SEC.A-A
Contact Retracted

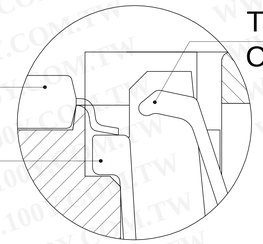

CONTAC TIP DETAIL

APPL ICABLE IC

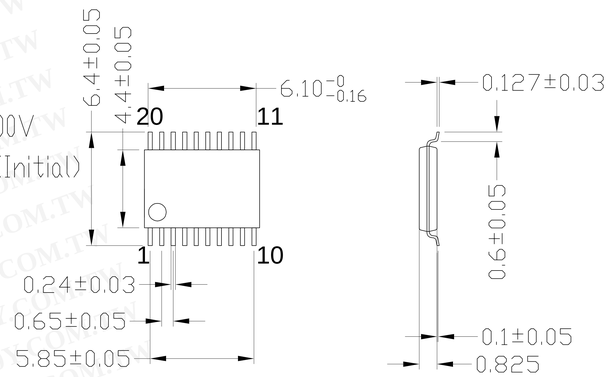

PERFORMANCE

1、Insulation Resistance: 1000mΩ Min.At DC 500V
2、Dielectric Withstanding Voltage For 1 Minute At AC 700V
3、Contact Resistance 30mΩ MAX。at 10mA and 20mV MAX.(Initial)
4、Current Rating: 1A max.
5、Operation Temperature -55°C ~+175°C
6、Life Span 15,000 Times (Mechanical)
7、Operation Force 1.0 Kg MAX

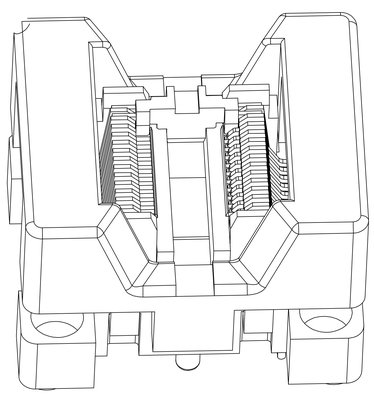

No	Part Number	Name	Material	Q/ty	Note
6	SOP-28-U01-003	ADAPTER	PEI/PES	1	BLACK
5	SOP-28-U01-002	COVER	PEI/PES	1	BLACK
4	30-B-4515X	SPRING	SUS	4	FOR COVER
3	SOP-28-U01-001	BASE	PEI/PES	1	BLACK
2	SOP-28-MSBR-02	CONTACT	BeCu	10	Au PLATING
1	SOP-28-MSBR-01	CONTACT	BeCu	10	Au PLATING

TOLERANCE	PROJECTION	GENERAL TOLERANCES	±0.10
		REV	A
X. ±0.50	DIMENSION: mm	SCALE: 1:1	
X.X ±0.25	APP:	DATE:	
X.XX ±0.10	CHECK:	DATE:	
X.XXX ±0.05	DEGK: ENG02	DATE: 20150727	

TITLE	SOP28-0.65 SOCKET
CLASS	SOP20(28)-0.65-TP06NT
DRW.NO	SOP-8/14/16/20/24/28-0.65-M02

HMILU

WWW.100Y.COM.TW

	REVISION DESCRIPTION	CHECK	APP	DATE	REV.NOTICE.NO
△1					
△2					
△3					

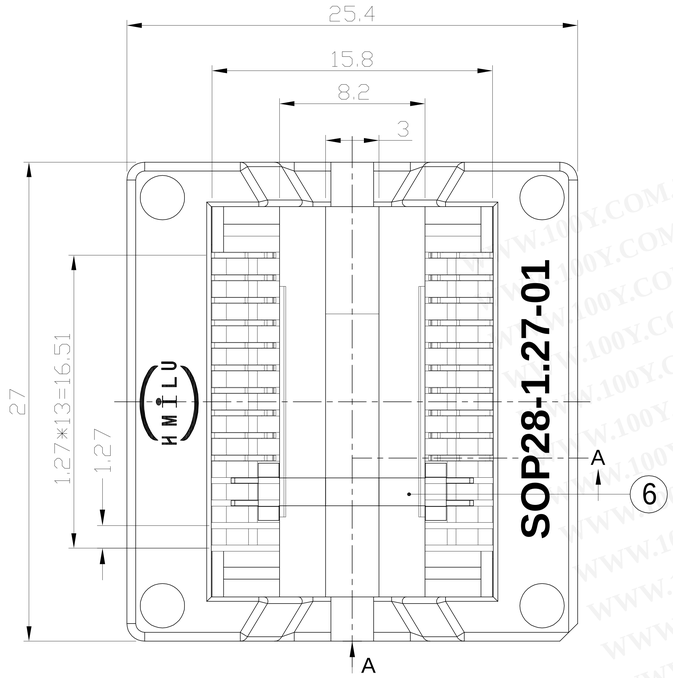

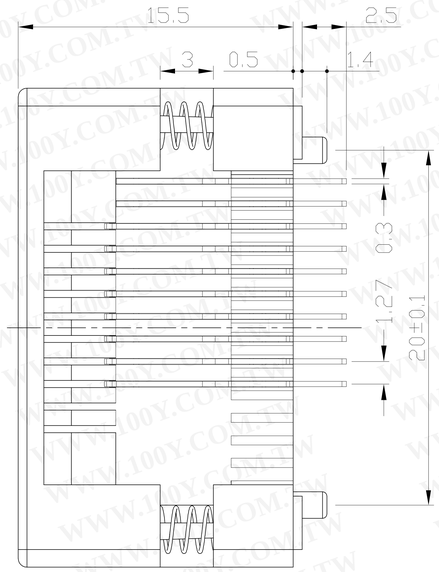

PCB PATTERN (TOP VIEW)

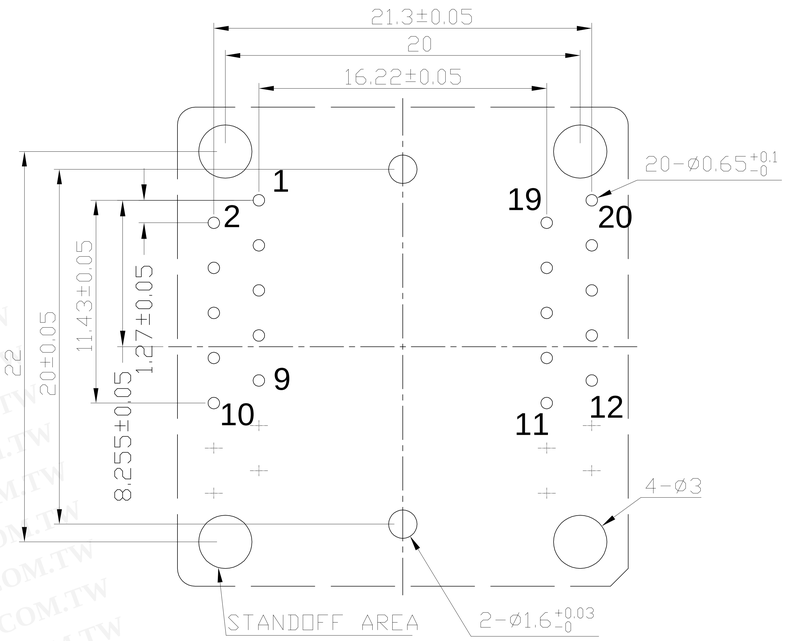

Insertion

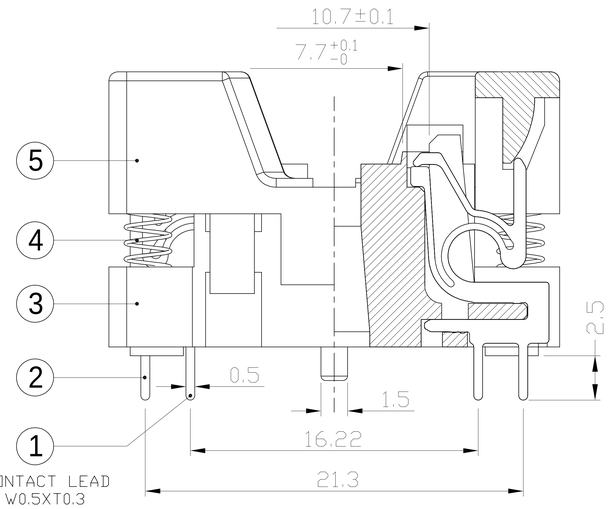

SEC.A-A

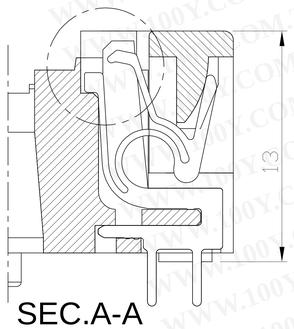

SEC.A-A
Contact Retracted

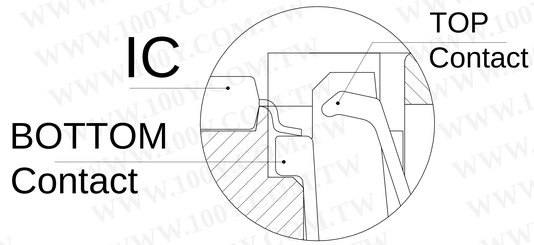

CONTAC TIP DETAIL

PERFORMANCE

1、Insulation Resistance: 1000mΩ Min.At DC 500V
2、Dielectric Withstanding Voltage For 1 Minute At AC 700V
3、Contact Resistance 30mΩ MAX。at 10mA and 20mV MAX.(Initial)
4、Current Rating: 1A max.
5、Operation Temperature -55°C ~+175°C
6、Life Span 15,000 Times (Mechanical)
7、Operation Force 1.0 Kg MAX

APPL ICABLE IC

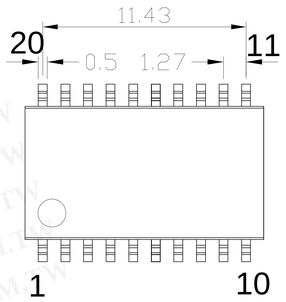

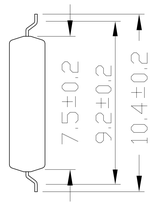

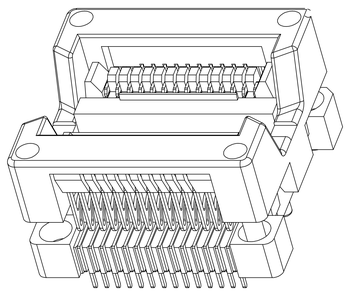

No	Part Number	Name	Material	Q/ty	Note
6	SOP-28-U01-003	ADAPTER	PEI/PES	1	BLACK
5	SOP-28-U01-002	COVER	PEI/PES	1	BLACK
4	30-B-4515X	SPRING	SUS	4	FOR COVER
3	SOP-28-U01-001	BASE	PEI/PES	1	BLACK
2	SOP-28-MSBR-02	CONTACT	BeCu	10	Au PLATING
1	SOP-28-MSBR-01	CONTACT	BeCu	10	Au PLATING

TOLERANCE	PROJECTION	GENERAL TOLERANCES	±0.10
		R E V	A
X. ±0.50	DIMENSION: mm	SCALE: 1:1	
X.X ±0.25	APP:	DATE:	
X.XX ±0.10	CHECK:	DATE:	
X.XXX ±0.05	DEGK: ENG02	DATE: 20150606	

TITLE	SOP28-1.27 SOCKET
CLASS	SOP20(28)-1.27-TP02NT
DRW.NO	SOP-16/20/28-1.27-S02

HMILU

WWW.100Y.COM.TW

	REVISION DESCRIPTION	CHECK	APP	DATE	REV.NOTICE.NO
△1					
△2					
△3					

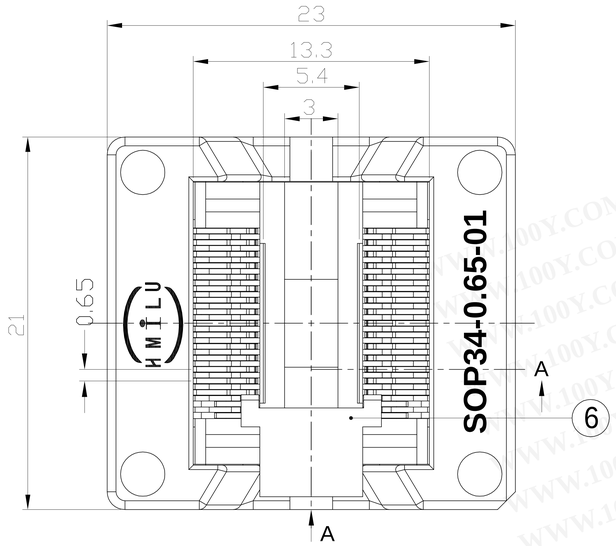

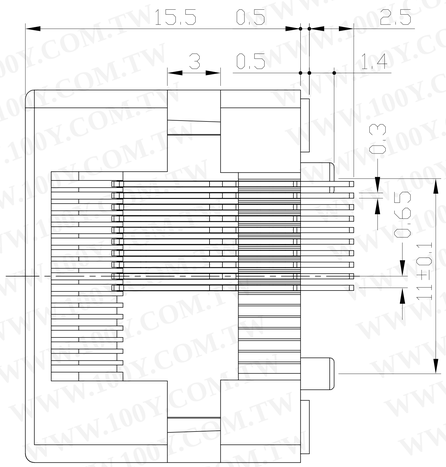

PCB PATTERN (TOP VIEW)

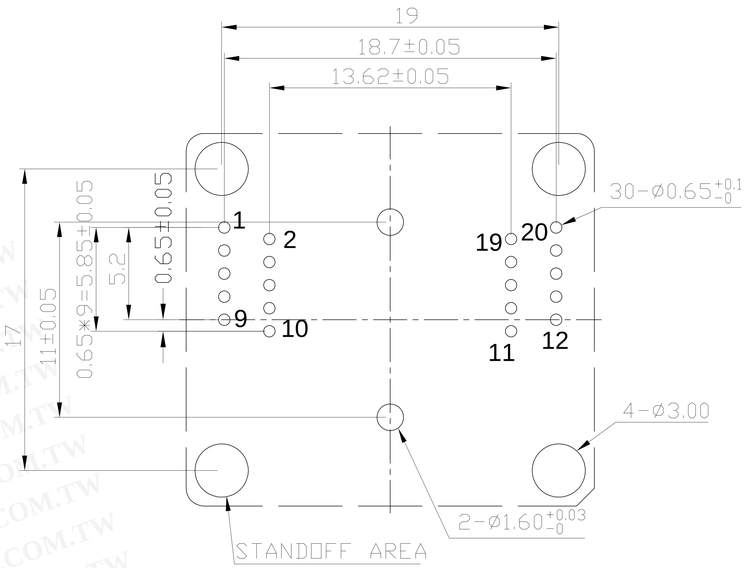

Insertion

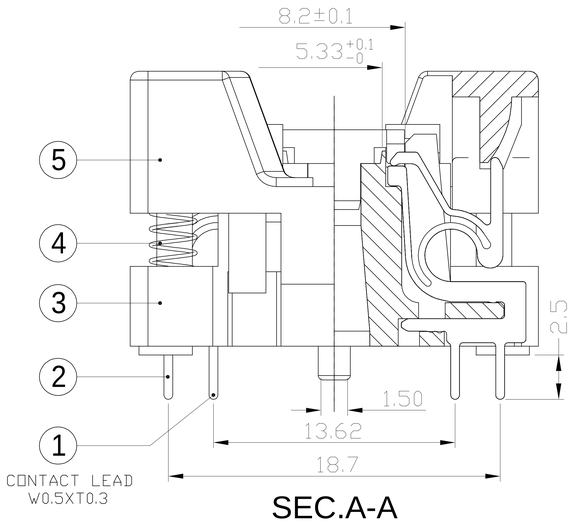

SEC.A-A

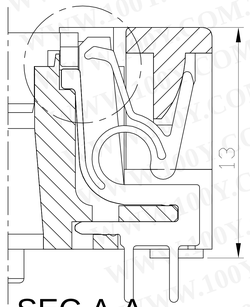

SEC.A-A
Contact Retracted

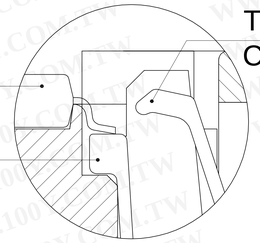

CONTAC TIP DETAIL

PERFORMANCE

1、Insulation Resistance: 1000mΩ Min.At DC 500V
2、Dielectric Withstanding Voltage For 1 Minute At AC 700V
3、Contact Resistance 30mΩ MAX。at 10mA and 20mV MAX.(Initial)
4、Current Rating: 1A max.
5、Operation Temperature -55°C ~+175°C
6、Life Span 15,000 Times (Mechanical)
7、Operation Force 1.0 Kg MAX

APPL ICABLE IC

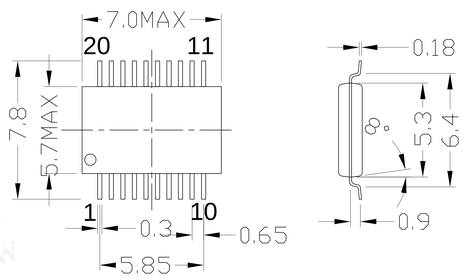

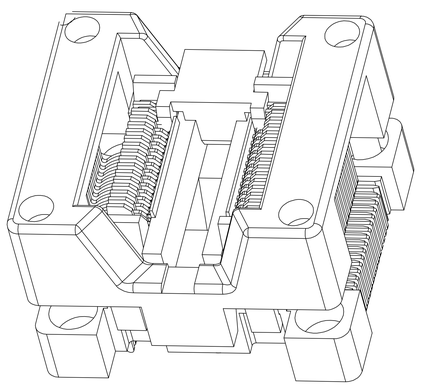

No	Part Number	Name	Material	Q/ty	Note
6	SOP-34-U01-003	ADAPTER	PEI/PES	1	BLACK
5	SOP-34-U01-002	COVER	PEI/PES	1	BLACK
4	30-B-4515X	SPRING	SUS	4	FOR COVER
3	SOP-34-U01-001	BASE	PEI/PES	1	BLACK
2	SOP-34-MSBR-02	CONTACT	BeCu	10	Au PLATING
1	SOP-34-MSBR-01	CONTACT	BeCu	10	Au PLATING

TOLERANCE	PROJECTION	GENERAL TOLERANCES	±0.10
		R E V	A
X. ±0.50	DIMENSION: mm	SCALE: 1:1	
X.X ±0.25	APP:	DATE:	
X.XX ±0.10	CHECK:	DATE:	
X.XXX ±0.05	DEGK: ENG03	DATE: 20150727	

TITLE	SOP34-0.65 SOCKET
CLASS	SOP20(34)-0.65-TP05NT
DRW.NO	SOP-20/24/28/30/34-0.65-L04

HMILU

WWW.100Y.COM.TW

	REVISION DESCRIPTION	CHECK	APP	DATE	REV.NOTICE.NO
△1					
△2					
△3					

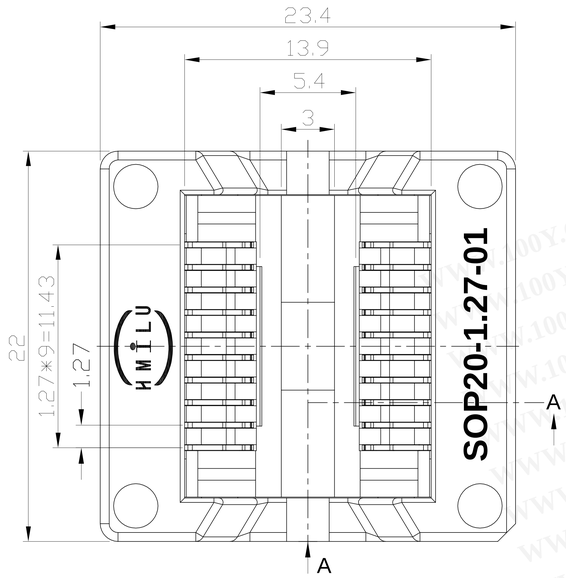

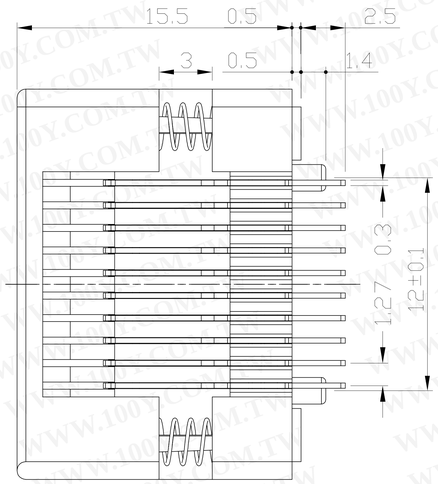

Insertion

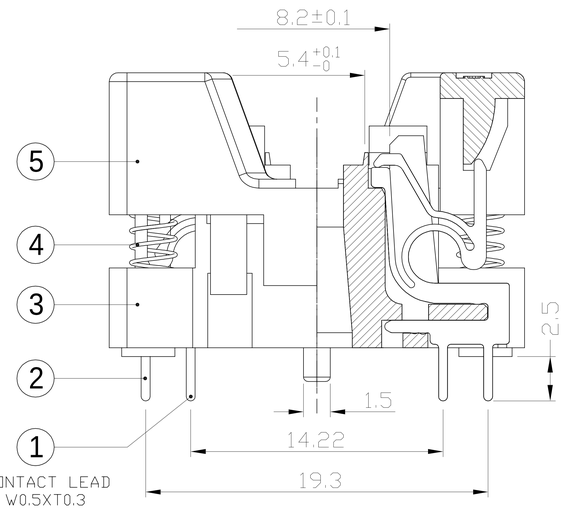

SEC.A-A

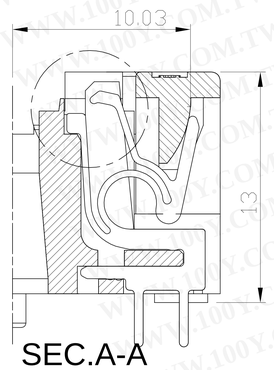

SEC.A-A
Contact Retracted

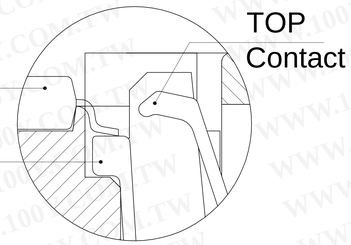

CONTAC TIP DETAIL

PCB PATTERN (TOP VIEW)

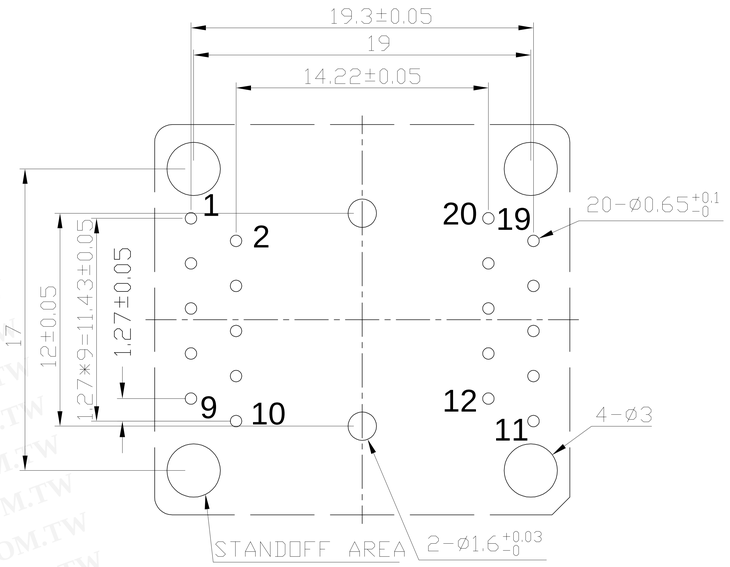

PERFORMANCE

1、Insulation Resistance: 1000mΩ Min.At DC 500V
2、Dielectric Withstanding Voltage For 1 Minute At AC 700V
3、Contact Resistance 30mΩ MAX。at 10mA and 20mV MAX.(Initial)
4、Current Rating: 1A max.
5、Operation Temperature -55°C ~+175°C
6、Life Span 15,000 Times (Mechanical)
7、Operation Force 1.0 Kg MAX

APPL ICABLE IC

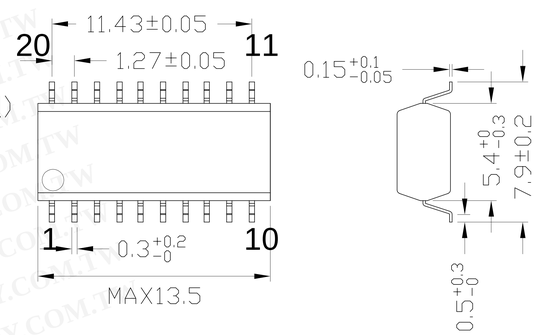

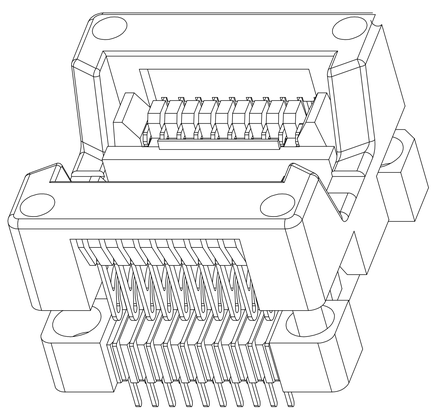

No	Part Number	Name	Material	Q/ty	Note
5	SOP-20-U01-002	COVER	PEI/PES	1	BLACK
4	30-B-4515X	SPRING	SUS	4	FOR COVER
3	SOP-20-U01-001	BASE	PEI/PES	1	BLACK
2	SOP-20-MSBR-02	CONTACT	BeCu	10	Au PLATING
1	SOP-20-MSBR-01	CONTACT	BeCu	10	Au PLATING

TOLERANCE	PROJECTION	GENERAL TOLERANCES	±0.10
		R E V	A
X. ±0.50	DIMENSION: mm	SCALE: 1:1	
X.X ±0.25	APP:	DATE:	
X.XX ±0.10	CHECK:	DATE:	
X.XXX ±0.05	DEGK: ENG02	DATE: 20150606	

TITLE	SOP20-1.27 SOCKET
CLASS	SOP20-1.27-TP01NT
DRW.NO	SOP-14/16/20-1.27-M01

HMILU

WWW.100Y.COM.TW

	REVISION DESCRIPTION	CHECK	APP	DATE	REV.NOTICE.NO
△1					
△2					
△3					

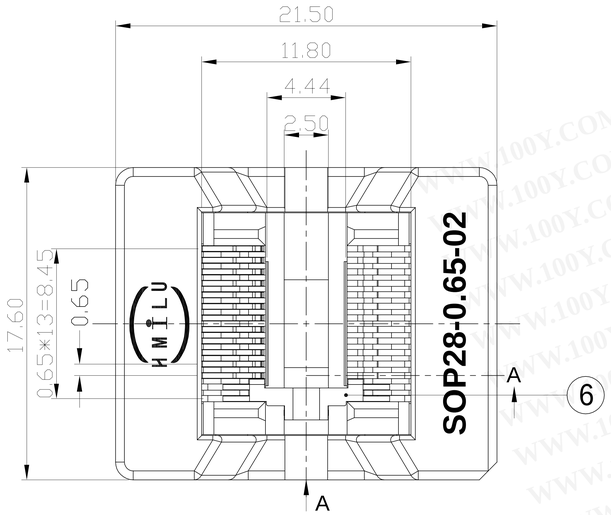

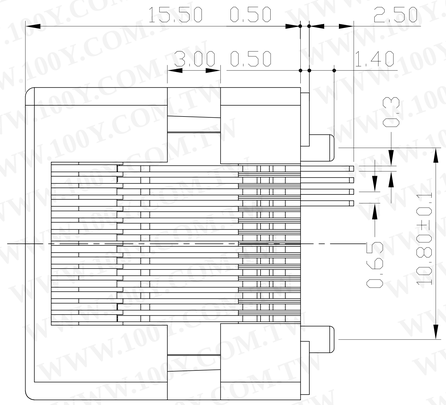

PCB PATTERN (TOP VIEW)

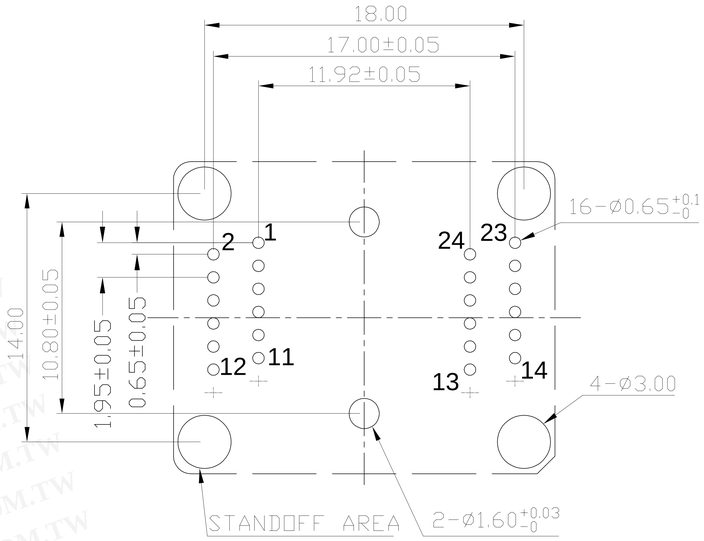

Insertion

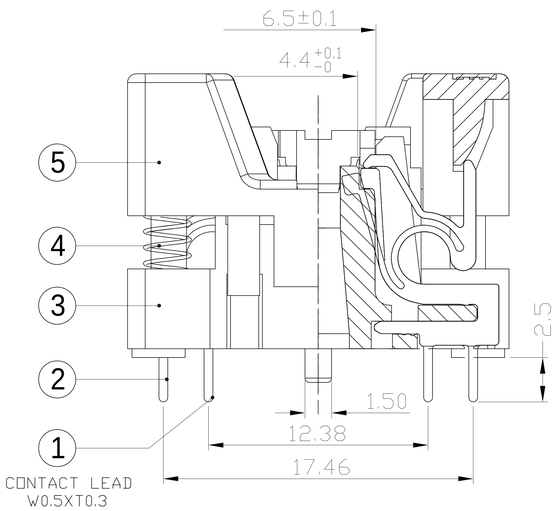

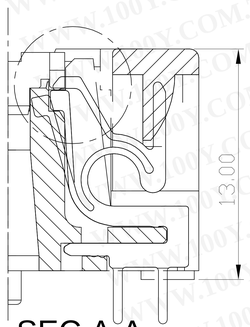

SEC.A-A
Contact Retracted

SEC.A-A

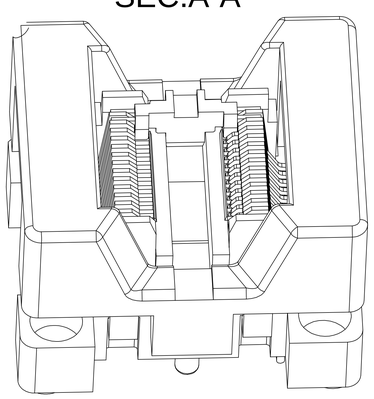

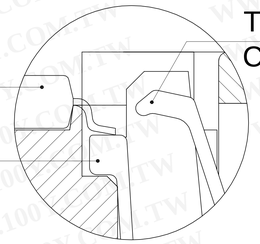

CONTAC TIP DETAIL

PERFORMANCE

1、Insulation Resistance: 1000mΩ Min.At DC 500V
2、Dielectric Withstanding Voltage For 1 Minute At AC 700V
3、Contact Resistance 30mΩ MAX。at 10mA and 20mV MAX.(Initial)
4、Current Rating: 1A max.
5、Operation Temperature -55°C ~+175°C
6、Life Span 15,000 Times (Mechanical)
7、Operation Force 1.0 Kg MAX

APPL ICABLE IC

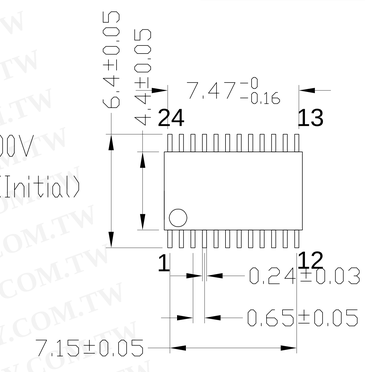

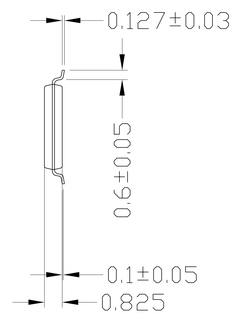

No	Part Number	Name	Material	Q/ty	Note
6	SOP-28-U01-003	ADAPTER	PEI/PES	1	BLACK
5	SOP-28-U01-002	COVER	PEI/PES	1	BLACK
4	30-B-4515X	SPRING	SUS	4	FOR COVER
3	SOP-28-U01-001	BASE	PEI/PES	1	BLACK
2	SOP-28-MSBR-02	CONTACT	BeCu	12	Au PLATING
1	SOP-28-MSBR-01	CONTACT	BeCu	12	Au PLATING

TOLERANCE	PROJECTION	GENERAL TOLERANCES	±0.10
		REV	A
X. ±0.50	DIMENSION: mm	SCALE: 1:1	
X.X ±0.25	APP:	DATE:	
X.XX ±0.10	CHECK:	DATE:	
X.XXX ±0.05	DEGK: ENG02	DATE: 20150727	

TITLE	SOP28-0.65 SOCKET
CLASS	SOP24(28)-0.65-TP04NT
DRW.NO	SOP-8/14/16/20/24/28-0.65-M02

HMILU

WWW.100Y.COM.TW

	REVISION DESCRIPTION	CHECK	APP	DATE	REV.NOTICE.NO
△1					
△2					
△3					

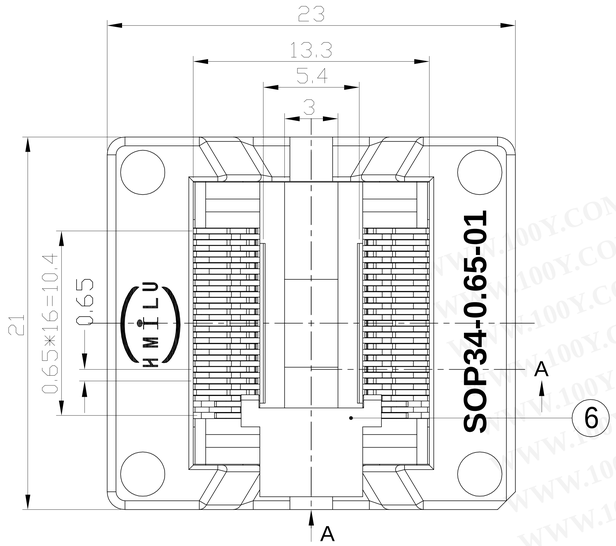

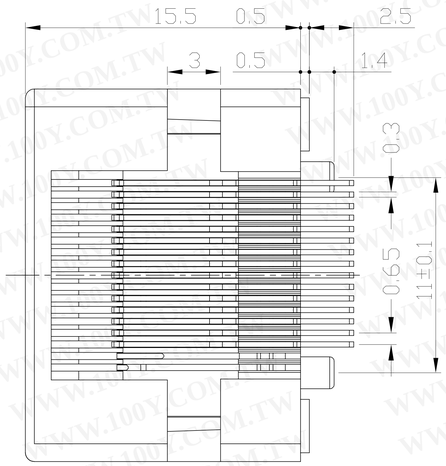

PCB PATTERN (TOP VIEW)

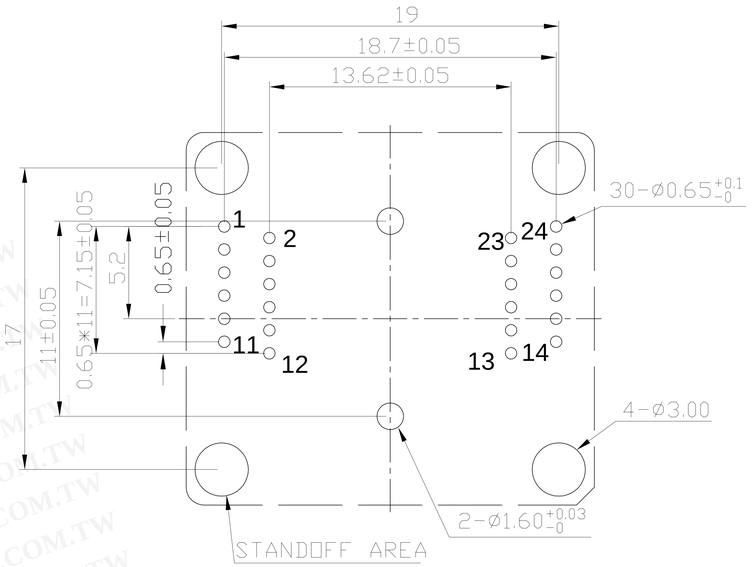

Insertion

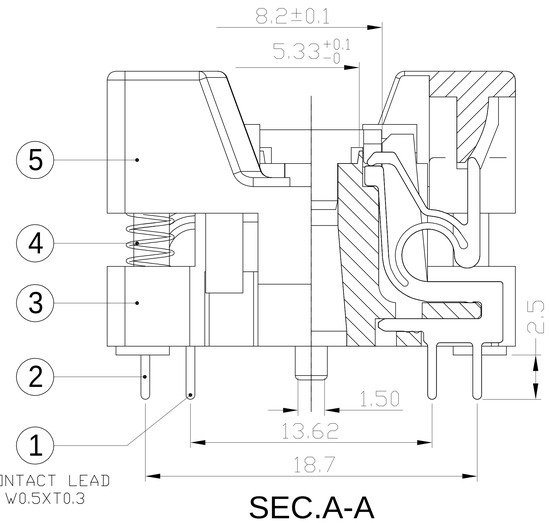

SEC.A-A

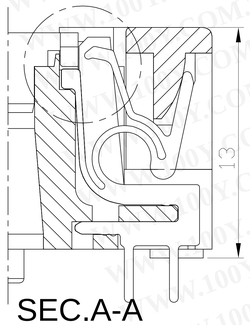

SEC.A-A
Contact Retracted

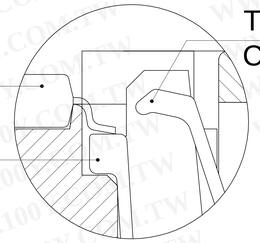

CONTAC TIP DETAIL

PERFORMANCE

1、Insulation Resistance: 1000mΩ Min.At DC 500V
2、Dielectric Withstanding Voltage For 1 Minute At AC 700V
3、Contact Resistance 30mΩ MAX。at 10mA and 20mV MAX.(Initial)
4、Current Rating: 1A max.
5、Operation Temperature -55°C ~+175°C
6、Life Span 15,000 Times (Mechanical)
7、Operation Force 1.0 Kg MAX

APPL ICABLE IC

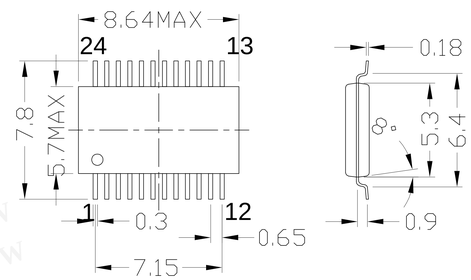

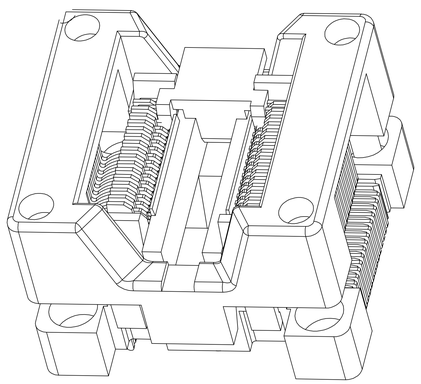

No	Part Number	Name	Material	Q/ty	Note
6	SOP-34-U01-003	ADAPTER	PEI/PES	1	BLACK
5	SOP-34-U01-002	COVER	PEI/PES	1	BLACK
4	30-B-4515X	SPRING	SUS	4	FOR COVER
3	SOP-34-U01-001	BASE	PEI/PES	1	BLACK
2	SOP-34-MSBR-02	CONTACT	BeCu	12	Au PLATING
1	SOP-34-MSBR-01	CONTACT	BeCu	12	Au PLATING

TOLERANCE	PROJECTION	GENERAL TOLERANCES	±0.10
		R E V	A
X. ± 0.50	DIMENSION: mm	SCALE: 1:1	
X.X ± 0.25	APP:	DATE:	
X.XX ± 0.10	CHECK:	DATE:	
X.XXX ± 0.05	DEGK: ENG02	DATE: 20150727	

TITLE	SOP34-0.65 SOCKET
CLASS	SOP24(34)-0.65-TP04NT
DRW.NO	SOP-24/28/30/34-0.65-L04

HMILU

WWW.100Y.COM.TW

	REVISION DESCRIPTION	CHECK	APP	DATE	REV.NOTICE.NO
△1					
△2					
△3					

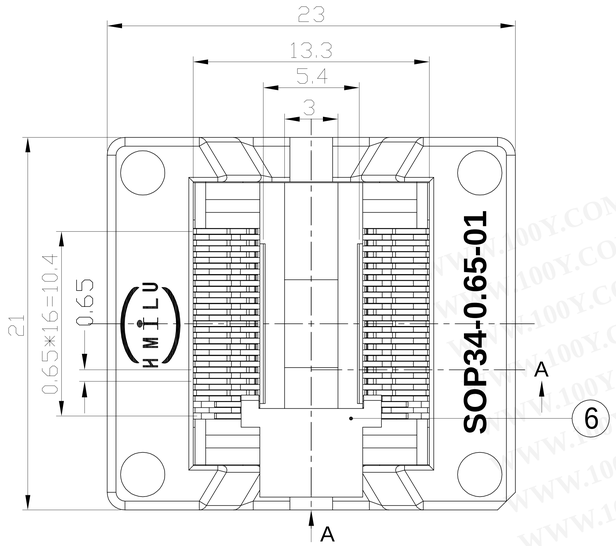

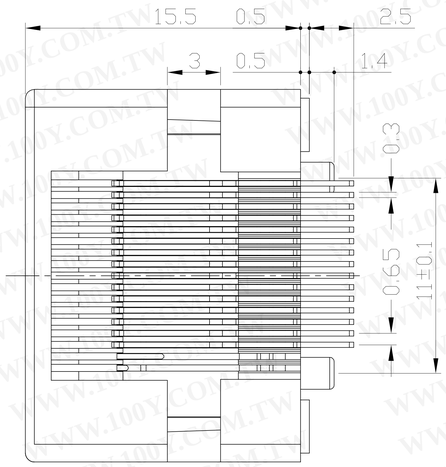

PCB PATTERN (TOP VIEW)

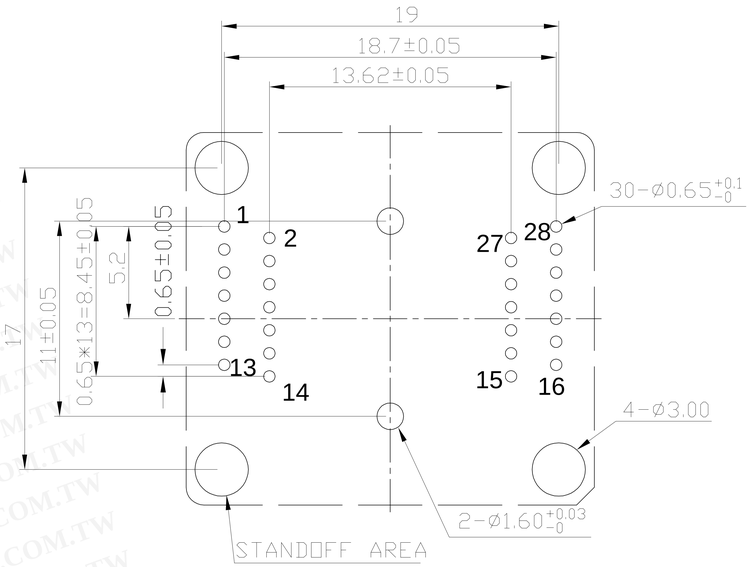

Insertion

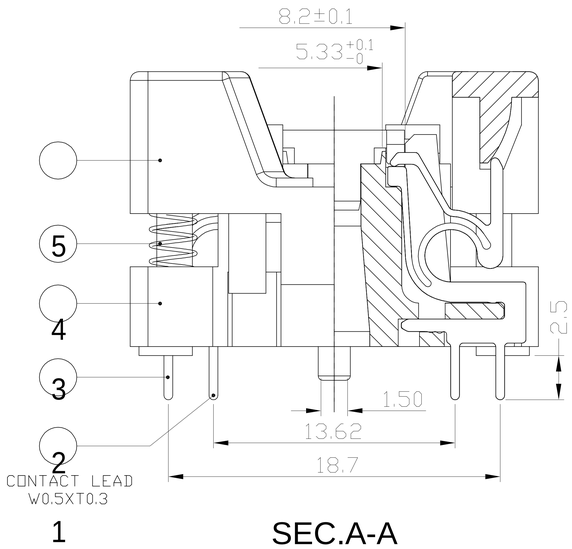

SEC.A-A

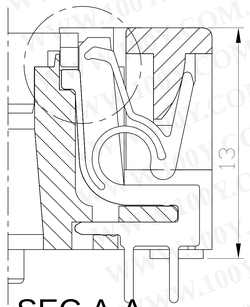

SEC.A-A
Contact Retracted

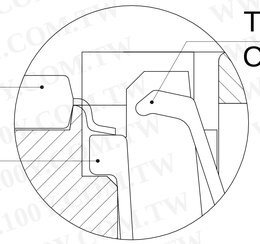

CONTAC TIP DETAIL

PERFORMANCE

1、Insulation Resistance: 1000mΩ Min.At DC 500V
2、Dielectric Withstanding Voltage For 1 Minute At AC 700V
3、Contact Resistance 30mΩ MAX。at 10mA and 20mV MAX.(Initial)
4、Current Rating: 1A max.
5、Operation Temperature -55°C ~+175°C
6、Life Span 15,000 Times (Mechanical)
7、Operation Force 1.0 Kg MAX

APPL ICABLE IC

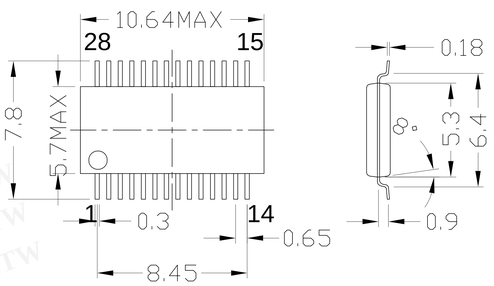

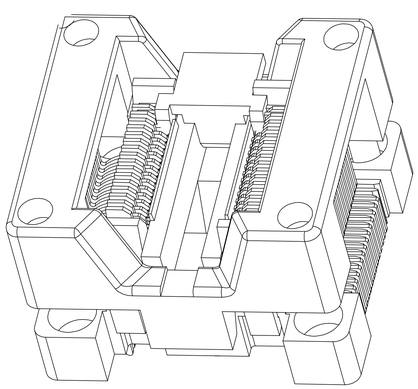

No	Part Number	Name	Material	Q/ty	Note
6	SOP-34-U01-003	ADAPTER	PEI/PES	1	BLACK
5	SOP-34-U01-002	COVER	PEI/PES	1	BLACK
4	30-B-4515X	SPRING	SUS	4	FOR COVER
3	SOP-34-U01-001	BASE	PEI/PES	1	BLACK
2	SOP-34-MSBR-02	CONTACT	BeCu	14	Au PLATING
1	SOP-34-MSBR-01	CONTACT	BeCu	14	Au PLATING

TOLERANCE	PROJECTION	GENERAL TOLERANCES	±0.10
		R E V	A
X. ± 0.50	DIMENSION: mm	SCALE: 1:1	
X.X ± 0.25	APP:	DATE:	
X.XX ± 0.10	CHECK:	DATE:	
X.XXX ± 0.05	DEGK: ENG02	DATE: 20150727	

TITLE	SOP34-0.65 SOCKET
CLASS	SOP28(34)-0.65-TP03NT
DRW.NO	SOP-24/28/30/34-0.65-L03

HMILU

WWW.100Y.COM.TW

	REVISION DESCRIPTION	CHECK	APP	DATE	REV.NOTICE.NO
△1					
△2					
△3					

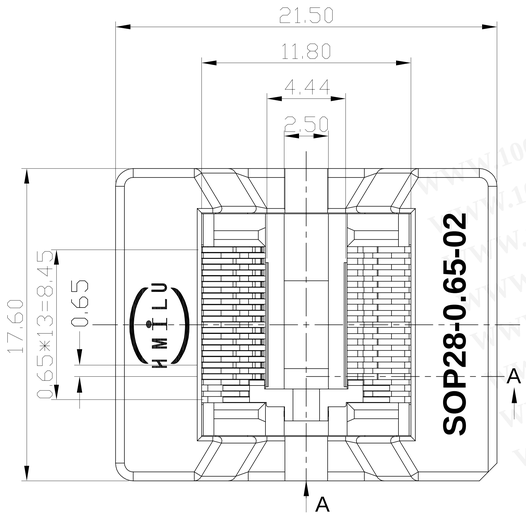

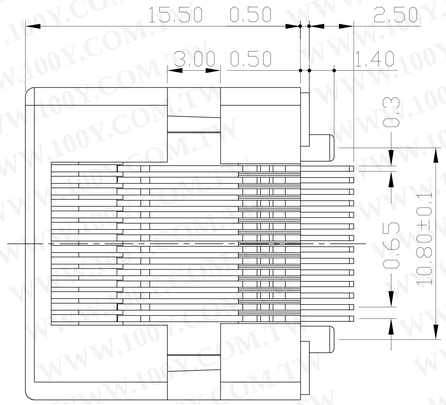

PCB PATTERN (TOP VIEW)

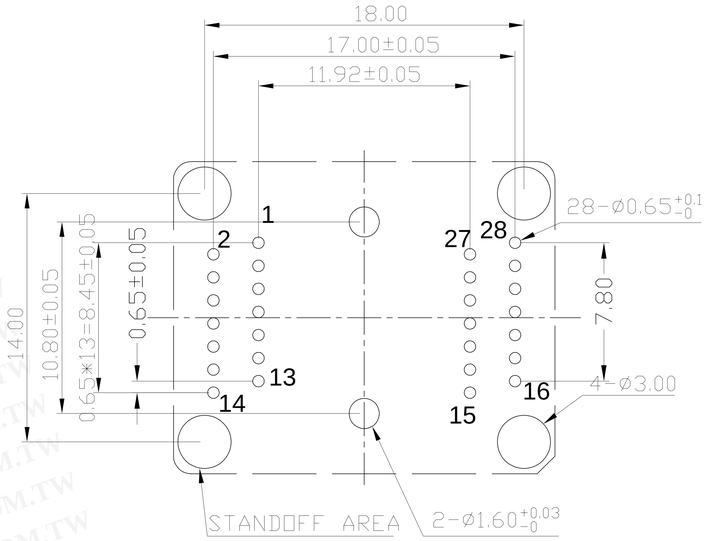

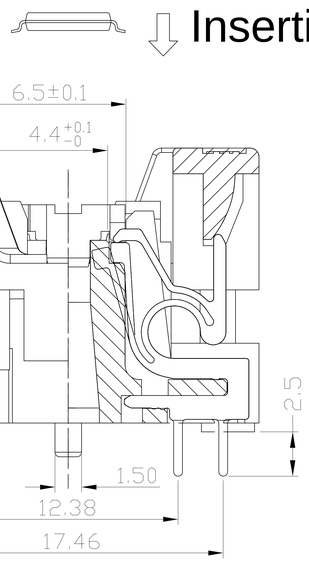

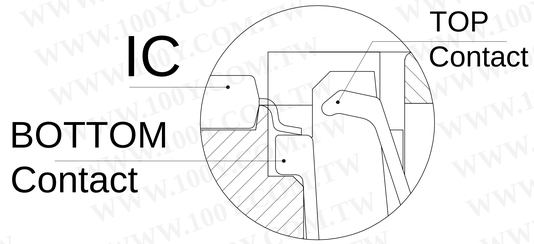

CONTAC TIP DETAIL

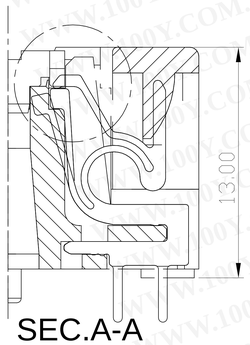

SEC.A-A
Contact Retracted

PERFORMANCE

1、Insulation Resistance: 1000mΩ Min.At DC 500V
2、Dielectric Withstanding Voltage For 1 Minute At AC 700V
3、Contact Resistance 30mΩ MAX。at 10mA and 20mV MAX.(Initial)
4、Current Rating: 1A max.
5、Operation Temperature -55°C ~+175°C
6、Life Span 15,000 Times (Mechanical)
7、Operation Force 1.0 Kg MAX

APPL ICABLE IC

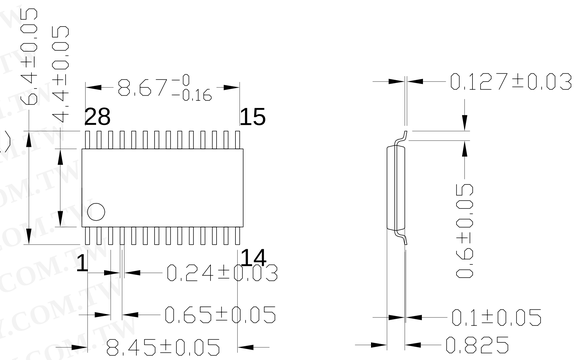

CONTACT LEAD
W0.5XT0.3

SEC.A-A

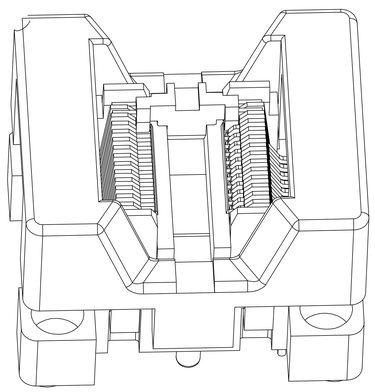

No	Part Number	Name	Material	Q/ty	Note
5	SOP-28-U01-002	COVER	PEI/PES	1	BLACK
4	30-B-4515X	SPRING	SUS	4	FOR COVER
3	SOP-28-U01-001	BASE	PEI/PES	1	BLACK
2	SOP-28-MSBR-02	CONTACT	BeCu	14	Au PLATING
1	SOP-28-MSBR-01	CONTACT	BeCu	14	Au PLATING

TOLERANCE	PROJECTION	GENERAL TOLERANCES	±0.10
		R E V	A
X. ± 0.50	DIMENSION: mm	SCALE: 1:1	
X.X ± 0.25	APP:	DATE:	
X.XX ± 0.10	CHECK:	DATE:	
X.XXX ± 0.05	DEGK: ENG02	DATE: 20150727	

TITLE	SOP28-0.65 SOCKET
CLASS	**SOP28-0.65-TP01NT**
DRW.NO	SOP-8/14/16/20/24/28-0.65-M02

HMILU

WWW.100Y.COM.TW

	REVISION DESCRIPTION	CHECK	APP	DATE	REV.NOTICE.NO
△1					
△2					
△3					

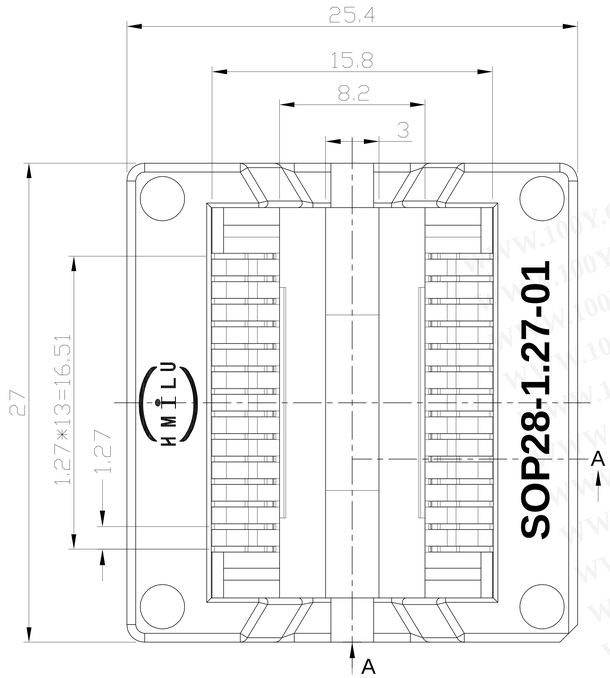

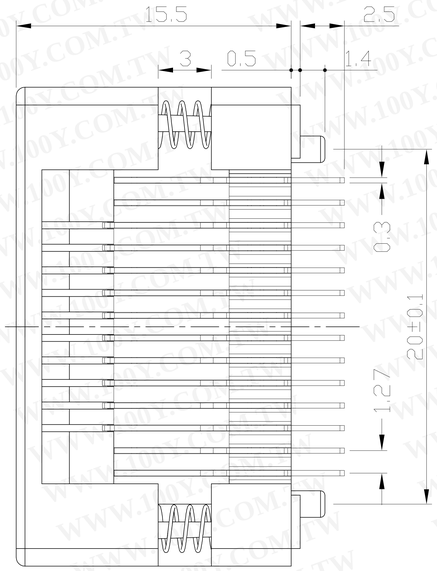

PCB PATTERN (TOP VIEW)

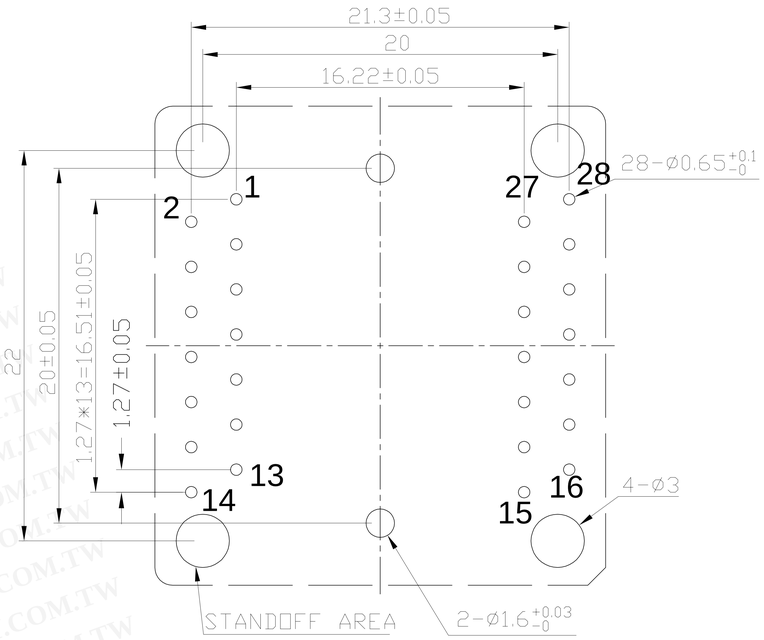

Insertion

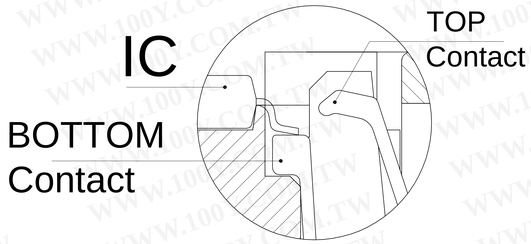

CONTAC TIP DETAIL

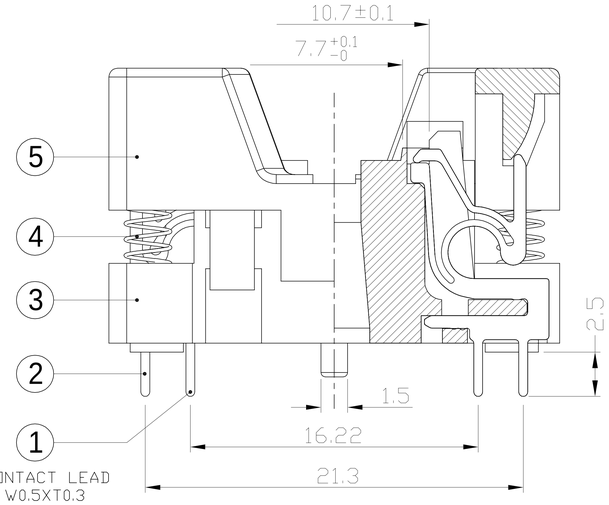

SEC.A-A

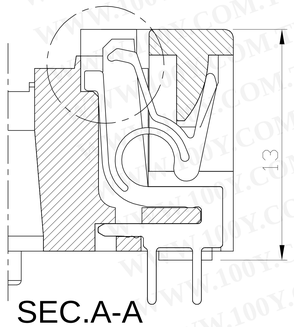

SEC.A-A
Contact Retracted

PERFORMANCE

1、Insulation Resistance: 1000mΩ Min.At DC 500V
2、Dielectric Withstanding Voltage For 1 Minute At AC 700V
3、Contact Resistance 30mΩ MAX. at 10mA and 20mV MAX.(Initial)
4、Current Rating: 1A max.
5、Operation Temperature -55°C ~+175°C
6、Life Span 15,000 Times (Mechanical)
7、Operation Force 1.0 Kg MAX

APPL ICABLE IC

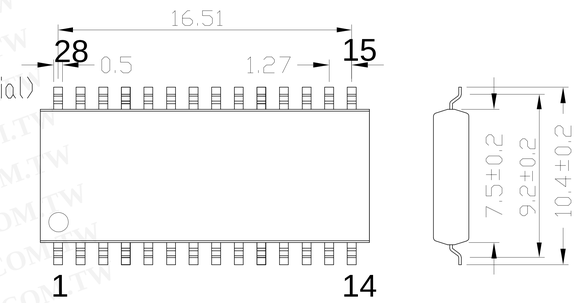

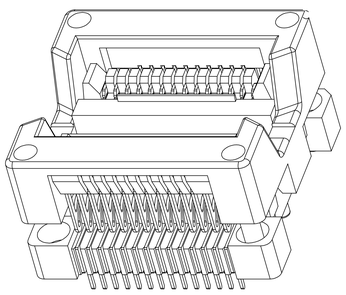

No	Part Number	Name	Material	Q/ty	Note
5	SOP-28-U01-002	COVER	PEI/PES	1	BLACK
4	30-B-4515X	SPRING	SUS	4	FOR COVER
3	SOP-28-U01-001	BASE	PEI/PES	1	BLACK
2	SOP-28-MSBR-02	CONTACT	BeCu	14	Au PLATING
1	SOP-28-MSBR-01	CONTACT	BeCu	14	Au PLATING

TOLERANCE	PROJECTION		GENERAL TOLERANCES	±0.10	TITLE: SOP28-1.27 SOCKET
			REV	A	CLASS: SOP28-1.27-TP01NT
X. ±0.50	DIMENSION: mm		SCALE: 1:1		DRW.NO: SOP-16/20/28-1.27-L01
X.X ±0.25	APP:		DATE:		
X.XX ±0.10	CHECK:		DATE:		
X.XXX ±0.05	DEGK: ENG02		DATE: 20160606		HMILU

WWW.100Y.COM.TW

	REVISION DESCRIPTION	CHECK	APP	DATE	REV.NOTICE.NO
△1					
△2					
△3					

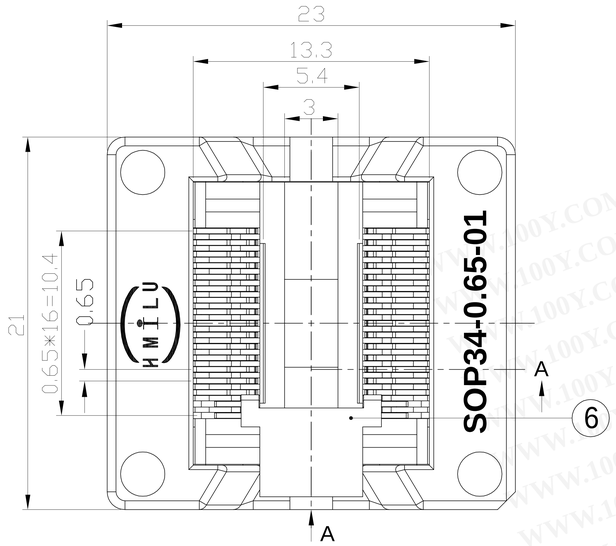

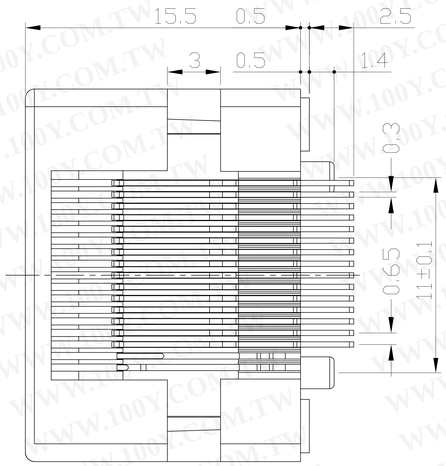

PCB PATTERN (TOP VIEW)

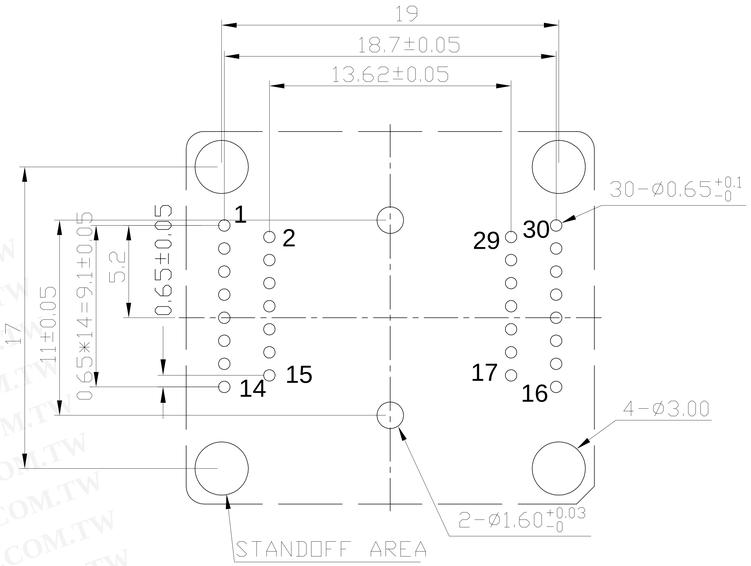

Insertion

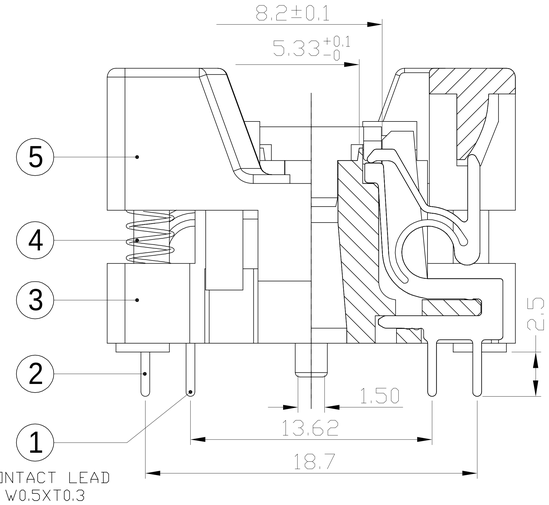

SEC.A-A

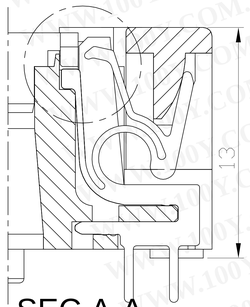

SEC.A-A
Contact Retracted

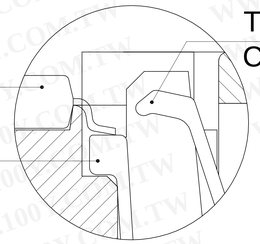

CONTAC TIP DETAIL

PERFORMANCE

1、Insulation Resistance: 1000mΩ Min.At DC 500V
2、Dielectric Withstanding Voltage For 1 Minute At AC 700V
3、Contact Resistance 30mΩ MAX。at 10mA and 20mV MAX.(Initial)
4、Current Rating: 1A max.
5、Operation Temperature -55°C ~+175°C
6、Life Span 15,000 Times (Mechanical)
7、Operation Force 1.0 Kg MAX

APPL ICABLE IC

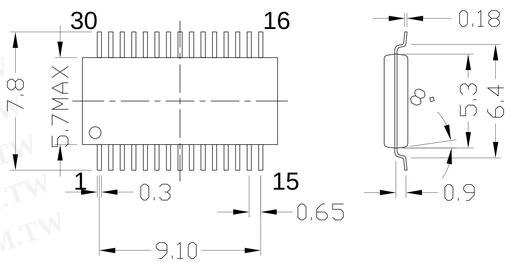

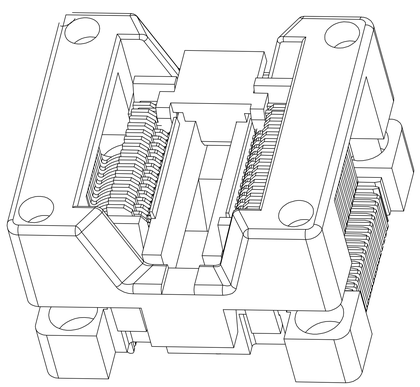

No	Part Number	Name	Material	Q/ty	Note
6	SOP-34-U01-003	ADAPTER	PEI/PES	1	BLACK
5	SOP-34-U01-002	COVER	PEI/PES	1	BLACK
4	30-B-4515X	SPRING	SUS	4	FOR COVER
3	SOP-34-U01-001	BASE	PEI/PES	1	BLACK
2	SOP-34-MSBR-02	CONTACT	BeCu	15	Au PLATING
1	SOP-34-MSBR-01	CONTACT	BeCu	15	Au PLATING

TOLERANCE	PROJECTION	GENERAL TOLERANCES	±0.10
		R E V	A
X. ± 0.50	DIMENSION: mm	SCALE: 1:1	
X.X ± 0.25	APP:	DATE:	
X.XX ± 0.10	CHECK:	DATE:	
X.XXX ± 0.05	DEGK: ENG02	DATE: 20150727	

TITLE	SOP34-0.65 SOCKET
CLASS	SOP30(34)-0.65-TP02NT
DRW.NO	SOP-24/28/30/34-0.65-L02

HMILU

WWW.100Y.COM.TW

	REVISION DESCRIPTION	CHECK	APP	DATE	REV.NOTICE.NO
△1					
△2					
△3					

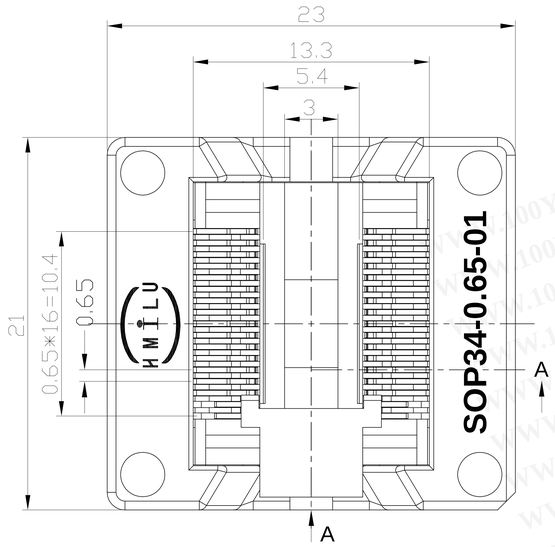

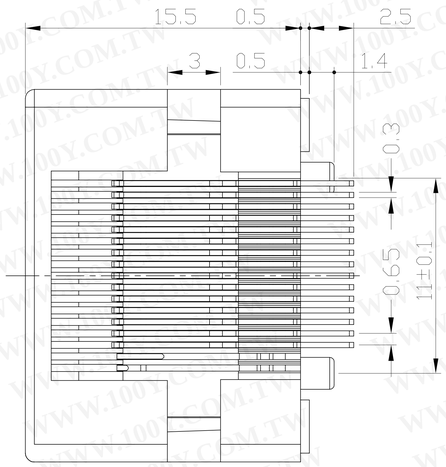

Insertion

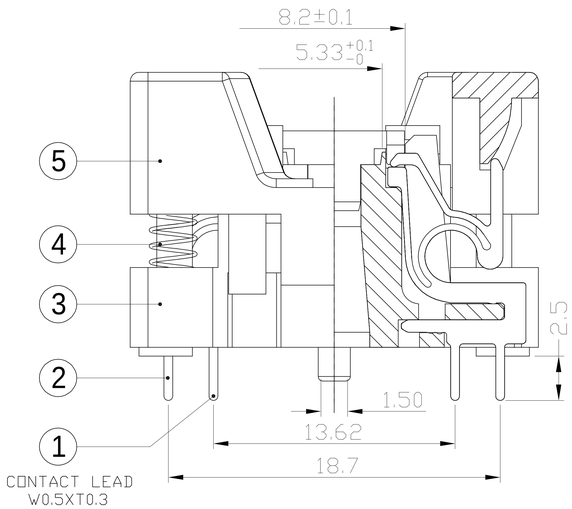

SEC.A-A

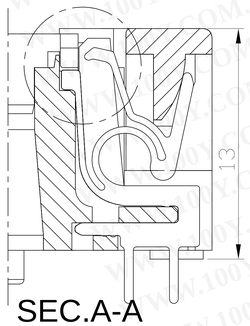

SEC.A-A
Contact Retracted

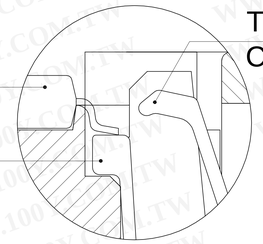

CONTAC TIP DETAIL

PCB PATTERN (TOP VIEW)

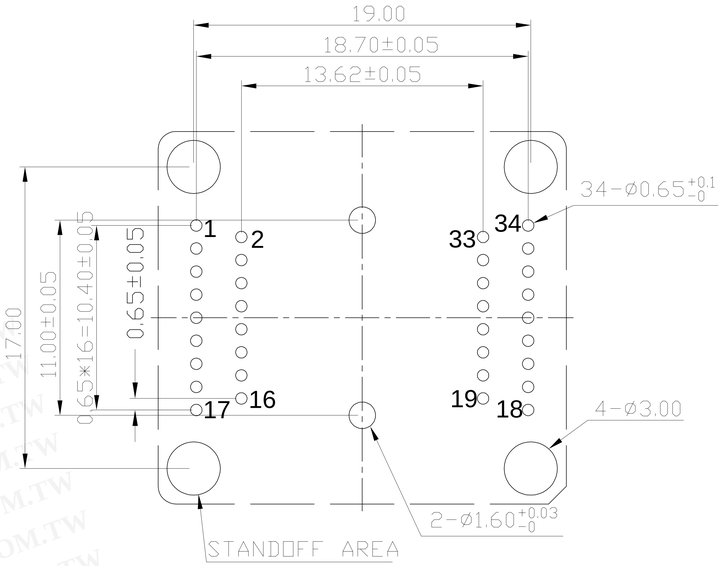

APPL ICABLE IC

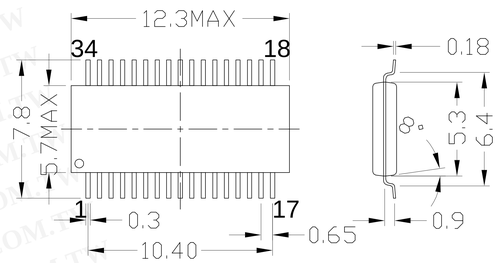

PERFORMANCE

1、Insulation Resistance: 1000mΩ Min.At DC 500V
2、Dielectric Withstanding Voltage For 1 Minute At AC 700V
3、Contact Resistance 30mΩ MAX。at 10mA and 20mV MAX.(Initial)
4、Current Rating: 1A max.
5、Operation Temperature -55°C ~+175°C
6、Life Span 15,000 Times (Mechanical)
7、Operation Force 1.0 Kg MAX

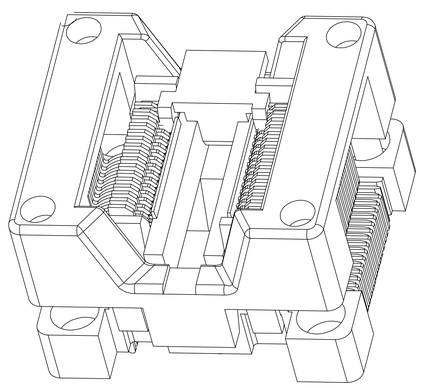

No	Part Number	Name	Material	Q/ty	Note
5	SOP-34-U01-002	COVER	PEI/PES	1	BLACK
4	30-B-4515X	SPRING	SUS	4	FOR COVER
3	SOP-34-U01-001	BASE	PEI/PES	1	BLACK
2	SOP-34-MSBR-02	CONTACT	BeCu	17	Au PLATING
1	SOP-34-MSBR-01	CONTACT	BeCu	17	Au PLATING

TOLERANCE	PROJECTION	GENERAL TOLERANCES	±0.10
		REV	A
X. ±0.50	DIMENSION: mm	SCALE:	1:1
X.X ±0.25	APP:	DATE:	
X.XX ±0.10	CHECK:	DATE:	
X.XXX ±0.05	DEGK: ENG02	DATE: 20150727	

TITLE	SOP34-0.65 SOCKET
CLASS	SOP34-0.65-TP01NT
DRW.NO	SOP-24/28/30/34-0.65-L01

HMILU

WWW.100Y.COM.TW

勝 特 力 材 料 886-3-5753170
胜特力电子(上海) 86-21-34970699
胜特力电子(深圳) 86-755-83298787
Http://www.100y.com.tw

	REVISION DESCRIPTION	CHECK	APP	DATE	REV.NOTICE.NO
△1					
△2					
△3					

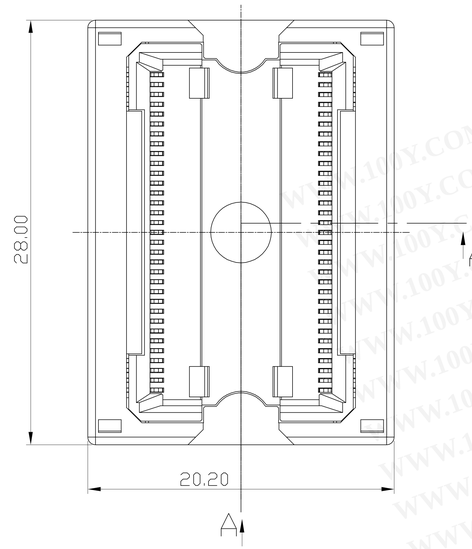

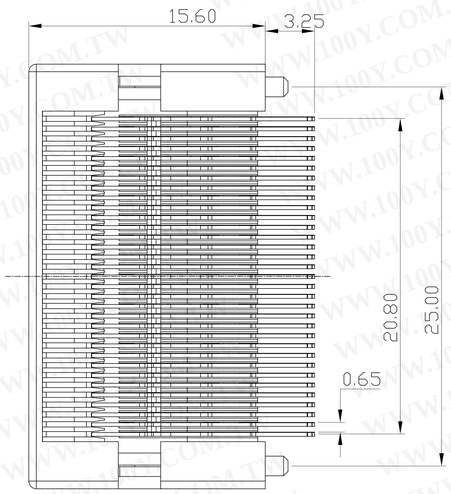

PCB PATTERN (TOP VIEW)

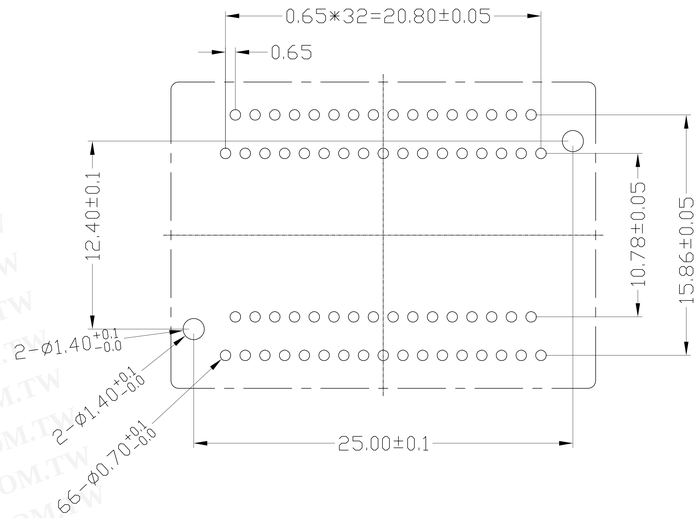

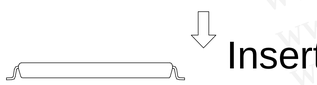

Insertion

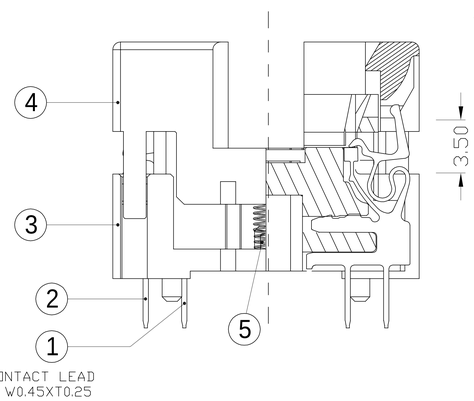

SECTION A-A

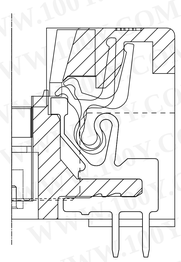

Contact Retracted
SEC.A-A

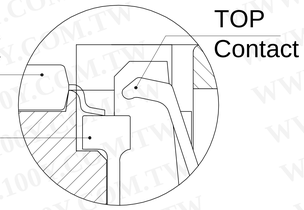

CONTAC TIP DETAIL

APPL ICABLE IC

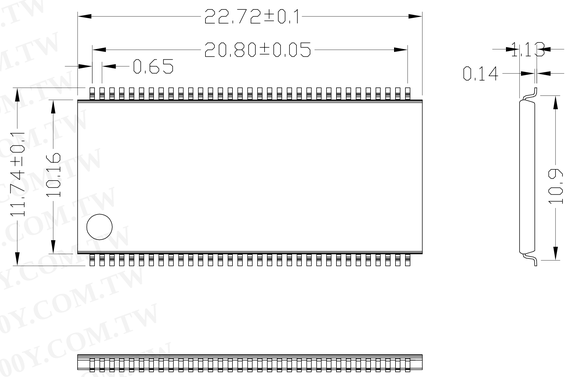

PERFORMANCE

1、Insulation Resistance: 1000mΩ Min.At DC 500V
2、Dielectric Withstanding Voltage For 1 Minute At AC 700V
3、Contact Resistance 30mΩ MAX。at 10mA and 20mV MAX.(Initial)
4、Current Rating: 1A max.
5、Operation Temperature -55°C ~+175°C
6、Life Span 100,000 Times (Mechanical)
7、Operation Force 1.0 Kg MAX

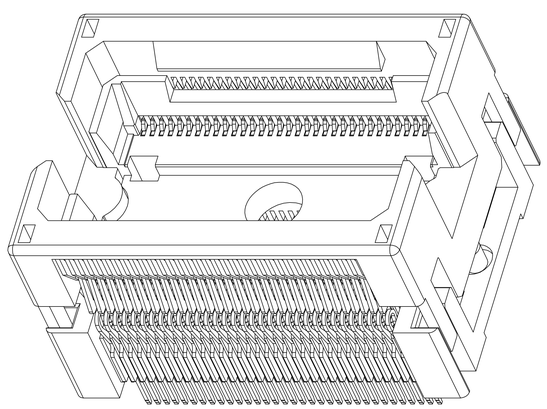

No	Part Number	Name	Material	Q/ty	Note
5	30-B-4515X	SPRING	SUS	2	FOR COVER
4	SOP-38-U01-002	COVER	PEI/PES	1	BLACK
3	SOP-38-U01-001	BASE	PEI/PES	1	BLACK
2	TSOP-66-MSBR-0B	CONTACT	BeCu	33	Au PLATING
1	TSOP-66-MSBR-0A	CONTACT	BeCu	33	Au PLATING

PROJECTION		GENERAL TOLERANCES	±0.10
		R E V	A
DIMENSION:	mm	SCALE:	1:1
APP:		DATE:	
CHECK:		DATE:	
DEGK:	ENG03	DATE:	20150727

TITLE	TSOP66-0.65 SOCKET
CLASS	TSOP66-0.65-TP01NT
DRW.NO	01

HMILU