THIS DRAWING IS UNPUBLISHED. RELEASED FOR PUBLICATION - , - .
© COPYRIGHT - By - ALL RIGHTS RESERVED.

LOC	DIST
AD	0

REVISIONS

P	LTR	DESCRIPTION	DATE	DWN	APVD
	A	RELEASED	18NOV13	W.W	C.W

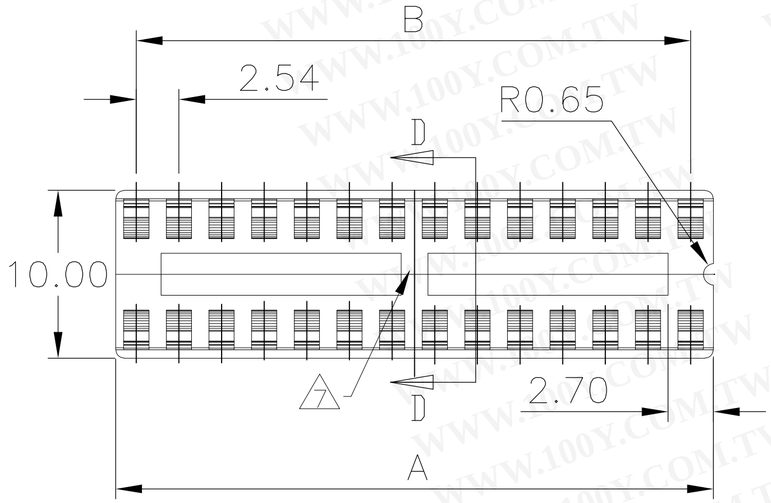

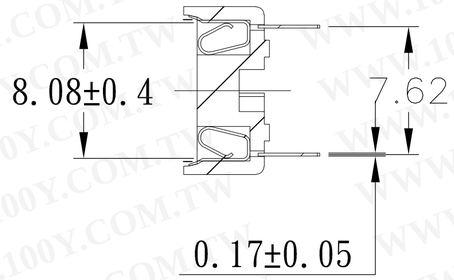

SECTION D-D

NOTE:

1. MATERIAL:
   HOUSING: 30% GLASS FILLED PBT, THERMOPLASTIC, BLACK.
   CONTACT: PHOS BRONZE

2. FINISH: CONTACT PLATING TIN (LEAD FREE); 60 UIN MIN. OVER 30 UIN Ni
   SOLDERABILITY :95% COVERAGE MIN.;
   WORKING CONDITION:230°±5°C MAX;

3. MECHANICAL SPECS:
   DURABILITY: 50 CYCLES MIN.
   INSERTION FORCE:300 GRAMS MAX.
   WITHDRAWAL FORCE: 20 GRAMS MIN.
   CONTACT RETENTION: 500 GRAMS MIN.
   ACCEPTS: 0.20–0.30 [.008–.012] LEADS

4. ELECTRICAL SPECS:
   VOLTAGE RATING: 250V AC,DC
   CONTACT RESISTANCE: 20 MILLOHMS MAX.
   CURRENT RATING: 1 AMPERE AC,DC
   INSULATION RESISTANCE: 1000 MEGOHMS MIN.
   DIELECTRIC WITHSTANDING VOLTAGE: AC 1000 V MIN.

5. OPERATING TEMPERATURE: –40°C TO +105°C

6. TE LOGO

7. LADDER PRESENT FOR 24, 28 & 32 POSITION SOCKETS.

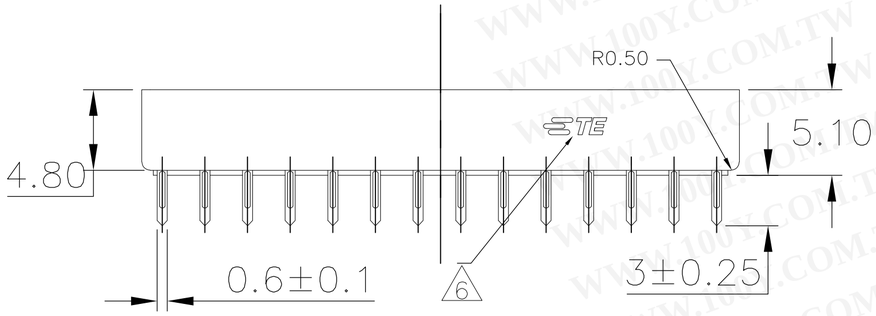

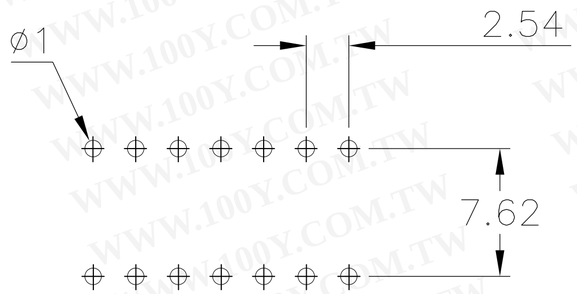

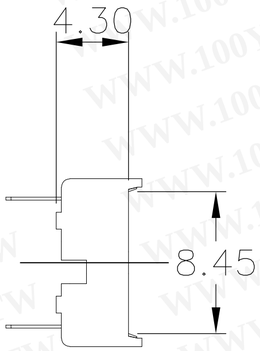

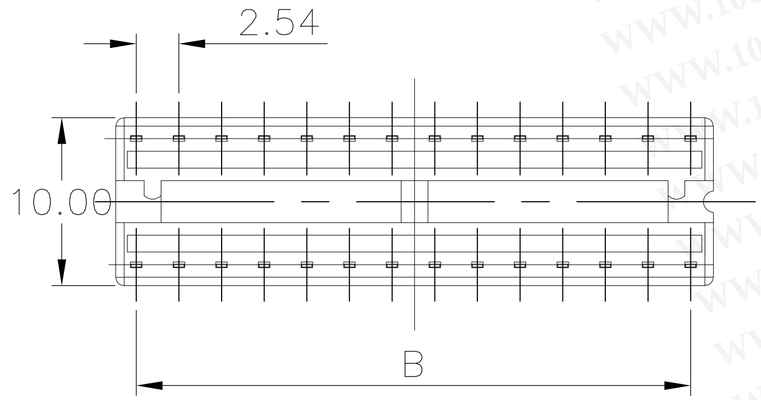

勝 特 力 材 料 886-3-5753170
胜特力电子(上海) 86-21-34970699
胜特力电子(深圳) 86-755-83298787
Http://www.100y.com.tw

FINISH	POS	A ±0.20	B±0.15	PART NO.
2	28	35.56	33.02	1–2199298–9
2	24	30.48	27.94	1–2199298–8
2	20	25.40	22.86	1–2199298–6
2	18	22.86	20.32	1–2199298–5
2	16	20.32	17.78	1–2199298–4
2	14	17.78	15.24	1–2199298–3
2	8	10.16	7.62	1–2199298–2
2	6	7.62	5.08	1–2199298–1

THIS DRAWING IS A CONTROLLED DOCUMENT.

DIMENSIONS: mm

TOLERANCES UNLESS OTHERWISE SPECIFIED:
0 PLC ± –
1 PLC ± –
2 PLC ± 0.2 [.008]
3 PLC ± –
4 PLC ± –
ANGLES ± –

MATERIAL 1
FINISH 2 & 3

DWN WINNG WANG 18NOV2013
CHK SOMIN LI 18NOV2013
APVD COREL WANG 18NOV2013
PRODUCT SPEC —
APPLICATION SPEC —
WEIGHT —

TE Connectivity

NAME DIP SOCKET, .300 CENTER LINE LADDER STYLE –

SIZE	CAGE CODE	DRAWING NO	RESTRICTED TO
A2	00779	C-2199298	—

CUSTOMER DRAWING | SCALE 4:1 | SHEET 1 OF 1 | REV A

2199298

1471-9 (3/11)