MOLDED TYPE WIRE WOUND CHIP INDUCTOR

(NLV - Series)

NLV Series

These revolutionary, highly reliable wound chip inductors for automatic mounting have been developed in response to the trend toward high density in electronic equipment. With metal terminals and a body of heat resistant resin, NLV Series (molded type) offers many superior features.

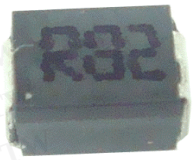

Feature

- Lead-free electrodes.
- Very strong solderability by reflow soldering and soldering iron or wave soldering.
- Highly accurate dimensions can be mounted automaticlly.
- Terminals are highly resistant to pull forces.
- High reliable in environments of sudden temperature change and humidity.
- Highly resistant to mechanical shocks and presure.
- Highly reliable in environments of sudden temperature change and humidity. Superior Q characteristics.

Applications

- Micro TVs, liquid crystal TVs, video cameras, protable VCRs, car radios,car stereos, thin radios, television tuners, mobile phones, radio and other electronic devices.

Product Identification

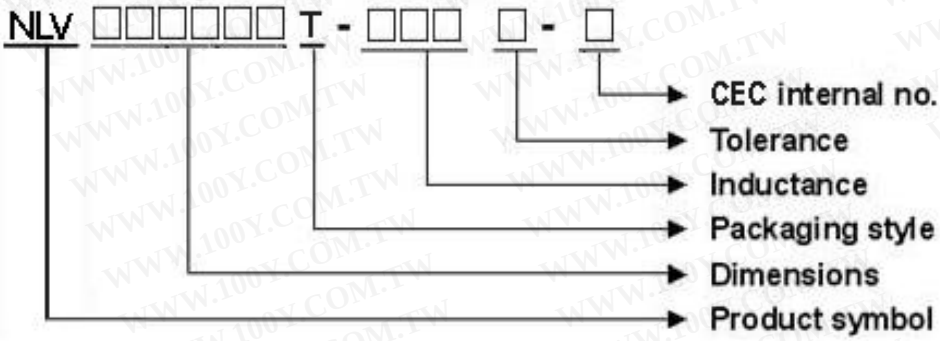

- Packaging Style: T: Tape and Reel; B: Bulk
- Tolerance: J=±5%;K=±10%
- Note: lead-free

勝 特 力 材 料 886-3-5753170
胜特力电子(上海) 86-21-34970699
胜特力电子(深圳) 86-755-83298787
Http://www.100y.com.tw

Shapes and Dimensions

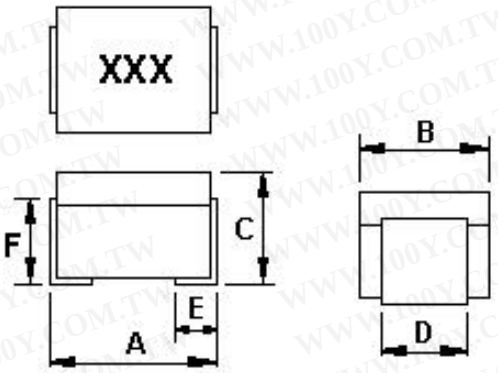

Unit: mm

TYPE	A	B	C	D	E	F
NLV 322522	3.2±0.2	2.5±0.2	2.2±0.2	1.7±0.2	0.7 ref	1.8 ref

Recommended Pattern

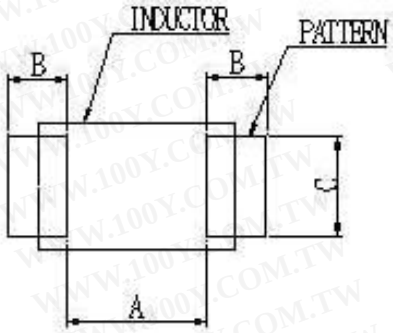

Unit: mm

TYPE	A	B	C
NLV 322522	1.6	1.2	2.0

勝 特 力 材 料 886-3-5753170
胜特力电子(上海) 86-21-34970699
胜特力电子(深圳) 86-755-83298787
Http://www.100y.com.tw

Electrical Characteristics

Part Number	Inductance (mH)	Tolerance (±%)	Q Min	Test Frequency (MHz)	Self Resonant Frequency (MHz) Min	DC Resistance (Ω) Max	IDC (mA)
NLV322522T-10N□-N	0.010	10	15	100	2500	0.13	450
NLV322522T-12N□-N	0.012	10	17	100	2300	0.14	450
NLV322522T-150N□-N	0.015	10	19	100	2100	0.16	450
NLV322522T-18N□-N	0.018	10	21	100	1900	0.18	450
NLV322522T-22N□-N	0.022	10	23	100	1700	0.20	450
NLV322522T-27N□-N	0.027	10	23	100	1500	0.22	450
NLV322522T-33N□-N	0.033	10	25	100	1400	0.24	450
NLV322522T-39N□-N	0.039	10	25	100	1300	0.27	450
NLV322522T-47N□-N	0.047	10	26	100	1200	0.30	450
NLV322522T-56N□-N	0.056	10	26	100	1100	0.33	450
NLV322522T-68N□-N	0.068	10	27	100	1000	0.36	450
NLV322522T-82N□-N	0.082	10	27	100	900	0.40	450
NLV322522T-R10□-N	0.10	10	28	100	700	0.44	450
NLV322522T-R12□-N	0.12	10	30	25.2	500	0.22	450
NLV322522T-R15□-N	0.15	10	30	25.2	450	0.25	450
NLV322522T-R18□-N	0.18	10	30	25.2	400	0.28	450
NLV322522T-R22□-N	0.22	10	30	25.2	350	0.32	450
NLV322522T-R27□-N	0.27	10	30	25.2	320	0.36	450
NLV322522T-R33□-N	0.33	10	30	25.2	300	0.40	450
NLV322522T-R39□-N	0.39	10	30	25.2	250	0.45	450
NLV322522T-R47□-N	0.47	10	30	25.2	220	0.50	450
NLV322522T-R56□-N	0.56	10	30	25.2	180	0.55	450
NLV322522T-R68□-N	0.68	10	30	25.2	160	0.60	450
NLV322522T-R82□-N	0.82	10	30	25.2	140	0.65	450
NLV322522T-1R0□-N	1.0	10/ 5	30	7.96	120	0.70	400
NLV322522T-1R2□-N	1.2	10/ 5	30	7.96	100	0.75	390
NLV322522T-1R5□-N	1.5	10/ 5	30	7.96	85	0.85	370
NLV322522T-1R8□-N	1.8	10/ 5	30	7.96	80	0.90	350
NLV322522T-2R2□-N	2.2	10/ 5	30	7.96	75	1.0	320
NLV322522T-2R7□-N	2.7	10/ 5	30	7.96	70	1.1	290
NLV322522T-3R3□-N	3.3	10/ 5	30	7.96	60	1.2	260
NLV322522T-3R9□-N	3.9	10/ 5	30	7.96	55	1.3	250
NLV322522T-4R7□-N	4.7	10/ 5	30	7.96	50	1.5	220
NLV322522T-5R6□-N	5.6	10/ 5	30	7.96	45	1.6	200
NLV322522T-6R8□-N	6.8	10/ 5	30	7.96	40	1.8	180
NLV322522T-8R2□-N	8.2	10/ 5	30	7.96	35	2.0	170
NLV322522T-100□-N	10	10/ 5	30	2.52	30	2.1	150
NLV322522T-120□-N	12	10/ 5	30	2.52	20	2.5	140
NLV322522T-150□-N	15	10/ 5	30	2.52	20	2.8	130
NLV322522T-180□-N	18	10/ 5	30	2.52	20	3.3	120
NLV322522T-220□-N	22	10/ 5	30	2.52	20	3.7	110
NLV322522T-270□-N	27	10/ 5	30	2.52	20	5.0	80
NLV322522T-330□-N	33	10/ 5	30	2.52	17	5.6	70
NLV322522T-390□-N	39	10/ 5	30	2.52	16	6.4	65
NLV322522T-470□-N	47	10/ 5	30	2.52	15	7.0	60

勝 特 力 材 料 886-3-5753170
胜特力电子(上海) 86-21-34970699
胜特力电子(深圳) 86-755-83298787
Http://www.100y.com.tw

NLV322522T-560□-N	56	10/ 5	30	2.52	13	8	55
NLV322522T-680□-N	68	10/ 5	30	2.52	12	9	50
NLV322522T-820□-N	82	10/ 5	30	2.52	11	10	45
NLV322522T-101□-N	100	10/ 5	20	0.796	10	10	40
NLV322522T-121□-N	120	10/ 5	20	0.796	10	11	70
NLV322522T-151□-N	150	10/ 5	20	0.796	8	15	65
NLV322522T-181□-N	180	10/ 5	20	0.796	7	17	60
NLV322522T-221□-N	220	10/ 5	20	0.796	7	21	50
NLV322522T-271□-N	270	10/ 5	20	0.796	6	28	45
NLV322522T-331□-N	330	10/ 5	20	0.796	5	34	40
NLV322522T-391□-N	390	10/ 5	20	0.796	5	36	35
NLV322522T-471□-N	470	10/ 5	20	0.796	4	40	25

- L、Q :HP4285A
- SRF : HP4291A
- RDC : CH502BC
- IDC : HO4284A+HP42841A
- Tolerance：J = ±5% / K = ±10%

勝 特 力 材 料 886-3-5753170
胜特力电子(上海) 86-21-34970699
胜特力电子(深圳) 86-755-83298787
Http://www.100y.com.tw

Test Instruments：HP4294A Impedance / Material Analyzer

Typical L vs. Frequency

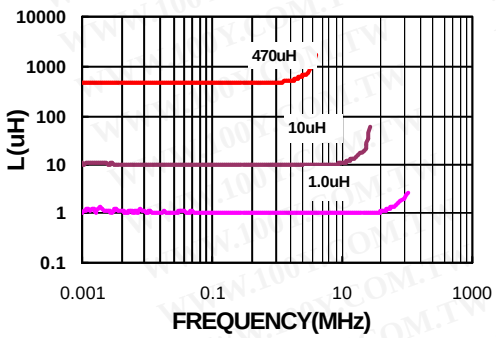

Typical Q vs. Frequency

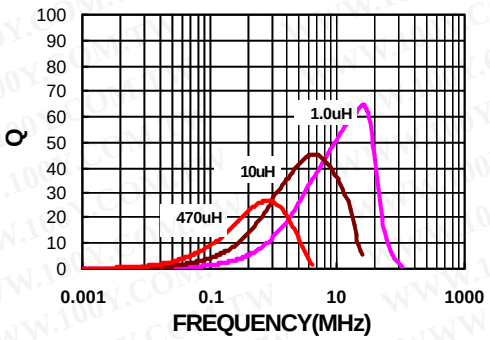

SMD Molded Type Wire Wound Ferrite Chip Inductors

NLV322522 Series

1-1.Mechanical Performances

No	Item	Specification	Test Method
1-1-1	Vibration	Appearance: No damage Inductance: within±10% of initial value Q change: within±30% of initial value	Test device shall be soldered on the substrate Oscillation Frequency: 10 to 55 to 10Hz for 1min Amplitude: 1.5mm Time: 2hrs for each axis (X, Y & Z), total 6hrs
1-1-2	Solder ability	The electrodes shall be at least 90% covered with new solder coating	Pre-heating: 150℃, 1min Solder Composition: Sn/Ag3.0/Cu0.5 Solder Temperature: 245±5℃ Immersion Time: 4±1sec

1-2.Environmental Performances

No	Item	Specification	Test Method
1-2-1	Temperature Cycle	Appearance: No damage Inductance: within±10% of initial value Q change: within±30% of initial value	One cycle: Step / Temperature (℃) / Time (min) 1 / -25±3 / 30 2 / 25±2 / 3 3 / 85±3 / 30 4 / 25±2 / 3 Total: 100cycles Measured after exposure in the room condition for 24hrs
1-2-2	Humidity Resistance		Temperature: 40±2℃ Relative Humidity: 90 ~ 95% Time: 1000hrs Measured after exposure in the room condition for 24hrs
1-2-3	High Temperature Resistance		Temperature: 85±3℃ Relative Humidity: 20% Applied Current: Rated Current Time: 1000hrs Measured after exposure in the room condition for 24hrs
1-2-4	Low Temperature Resistance		Temperature: -25±3℃ Relative Humidity: 0% Time: 1000hrs Measured after exposure in the room condition for 24hrs

勝 特 力 材 料 886-3-5753170
胜特力电子(上海) 86-21-34970699
胜特力电子(深圳) 86-755-83298787
Http://www.100y.com.tw

Packaging Specification

Tape Dimensions

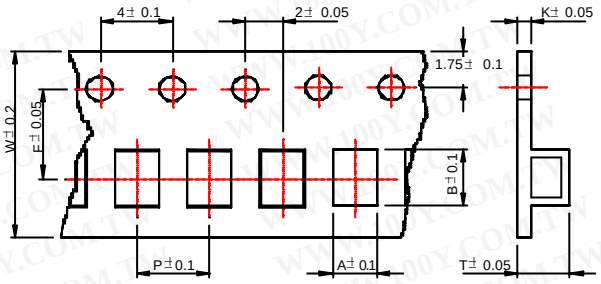

Tape Material

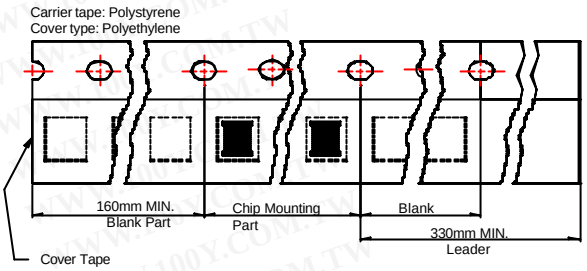

Reel Dimensions

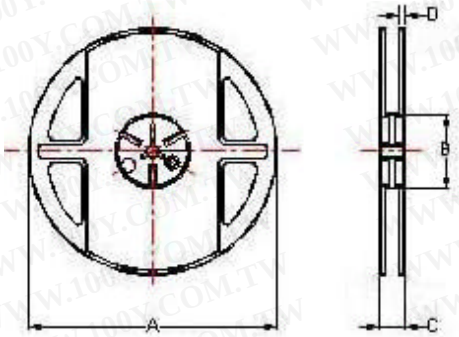

勝 特 力 材 料 886-3-5753170
胜特力电子(上海) 86-21-34970699
胜特力电子(深圳) 86-755-83298787
Http://www.100y.com.tw

Dimensions in mm

TYPE	Tape Dimensions							Reel Dimensions				Quantity PCS / Reel
	A	B	T	W	P	F	K	A	B	C	D	
NLV322522	2.96	3.60	2.4	8	4	3.5	0.23	178	60	12	1.5	2000