REV. 更改	DESCRIPTION 說明	ENG. 修改人	APPROVE 審核

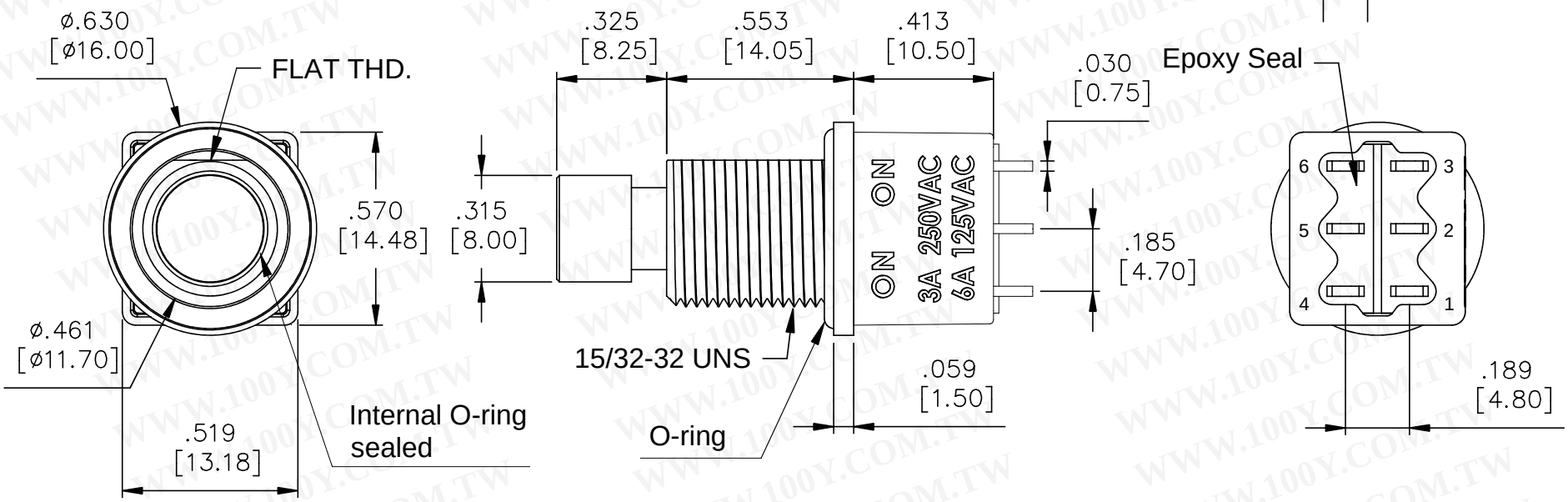

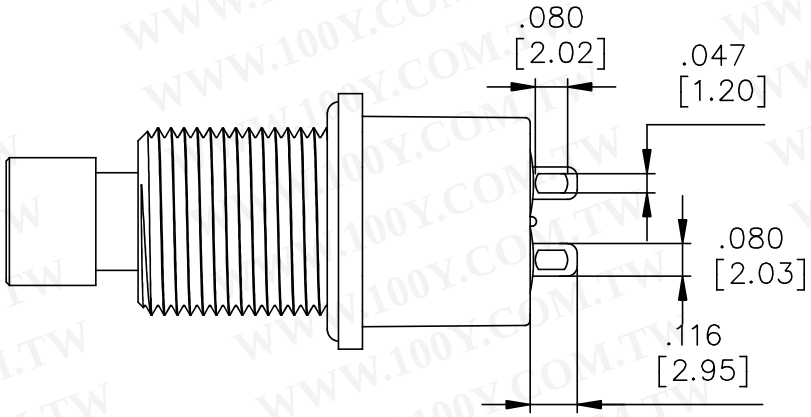

Model No.	Switching Position		
DP-1	ON	NONE	ON
Term. Comm.	2-3,5-6	OPEN	2-1,5-4

勝 特 力 材 料 886-3-5753170
胜特力电子(上海) 86-21-34970699
胜特力电子(深圳) 86-755-83298787
Http://www.100y.com.tw

SPECIFICATIONS:
1.MOVABLE CONTACT: Copper alloy, silver plated
2.TERMINALS: Copper alloy, gold over silver plated
3.RATING: 6A/3A @ 125VAC/250VAC or 28VDC
4.CONTACT RESISTANCE: 10m-ohms max. initial
5.INSULATION RESISTANCE: 1,000M-ohms min.
6.DIELECTRIC STRENGTH: 1,500V RMS @ sea level
7.ELECTRICAL LIFE: 50,000 make and break cycles at full load
8.OPERATING TEMPERATURE: -30°C to +85°C
8.BUSHING & PLUNGER: Brass, black nickel plated
9.IP67 Protection Class

ITEM NO. 料號	700H-DP-1-PJBJM1GE 7HDNPJBJ00M1GE

THESE DRAWINGS AND SPECIFICATIONS ARE THE PROPERTY OF TAIWAY ELECTRONICS LTD. AND SHALL NOT BE REPRODUCED COPIED OR USED IN ANY MANNER WITHOUT THE PRIOR WRITTEN CONSENT OF TAIWAY ELECTRONICS LTD.

UNLESS OTHERWISE SPECIFIED
DIMENSIONS ARE IN MILLIMETERS
ANGULAR TOLERANCE: ±1.0°

DIMENSIONS	TOLERANCE
0.00 TO 30.00mm	±0.20mm
30.01 TO 80.00mm	±0.25mm
80.01 TO 150.00mm	±0.30mm
150.01 ↑	±0.40mm

MATERIAL

USED 用途	700H	APPD. 審核	Amy 2010/09/30
FINISH 處理		CHKD. 校對	Amy 2010/09/30
SCALE 比例	2 / 1	UNIT. 單位 in(mm)	DR. 製圖 Amy 2010/09/30
TITLE 名稱	SEALED PUSHBUTTON SWITCH		
DWG NO. 圖號	700H-DP-1-PJBJM1GE		SIZE 圖紙 A4
FILE NAME 檔案名稱	7HDNJJ1GE.dwg	SHEET 張 1 / 1	REV. 更改 1

DATE: 99.09.301

文號: ER-013b