3 1/2 DIGITAL TEMPERATURE METER

CST-321

FEATURE

- Measuring T/C: K, J, T, E, R RTD: Pt100Ω
- Accuracy: T/C: ±0.25% , RTD: ±0.1%
- 3 1/2 Digital display: 1999 (Option range 199.99 in pt100Ω input)
- Easy-to-wire, screw type terminal
- Outside dimensions is 1/8 DIN standard (96x48 mm)
- High stability & low cost

MEASUREMENT

Measuring Range			Resolution	Input Impedance
Thermo-couple	K	0~1200 ℃	1 ℃	≧1M ohm
	J	0~750 ℃	1 ℃	≧1M ohm
	T	0~400 ℃	1 ℃	≧1M ohm
	E	0~1000 ℃	1 ℃	≧1M ohm
	R	400~1600 ℃	1 ℃	≧1M ohm
RTD	Pt100	-199.9~199.9 ℃	0.1 ℃	≧1M ohm
	Pt100	0~800 ℃	1 ℃	≧1M ohm

SPECIFICATION

Measuring accuracy:	T/C: ±0.25% F.S. ±1 digit
	RTD: ±0.1% F.S. ±1 digit
Span adjustment:	≦10% of R.O.
Zero adjustment:	≦2% of R.O.
Sampling time:	About 3 cycles/sec.
Polarity indication:	When input is negative " -"
Over-range indication:	" 1 " display
Operating temperature:	0~60 ℃
Operating relative humidity:	20~95 %RH
Temperature coefficient:	≦100 PPM/℃
	≦50 PPM/℃ (23 ±5 ℃)
Cold junction compensation:	25 ±10℃, error < 0.5 ℃)
Storage temperature:	-10~70 ℃
Power Supply:	AC 115/230V ±10%, 50/60 Hz
	Option: DC 12V, 24V, 48V ±10%
	(Isolated)
Power consumption:	DC 3W, AC 4.5VA
Dielectric Strength:	AC 2.0KV for 1 min (Between Power / Input)
	AC 3.0KV for 1 min
	Between (Terminal / Case)
Weight:	350g

勝 特 力 材 料 886-3-5753170
胜特力电子(上海) 86-21-54151736
胜特力电子(深圳) 86-755-83298787
Http://www.100y.com.tw

ADJUSTMENT

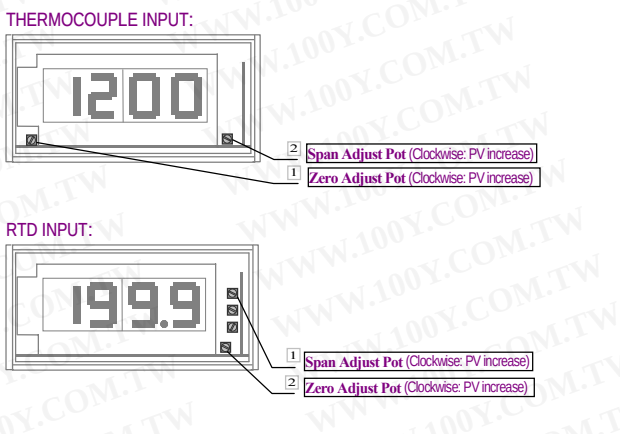

DIMENSIONS

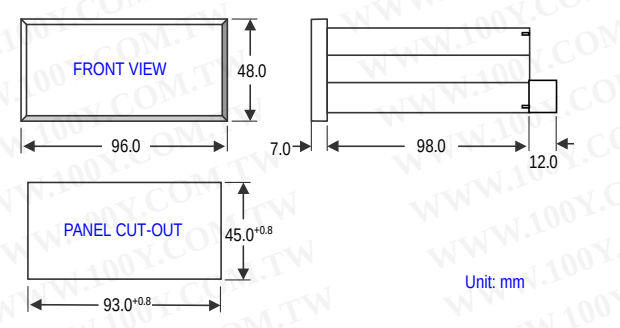

CONNECTION DIAGRAM

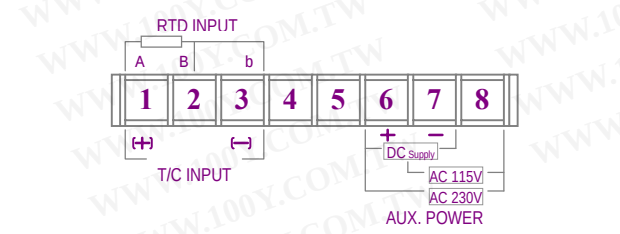

ORDER INFORMATION

CST-321 [Input Type] — [Input Range] — [Aux. Power]

CODE	INPUT TYPE
K	K type
J	J type
T	T type
E	E type
R	R type
P	Pt100Ω
O	Other

Thermocouple

CODE	INPUT RANGE
A	0~100 ℃
B	0~200 ℃
C	0~400 ℃
D	0~600 ℃
E	0~1000 ℃
F	0~1200 ℃
G	400~1600 ℃
O	Specify

Pt100Ω

CODE	INPUT RANGE
1	0~199.9 ℃
2	-50.0~50.0 ℃
3	-99.9~199.9
4	0~300 ℃
5	0~600 ℃
6	0~800 ℃
O	Specify

Aux. Power

CODE	AUX. POWER
A	AC 115/230 V
D12	DC 12 V
D24	DC 24 V
D48	DC 48 V
O	Specify