勝 特 力 材 料 886-3-5753170
胜特力电子(上海) 86-21-54151736
胜特力电子(深圳) 86-755-83298787
Http://www.100y.com.tw

SN54ALS74A, SN54AS74A, SN74ALS74A, SN74AS74A
DUAL POSITIVE-EDGE-TRIGGERED D-TYPE FLIP-FLOPS WITH CLEAR AND PRESET

SDAS143C – APRIL 1982 – REVISED AUGUST 1995

- **Package Options Include Plastic Small-Outline (D) Packages, Ceramic Chip Carriers (FK), and Standard Plastic (N) and Ceramic (J) 300-mil DIPs**

TYPE	TYPICAL MAXIMUM CLOCK FREQUENCY (C_L = 50 pF) (MHz)	TYPICAL POWER DISSIPATION PER FLIP-FLOP (mW)
′ALS74A	50	6
′AS74A	134	26

SN54ALS74A, SN54AS74A . . . J PACKAGE
SN74ALS74A, SN74AS74A . . . D OR N PACKAGE
(TOP VIEW)

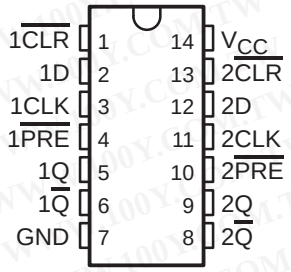

SN54ALS74A, SN54AS74A . . . FK PACKAGE
(TOP VIEW)

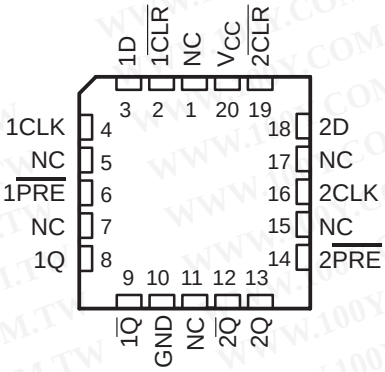

NC – No internal connection

description

These devices contain two independent positive-edge-triggered D-type flip-flops. A low level at the preset ($\overline{PRE}$) or clear ($\overline{CLR}$) inputs sets or resets the outputs regardless of the levels of the other inputs. When $\overline{PRE}$ and $\overline{CLR}$ are inactive (high), data at the data (D) input meeting the setup-time requirements are transferred to the outputs on the positive-going edge of the clock (CLK) pulse. Clock triggering occurs at a voltage level and is not directly related to the rise time of CLK. Following the hold-time interval, data at the D input can be changed without affecting the levels at the outputs.

The SN54ALS74A and SN54AS74A are characterized for operation over the full military temperature range of –55°C to 125°C. The SN74ALS74A and SN74AS74A are characterized for operation from 0°C to 70°C.

FUNCTION TABLE

INPUTS				OUTPUTS	
$\overline{PRE}$	$\overline{CLR}$	CLK	D	Q	$\overline{Q}$
L	H	X	X	H	L
H	L	X	X	L	H
L	L	X	X	H†	H†
H	H	↑	H	H	L
H	H	↑	L	L	H
H	H	L	X	Q_0	$\overline{Q}_0$

† The output levels in this configuration are not specified to meet the minimum levels for V_{OH} if the lows at $\overline{PRE}$ and $\overline{CLR}$ are near V_{IL} maximum. Furthermore, this configuration is nonstable; that is, it does not persist when $\overline{PRE}$ or $\overline{CLR}$ returns to its inactive (high) level.

PRODUCTION DATA information is current as of publication date. Products conform to specifications per the terms of Texas Instruments standard warranty. Production processing does not necessarily include testing of all parameters.

Copyright © 1995, Texas Instruments Incorporated

勝 特 力 材 料 886-3-5753170
胜特力电子(上海) 86-21-54151736
胜特力电子(深圳) 86-755-83298787
Http://www.100y.com.tw

logic symbol†

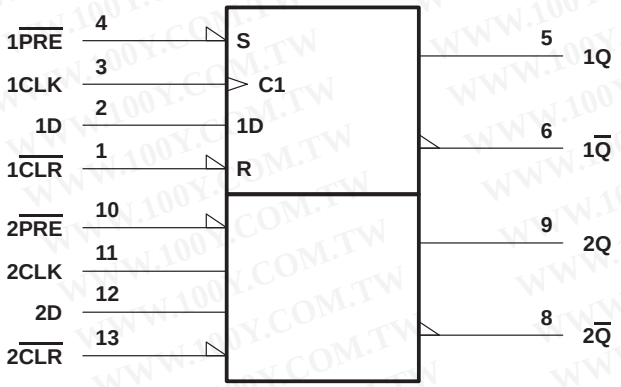

† This symbol is in accordance with ANSI/IEEE Std 91-1984 and IEC Publication 617-12.
Pin numbers shown are for the D, J, and N packages.

logic diagram (positive logic)

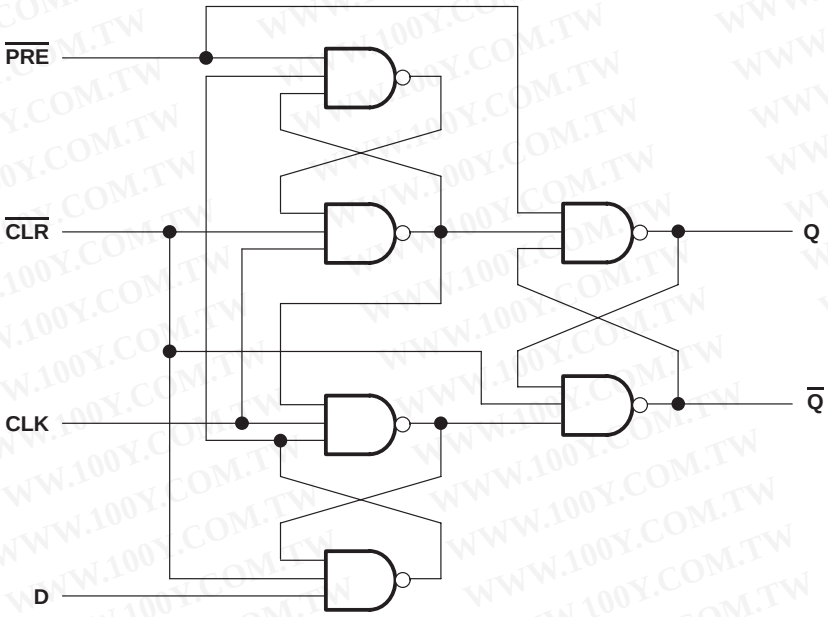

absolute maximum ratings over operating free-air temperature range (unless otherwise noted)‡

Supply voltage, V_{CC}		7 V
Input voltage, V_I		7 V
Operating free-air temperature range, T_A:	SN54ALS74A	–55°C to 125°C
	SN74ALS74A	0°C to 70°C
Storage temperature range		–65°C to 150°C

‡ Stresses beyond those listed under “absolute maximum ratings” may cause permanent damage to the device. These are stress ratings only, and functional operation of the device at these or any other conditions beyond those indicated under “recommended operating conditions” is not implied. Exposure to absolute-maximum-rated conditions for extended periods may affect device reliability.

勝 特 力 材 料 886-3-5753170
胜特力电子(上海) 86-21-54151736
胜特力电子(深圳) 86-755-83298787
Http://www.100y.com.tw

recommended operating conditions

			SN54ALS74A			SN74ALS74A			UNIT
			MIN	NOM	MAX	MIN	NOM	MAX	
V_{CC}	Supply voltage		4.5	5	5.5	4.5	5	5.5	V
V_{IH}	High-level input voltage		2			2			V
V_{IL}	Low-level input voltage				0.7			0.8	V
I_{OH}	High-level output current				–0.4			–0.4	mA
I_{OL}	Low-level output current				4			8	mA
f_{clock}	Clock frequency		0		25	0		34	MHz
t_w	Pulse duration	$\overline{PRE}$ or $\overline{CLR}$ low	15			15			ns
		CLK high	17.5			14.5			
		CLK low	17.5			14.5			
t_{su}	Setup time before CLK↑	Data	16			15			ns
		$\overline{PRE}$ or $\overline{CLR}$ inactive	10			10			
t_h	Hold time after CLK↑	Data	2			0			ns
T_A	Operating free-air temperature		–55		125	0		70	°C

electrical characteristics over recommended operating free-air temperature range (unless otherwise noted)

PARAMETER		TEST CONDITIONS		SN54ALS74A			SN74ALS74A			UNIT
				MIN	TYP†	MAX	MIN	TYP†	MAX	
V_{IK}		V_{CC} = 4.5 V,	I_I = –18 mA			–1.5			–1.5	V
V_{OH}		V_{CC} = 4.5 V to 5.5 V,	I_{OH} = –2 mA	V_{CC}–2			V_{CC}–2			V
V_{OL}		V_{CC} = 4.5 V	I_{OL} = 4 mA		0.25	0.4		0.25	0.4	V
			I_{OL} = 8 mA					0.35	0.5	
I_I	CLK or D	V_{CC} = 4.5 V,	V_I = 7 V			0.1			0.1	mA
	$\overline{PRE}$ or $\overline{CLR}$					0.2			0.2	
I_{IH}	CLK or D	V_{CC} = 4.5 V,	V_I = 2.7 V			20			20	µA
	$\overline{PRE}$ or $\overline{CLR}$					40			40	
I_{IL}	CLK or D	V_{CC} = 4.5 V,	V_I = 0.4 V			–0.2			–0.2	mA
	$\overline{PRE}$ or $\overline{CLR}$					–0.4			–0.4	
I_O‡		V_{CC} = 5.5 V,	V_O = 2.25 V	–20		–112	–30		–112	mA
I_{CC}		V_{CC} = 5.5 V,	See Note 1		2.4	4		2.4	4	mA

† All typical values are at V_{CC} = 5 V, T_A = 25°C.
‡ The output conditions have been chosen to produce a current that closely approximates one half of the true short-circuit output current, I_{OS}.
NOTE 1: I_{CC} is measured with D, CLK, and $\overline{PRE}$ grounded, then with D, CLK, and $\overline{CLR}$ grounded.

勝 特 力 材 料 886-3-5753170
胜特力电子(上海) 86-21-54151736
胜特力电子(深圳) 86-755-83298787
Http://www.100y.com.tw

switching characteristics (see Figure 1)

PARAMETER	FROM (INPUT)	TO (OUTPUT)	V_{CC} = 4.5 V to 5.5 V, C_L = 50 pF, R_L = 500 Ω, T_A = MIN to MAX†				UNIT
			SN54ALS74A		SN74ALS74A		
			MIN	MAX	MIN	MAX	
f_{max}			25		34		MHz
t_{PLH}	$\overline{PRE}$ or $\overline{CLR}$	Q or $\overline{Q}$	3	18	3	13	ns
t_{PHL}			5	17	5	15	
t_{PLH}	CLK	Q or Q	5	23	5	16	ns
t_{PHL}			5	20	5	18	

† For conditions shown as MIN or MAX, use the appropriate value specified under recommended operating conditions.

absolute maximum ratings over operating free-air temperature range (unless otherwise noted)‡

Supply voltage, V_{CC} . . . . . 7 V
Input voltage, V_I . . . . . 7 V
Operating free-air temperature range, T_A: SN54AS74A . . . . . –55°C to 125°C
SN74AS74A . . . . . 0°C to 70°C
Storage temperature range . . . . . –65°C to 150°C

‡ Stresses beyond those listed under “absolute maximum ratings” may cause permanent damage to the device. These are stress ratings only, and functional operation of the device at these or any other conditions beyond those indicated under “recommended operating conditions” is not implied. Exposure to absolute-maximum-rated conditions for extended periods may affect device reliability.

recommended operating conditions

			SN54AS74A			SN74AS74A			UNIT
			MIN	NOM	MAX	MIN	NOM	MAX	
V_{CC}	Supply voltage		4.5	5	5.5	4.5	5	5.5	V
V_{IH}	High-level input voltage		2			2			V
V_{IL}	Low-level input voltage				0.8			0.8	V
I_{OH}	High-level output current				–2			–2	mA
I_{OL}	Low-level output current				20			20	mA
f_{clock}*	Clock frequency		0		90	0		105	MHz
t_w*	Pulse duration	$\overline{PRE}$ or $\overline{CLR}$ low	4			4			ns
		CLK high	4			4			
		CLK low	5.5			5.5			
t_{su}*	Setup time before CLK↑	Data	4.5			4.5			ns
		$\overline{PRE}$ or $\overline{CLR}$ inactive	2			2			
t_h*	Hold time after CLK↑	Data	0			0			ns
T_A	Operating free-air temperature		–55		125	0		70	°C

* On products compliant to MIL-STD-833, Class B, this parameter is based on characterization data but is not production tested.

勝 特 力 材 料 886-3-5753170
胜特力电子(上海) 86-21-54151736
胜特力电子(深圳) 86-755-83298787
Http://www.100y.com.tw

electrical characteristics over recommended operating free-air temperature range (unless otherwise noted)

PARAMETER		TEST CONDITIONS		SN54AS74A			SN74AS74A			UNIT
				MIN	TYP†	MAX	MIN	TYP†	MAX	
V_{IK}		V_{CC} = 4.5 V,	I_I = –18 mA			–1.2			–1.2	V
V_{OH}		V_{CC} = 4.5 V to 5.5 V,	I_{OH} = –2 mA	V_{CC}–2			V_{CC}–2			V
V_{OL}		V_{CC} = 4.5 V,	I_{OL} = 20 mA		0.25	0.5		0.25	0.5	V
I_I		V_{CC} = 5.5 V,	V_I = 7 V			0.1			0.1	mA
I_{IH}	CLK or D	V_{CC} = 5.5 V,	V_I = 2.7 V			20			20	µA
	$\overline{PRE}$ or $\overline{CLR}$					40			40	
I_{IL}	CLK or D	V_{CC} = 5.5 V,	V_I = 0.4 V			–0.5			–0.5	mA
	$\overline{PRE}$ or $\overline{CLR}$					–1.8			–1.8	
I_O‡		V_{CC} = 5.5 V,	V_O = 2.25 V	–30		–112	–30		–112	mA
I_{CC}		V_{CC} = 5.5 V,	See Note 1		10.5	16		10.5	16	mA

† All typical values are at V_{CC} = 5 V, T_A = 25°C.
‡ The output conditions have been chosen to produce a current that closely approximates one half of the true short-circuit output current, I_{OS}.
NOTE 1: I_{CC} is measured with D, CLK, and $\overline{PRE}$ grounded, then with D, CLK, and $\overline{CLR}$ grounded.

switching characteristics (see Figure 1)

PARAMETER	FROM (INPUT)	TO (OUTPUT)	V_{CC} = 4.5 V to 5.5 V, C_L = 50 pF, R_L = 500 Ω, T_A = MIN to MAX§				UNIT
			SN54AS74A		SN74AS74A		
			MIN	MAX	MIN	MAX	
f_{max}*			90		105		MHz
t_{PLH}	$\overline{PRE}$ or $\overline{CLR}$	Q or $\overline{Q}$	2	9	2	7.5	ns
t_{PHL}			2.5	11.5	2.5	10.5	
t_{PLH}	CLK	Q or Q	2.5	10	3	8	ns
t_{PHL}			3.5	10.5	3	9	

* On products compliant to MIL-STD-833, Class B, this parameter is based on characterization data but is not production tested.
§ For conditions shown as MIN or MAX, use the appropriate value specified under recommended operating conditions.

勝 特 力 材 料 886-3-5753170
胜特力电子(上海) 86-21-54151736
胜特力电子(深圳) 86-755-83298787
Http://www.100y.com.tw

PARAMETER MEASUREMENT INFORMATION
SERIES 54ALS/74ALS AND 54AS/74AS DEVICES

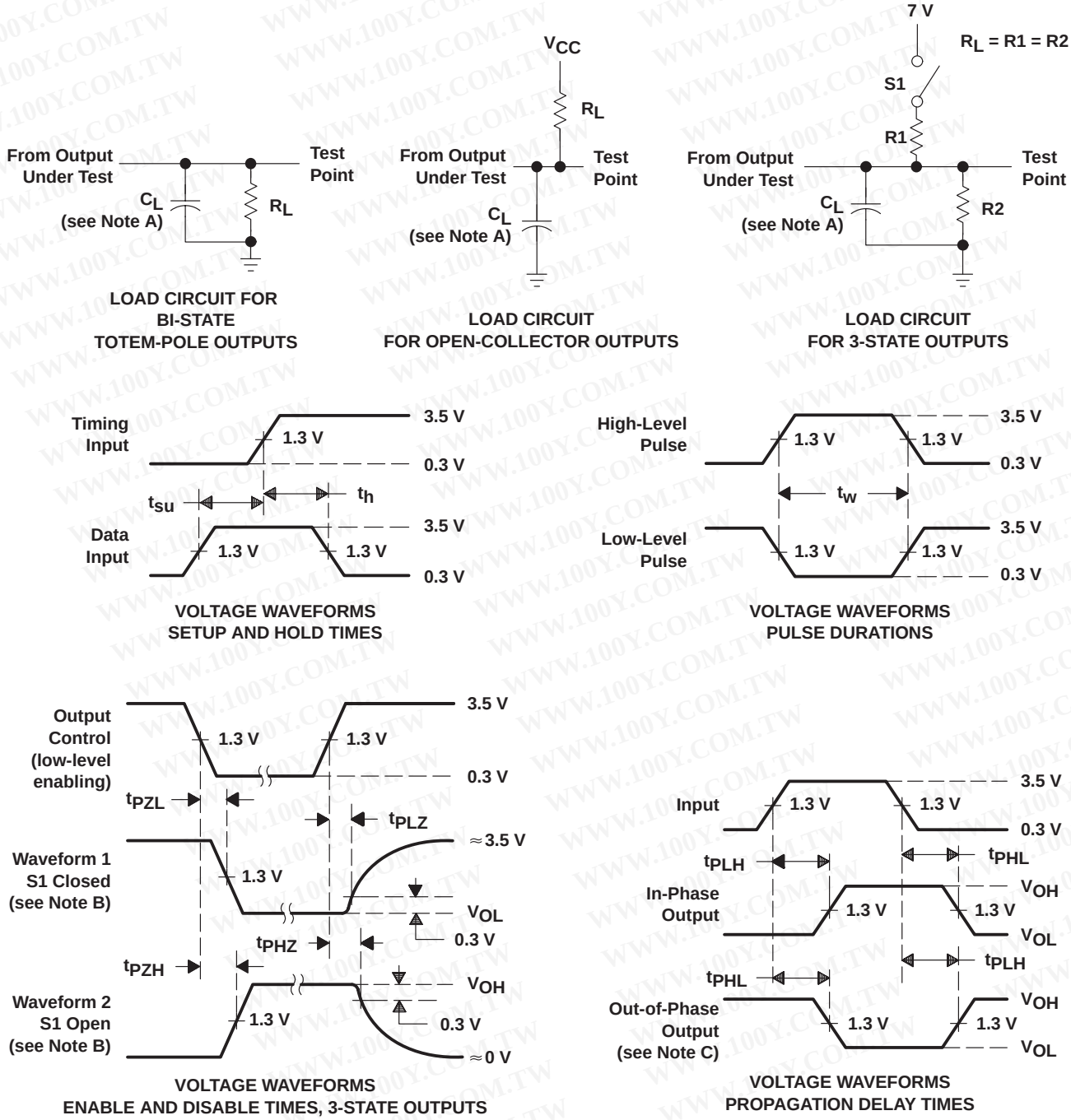

NOTES: A. C_L includes probe and jig capacitance.
B. Waveform 1 is for an output with internal conditions such that the output is low except when disabled by the output control. Waveform 2 is for an output with internal conditions such that the output is high except when disabled by the output control.
C. When measuring propagation delay items of 3-state outputs, switch S1 is open.
D. All input pulses have the following characteristics: PRR ≤ 1 MHz, $t_r = t_f = 2$ ns, duty cycle = 50%.
E. The outputs are measured one at a time with one transition per measurement.

Figure 1. Load Circuits and Voltage Waveforms