64K (8K x 8) Parallel EEPROMs

AT28C64
AT28C64X

Features

- Fast Read Access Time – 120 ns
- Fast Byte Write – 200 µs or 1 ms
- Self-timed Byte Write Cycle
  - Internal Address and Data Latches
  - Internal Control Timer
  - Automatic Clear Before Write
- Direct Microprocessor Control
  - READY/$\overline{\text{BUSY}}$ Open Drain Output
  - $\overline{\text{DATA}}$ Polling
- Low Power
  - 30 mA Active Current
  - 100 µA CMOS Standby Current
- High Reliability
  - Endurance: 10^4 or 10^5 Cycles
  - Data Retention: 10 Years
- 5V ± 10% Supply
- CMOS and TTL Compatible Inputs and Outputs
- JEDEC Approved Byte-wide Pinout
- Commercial and Industrial Temperature Ranges

Description

The AT28C64 is a low-power, high-performance 8,192 words by 8-bit nonvolatile electrically erasable and programmable read only memory with popular, easy-to-use features. The device is manufactured with Atmel's reliable nonvolatile technology.

(continued)

Pin Configurations

Pin Name	Function
A0 - A12	Addresses
$\overline{\text{CE}}$	Chip Enable
$\overline{\text{OE}}$	Output Enable
$\overline{\text{WE}}$	Write Enable
I/O0 - I/O7	Data Inputs/Outputs
RDY/$\overline{\text{BUSY}}$	Ready/$\overline{\text{Busy}}$ Output
NC	No Connect
DC	Don't Connect

PDIP, SOIC
Top View

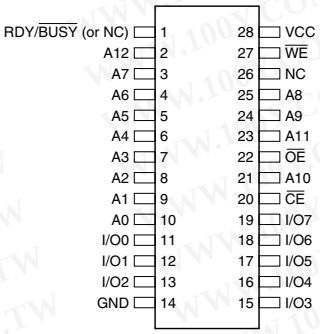

TSOP
Top View

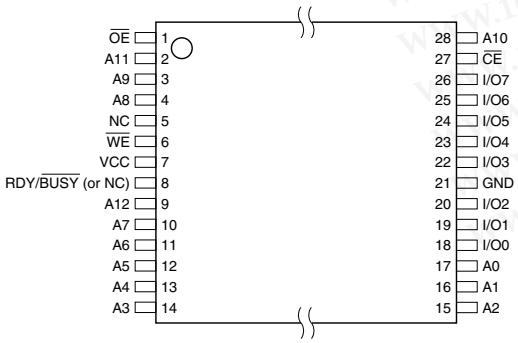

LCC, PLCC
Top View

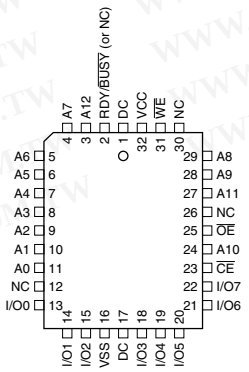

Note: PLCC package pins 1 and 17 are DON'T CONNECT.

Rev. 0001H–12/99

The AT28C64 is accessed like a Static RAM for the read or write cycles without the need for external components. During a byte write, the address and data are latched internally, freeing the microprocessor address and data bus for other operations. Following the initiation of a write cycle, the device will go to a busy state and automatically clear and write the latched data using an internal control timer. The device includes two methods for detecting the end of a write cycle, level detection of RDY/$\overline{BUSY}$ (unless pin 1 is N.C.) and $\overline{DATA}$ Polling of I/O_7. Once the end of a write cycle has been detected, a new access for a read or write can begin.

The CMOS technology offers fast access times of 120 ns at low power dissipation. When the chip is deselected the standby current is less than 100 µA.

Atmel's AT28C64 has additional features to ensure high quality and manufacturability. The device utilizes error correction internally for extended endurance and for improved data retention characteristics. An extra 32 bytes of EEPROM are available for device identification or tracking.

Block Diagram

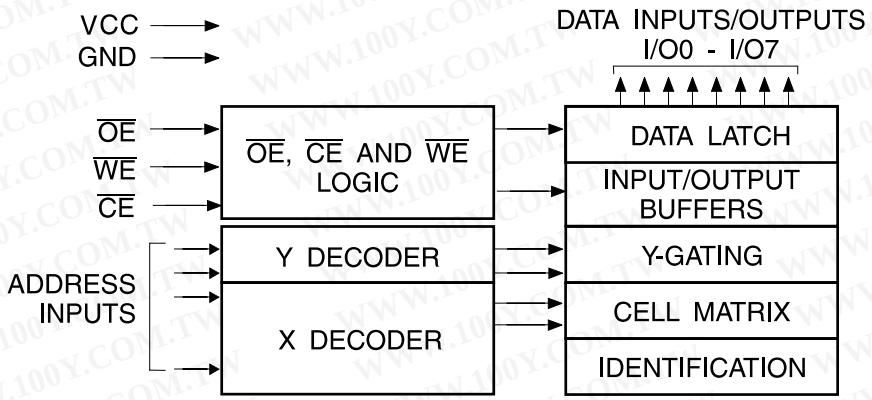

Absolute Maximum Ratings*

Temperature under Bias	-55°C to +125°C
Storage Temperature	-65°C to +150°C
All Input Voltages (including NC Pins) with Respect to Ground	-0.6V to +6.25V
All Output Voltages with Respect to Ground	-0.6V to V_{CC} + 0.6V
Voltage on $\overline{OE}$ and A9 with Respect to Ground	-0.6V to +13.5V

*NOTICE: Stresses beyond those listed under "Absolute Maximum Ratings" may cause permanent damage to the device. This is a stress rating only and functional operation of the device at these or any other conditions beyond those indicated in the operational sections of this specification is not implied. Exposure to absolute maximum rating conditions for extended periods may affect device reliability

Device Operation

READ: The AT28C64 is accessed like a Static RAM. When $\overline{CE}$ and $\overline{OE}$ are low and $\overline{WE}$ is high, the data stored at the memory location determined by the address pins is asserted on the outputs. The outputs are put in a high impedance state whenever $\overline{CE}$ or $\overline{OE}$ is high. This dual line control gives designers increased flexibility in preventing bus contention.

BYTE WRITE: Writing data into the AT28C64 is similar to writing into a Static RAM. A low pulse on the $\overline{WE}$ or $\overline{CE}$ input with $\overline{OE}$ high and $\overline{CE}$ or $\overline{WE}$ low (respectively) initiates a byte write. The address location is latched on the falling edge of $\overline{WE}$ (or $\overline{CE}$); the new data is latched on the rising edge. Internally, the device performs a self-clear before write. Once a byte write has been started, it will automatically time itself to completion. Once a programming operation has been initiated and for the duration of t_{WC}, a read operation will effectively be a polling operation.

FAST BYTE WRITE: The AT28C64E offers a byte write time of 200 µs maximum. This feature allows the entire device to be rewritten in 1.6 seconds.

READY/$\overline{BUSY}$: Pin 1 is an open drain RDY/$\overline{BUSY}$ output that can be used to detect the end of a write cycle. RDY/$\overline{BUSY}$ is actively pulled low during the write cycle and is released at the completion of the write. The open drain connection allows for OR-tying of several devices to the same RDY/$\overline{BUSY}$ line. The RDY/$\overline{BUSY}$ pin is not connected for the AT28C64X.

$\overline{DATA}$ POLLING: The AT28C64 provides $\overline{DATA}$ Polling to signal the completion of a write cycle. During a write cycle, an attempted read of the data being written results in the complement of that data for I/O_7 (the other outputs are indeterminate). When the write cycle is finished, true data appears on all outputs.

WRITE PROTECTION: Inadvertent writes to the device are protected against in the following ways: (a) V_{CC} sense – if V_{CC} is below 3.8V (typical) the write function is inhibited; (b) V_{CC} power on delay – once V_{CC} has reached 3.8V the device will automatically time out 5 ms (typical) before allowing a byte write; and (c) write inhibit – holding any one of $\overline{OE}$ low, $\overline{CE}$ high or $\overline{WE}$ high inhibits byte write cycles.

CHIP CLEAR: The contents of the entire memory of the AT28C64 may be set to the high state by the CHIP CLEAR operation. By setting $\overline{CE}$ low and $\overline{OE}$ to 12 volts, the chip is cleared when a 10 msec low pulse is applied to $\overline{WE}$.

DEVICE IDENTIFICATION: An extra 32 bytes of EEPROM memory are available to the user for device identification. By raising A9 to 12 ± 0.5V and using address locations 1FE0H to 1FFFH the additional bytes may be written to or read from in the same manner as the regular memory array.

DC and AC Operating Range

		AT28C64-12	AT28C64-15	AT28C64-20	AT28C64-25
Operating Temperature (Case)	Com.	0°C - 70°C	0°C - 70°C	0°C - 70°C	0°C - 70°C
	Ind.	-40°C - 85°C	-40°C - 85°C	-40°C - 85°C	-40°C - 85°C
V_{CC} Power Supply		5V ± 10%	5V ± 10%	5V ± 10%	5V ± 10%

Operating Modes

Mode	$\overline{CE}$	$\overline{OE}$	$\overline{WE}$	I/O
Read	V_{IL}	V_{IL}	V_{IH}	D_{OUT}
Write(2)	V_{IL}	V_{IH}	V_{IL}	D_{IN}
Standby/Write Inhibit	V_{IH}	X(1)	X	High Z
Write Inhibit	X	X	V_{IH}	
Write Inhibit	X	V_{IL}	X	
Output Disable	X	V_{IH}	X	High Z
Chip Erase	V_{IL}	V_H(3)	V_{IL}	High Z

Notes: 1. X can be V_{IL} or V_{IH}.
2. Refer to AC programming waveforms.
3. V_H = 12.0V ± 0.5V.

DC Characteristics

Symbol	Parameter	Condition		Min	Max	Units
I_{LI}	Input Load Current	V_{IN} = 0V to V_{CC} + 1V			10	µA
I_{LO}	Output Leakage Current	$V_{I/O}$ = 0V to V_{CC}			10	µA
I_{SB1}	V_{CC} Standby Current CMOS	$\overline{CE}$ = V_{CC} - 0.3V to V_{CC} + 1.0V			100	µA
I_{SB2}	V_{CC} Standby Current TTL	$\overline{CE}$ = 2.0V to V_{CC} + 1.0V	Com.		2	mA
			Ind.		3	mA
I_{CC}	V_{CC} Active Current AC	f = 5 MHz; I_{OUT} = 0 mA $\overline{CE}$ = V_{IL}	Com.		30	mA
			Ind.		45	mA
V_{IL}	Input Low Voltage				0.8	V
V_{IH}	Input High Voltage			2.0		V
V_{OL}	Output Low Voltage	I_{OL} = 2.1 mA = 4.0 mA for RDY/$\overline{BUSY}$			0.45	V
V_{OH}	Output High Voltage	I_{OH} = -400 µA		2.4		V

AC Read Characteristics

Symbol	Parameter	AT28C64-12		AT28C64-15		AT28C64-20		AT28C64-25		Units
		Min	Max	Min	Max	Min	Max	Min	Max	
t_{ACC}	Address to Output Delay		120		150		200		250	ns
t_{CE}(1)	$\overline{CE}$ to Output Delay		120		150		200		250	ns
t_{OE}(2)	$\overline{OE}$ to Output Delay	10	60	10	70	10	80	10	100	ns
t_{DF}(3)(4)	$\overline{CE}$ or $\overline{OE}$ High to Output Float	0	45	0	50	0	55	0	60	ns
t_{OH}	Output Hold from $\overline{OE}$, $\overline{CE}$ or Address, whichever occurred first	0		0		0		0		ns

AC Read Waveforms(1)(2)(3)(4)

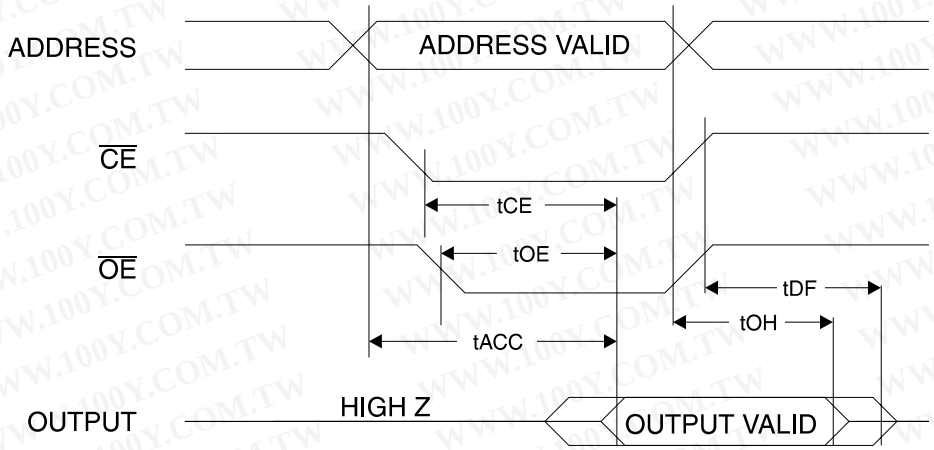

Notes:
1. $\overline{CE}$ may be delayed up to t_{ACC} - t_{CE} after the address transition without impact on t_{ACC}.
2. $\overline{OE}$ may be delayed up to t_{CE} - t_{OE} after the falling edge of $\overline{CE}$ without impact on t_{CE} or by t_{ACC} - t_{OE} after an address change without impact on t_{ACC}.
3. t_{DF} is specified from $\overline{OE}$ or $\overline{CE}$ whichever occurs first (C_L = 5 pF).
4. This parameter is characterized and is not 100% tested.

Input Test Waveforms and Measurement Level

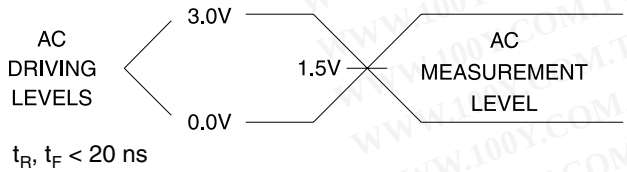

Output Test Load

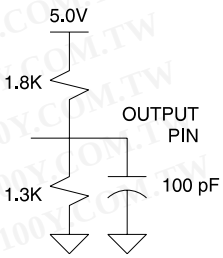

Pin Capacitance

f = 1 MHz, T = 25°C(1)

Symbol	Typ	Max	Units	Conditions
C_{IN}	4	6	pF	V_{IN} = 0V
C_{OUT}	8	12	pF	V_{OUT} = 0V

Note: 1. This parameter is characterized and is not 100% tested.

AC Write Characteristics

Symbol	Parameter		Min	Max	Units
t_{AS}, t_{OES}	Address, $\overline{OE}$ Setup Time		10		ns
t_{AH}	Address Hold Time		50		ns
t_{WP}	Write Pulse Width ($\overline{WE}$ or $\overline{CE}$)		100	1000	ns
t_{DS}	Data Setup Time		50		ns
t_{DH}, t_{OEH}	Data, $\overline{OE}$ Hold Time		10		ns
t_{CS}, t_{CH}	$\overline{CE}$ to $\overline{WE}$ and $\overline{WE}$ to $\overline{CE}$ Setup and Hold Time		0		ns
t_{DB}	Time to Device Busy			50	ns
t_{WC}	Write Cycle Time (option available)	AT28C64		1	ms
		AT28C64E		200	µs

AC Write Waveforms

$\overline{WE}$ Controlled

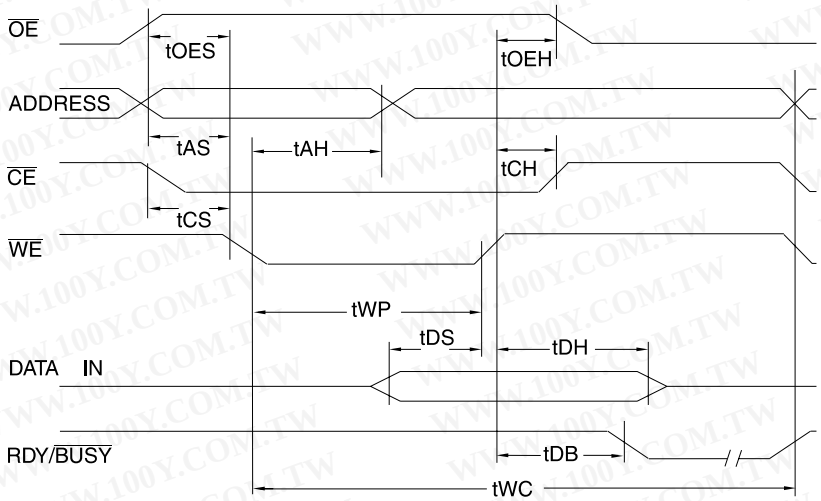

$\overline{CE}$ Controlled

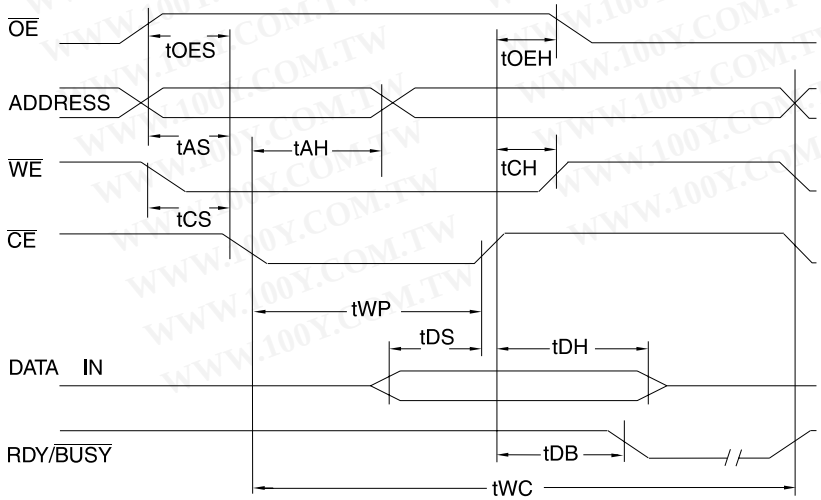

Data Polling Characteristics[1]

Symbol	Parameter	Min	Typ	Max	Units
t_{DH}	Data Hold Time	10			ns
t_{OEH}	$\overline{OE}$ Hold Time	10			ns
t_{OE}	$\overline{OE}$ to Output Delay[2]				ns
t_{WR}	Write Recovery Time	0			ns

Notes: 1. These parameters are characterized and not 100% tested.
2. See "AC Read Characteristics".

Data Polling Waveforms

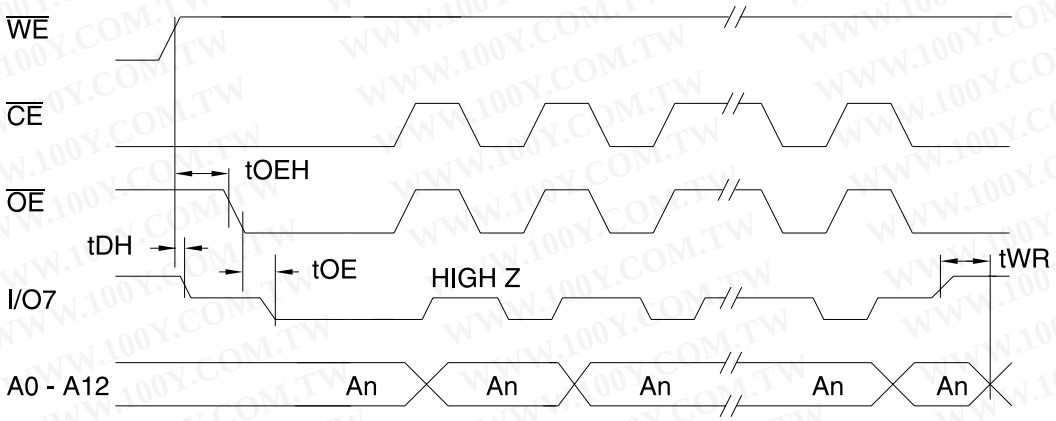

Chip Erase Waveforms

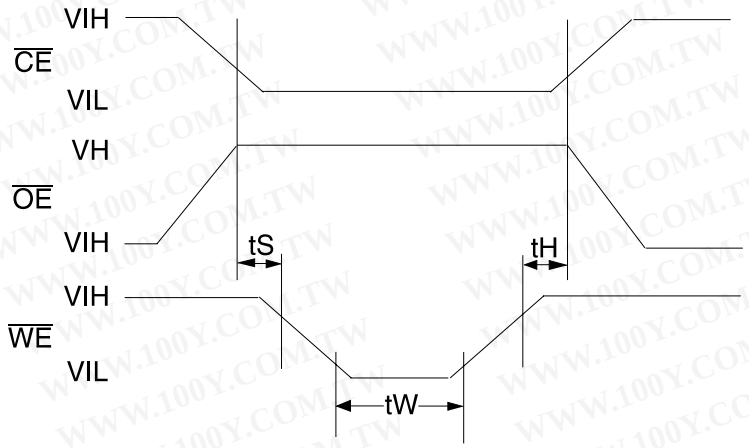

$t_S = t_H = 1$ µsec (min.)
$t_W = 10$ msec (min.)
$V_H = 12.0 \pm 0.5V$

NORMALIZED SUPPLY CURRENT vs. TEMPERATURE

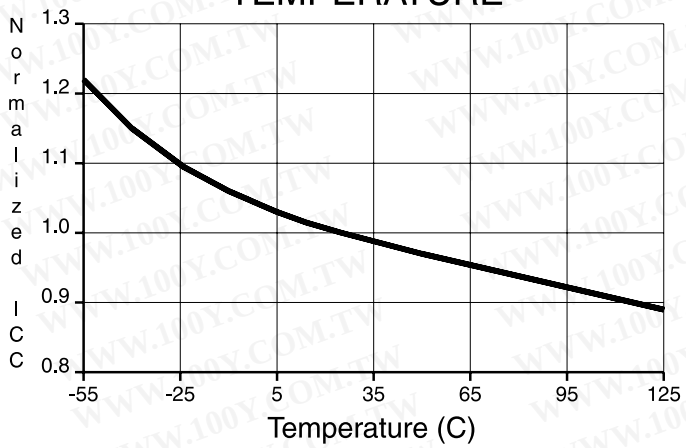

NORMALIZED SUPPLY CURRENT vs. SUPPLY VOLTAGE

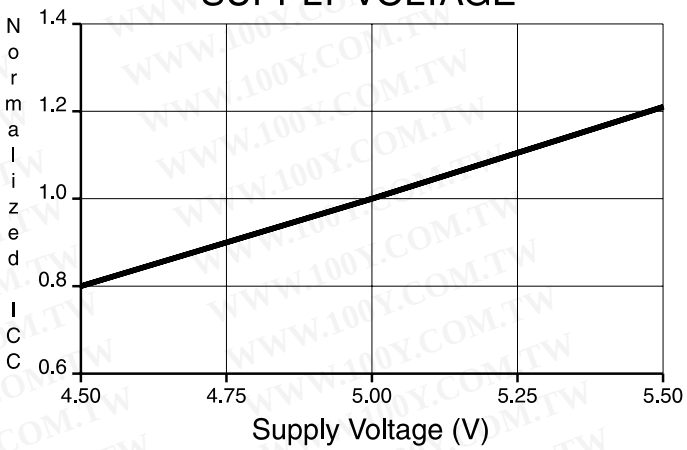

NORMALIZED SUPPLY CURRENT vs. ADDRESS FREQUENCY

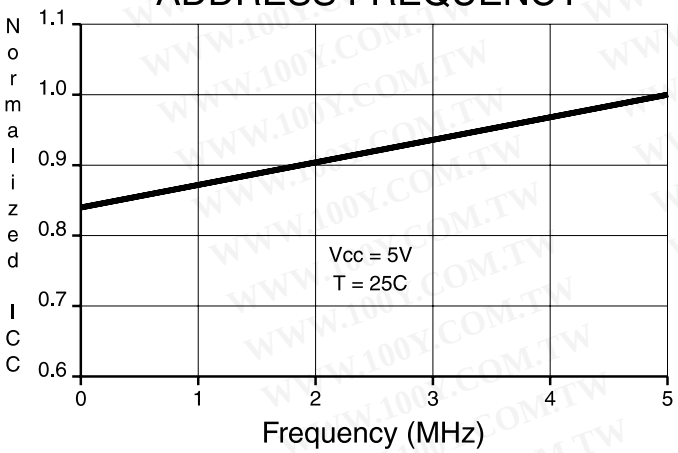

NORMALIZED ACCESS TIME vs. OUTPUT LOAD

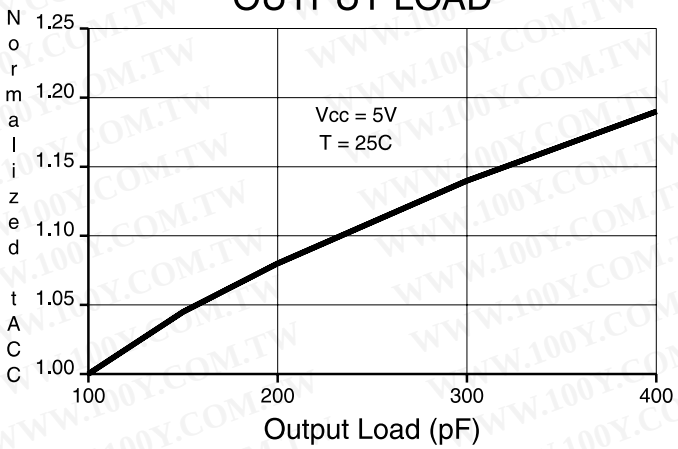

OUTPUT SINK CURRENT vs. OUTPUT VOLTAGE

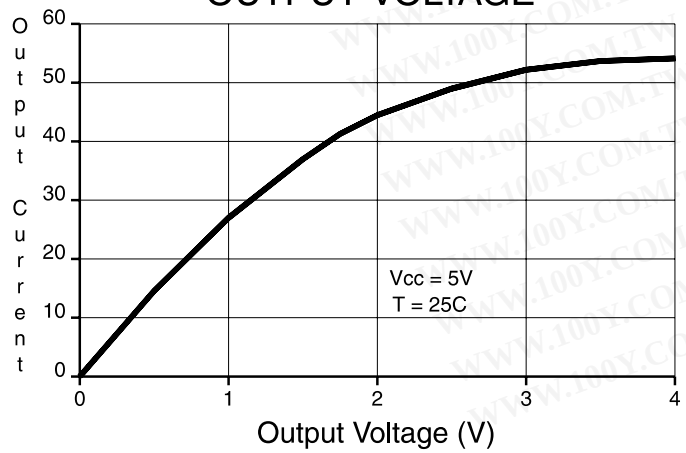

OUTPUT SOURCE CURRENT vs. OUTPUT VOLTAGE

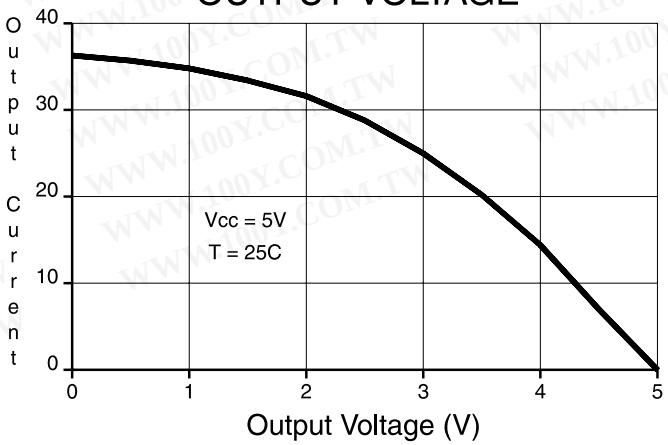

AT28C64 Ordering Information

t_{ACC} (ns)	I_{CC} (mA) Active	I_{CC} (mA) Standby	Ordering Code	Package	Operation Range
120	30	0.1	AT28C64(E)-12JC AT28C64(E)-12PC AT28C64(E)-12SC AT28C64(E)-12TC	32J 28P6 28S 28T	Commercial (0°C to 70°C)
	45	0.1	AT28C64(E)-12JI AT28C64(E)-12PI AT28C64(E)-12SI AT28C64(E)-12TI	32J 28P6 28S 28T	Industrial (-40°C to 85°C)
150	30	0.1	AT28C64(E)-15JC AT28C64(E)-15PC AT28C64(E)-15SC AT28C64(E)-15TC	32J 28P6 28S 28T	Commercial (0°C to 70°C)
	45	0.1	AT28C64(E)-15JI AT28C64(E)-15PI AT28C64(E)-15SI AT28C64(E)-15TI	32J 28P6 28S 28T	Industrial (-40°C to 85°C)
200	30	0.1	AT28C64(E)-20JC AT28C64(E)-20PC AT28C64(E)-20SC AT28C64(E)-20TC	32J 28P6 28S 28T	Commercial (0°C to 70°C)
	45	0.1	AT28C64(E)-20JI AT28C64(E)-20PI AT28C64(E)-20SI AT28C64(E)-20TI	32J 28P6 28S 28T	Industrial (-40°C to 85°C)
250	30	0.1	AT28C64(E)-25JC AT28C64(E)-25PC AT28C64(E)-25SC AT28C64(E)-25TC	32J 28P6 28S 28T	Commercial (0°C to 70°C)
	45	0.1	AT28C64(E)-25JI AT28C64(E)-25PI AT28C64(E)-25SI AT28C64(E)-25TI	32J 28P6 28S 28T	Industrial (-40°C to 85°C)

Package Type	
32J	32-lead, Plastic J-leaded Chip Carrier (PLCC)
28P6	28-lead, 0.600" Wide, Plastic Dull Inline Package (PDIP)
28S	28-lead, 0.300" Wide, Plastic Gull Wing, Small Outline (SOIC)
28T	28-lead, Plastic Thin Small Outline Package (TSOP)
Options	
Blank	Standard Device: Endurance = 10K Write Cycles; Write Time = 1 ms
E	High Endurance Option: Endurance = 100K Write Cycles; Write Time = 200 µs

AT28C64X Ordering Information

t_{ACC} (ns)	I_{CC} (mA) Active	I_{CC} (mA) Standby	Ordering Code	Package	Operation Range
150	30	0.1	AT28C64X-15JC AT28C64X-15PC AT28C64X-15SC AT28C64X-15TC	32J 28P6 28S 28T	Commercial (0°C to 70°C)
	45	0.1	AT28C64X-15JI AT28C64X-15PI AT28C64X-15SI AT28C64X-15TI	32J 28P6 28S 28T	Industrial (-40°C to 85°C)
200	30	0.1	AT28C64X-20JC AT28C64X-20PC AT28C64X-20SC AT28C64X-20TC	32J 28P6 28S 28T	Commercial (0°C to 70°C)
	45	0.1	AT28C64X-20JI AT28C64X-20PI AT28C64X-20SI AT28C64X-20TI	32J 28P6 28S 28T	Industrial (-40°C to 85°C)
250	30	0.1	AT28C64X-25JC AT28C64X-25PC AT28C64X-25SC AT28C64X-25TC	32J 28P6 28S 28T	Commercial (0°C to 70°C)
	45	0.1	AT28C64X-25JI AT28C64X-25PI AT28C64X-25SI AT28C64X-25TI	32J 28P6 28S 28T	Industrial (-40°C to 85°C)

Valid Part Numbers

The following table lists standard Atmel products that can be ordered.

Device Numbers	Speed	Package and Temperature Combinations
AT28C64 X	12	JC, JI, PC, PI, SC, SI, TC, TI
AT28C64 X	15	JC, JI, PC, PI, SC, SI, TC, TI
AT28C64 X	20	JC, JI, PC, PI, SC, SI, TC, TI
AT28C64 X	25	JC, JI, PC, PI, SC, SI, TC, TI

Die Products

Reference Section: Parallel EEPROM Die Products

Package Type	
32J	32-lead, Plastic J-leaded Chip Carrier (PLCC)
28P6	28-lead, 0.600" Wide, Plastic Dull Inline Package (PDIP)
28S	28-lead, 0.300" Wide, Plastic Gull Wing, Small Outline (SOIC)
28T	28-lead, Plastic Thin Small Outline Package (TSOP)

Packaging Information

32J, 32-lead, Plastic J-leaded Chip Carrier (PLCC)
Dimensions in Inches and (Millimeters)
JEDEC STANDARD MS-016 AE

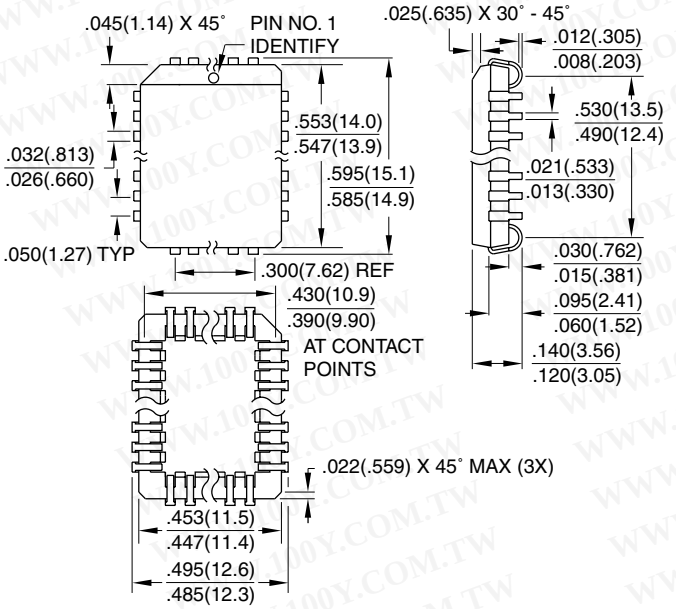

28P6, 28-lead, 0.600" Wide, Plastic Dual Inline Package (PDIP)
Dimensions in Inches and (Millimeters)
JEDEC STANDARD MS-011 AB

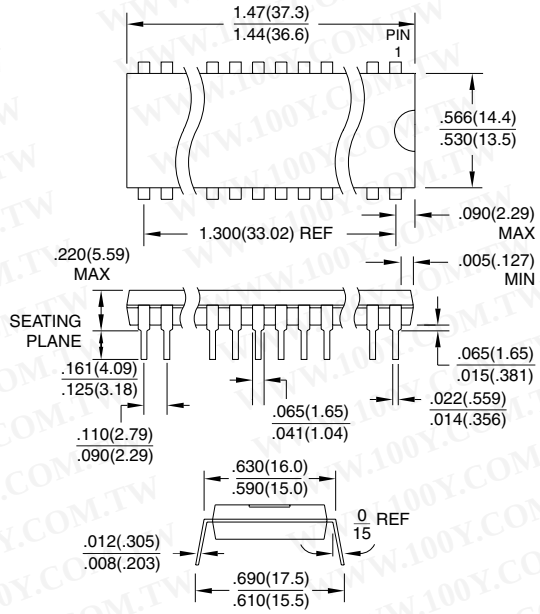

28S, 28-lead, 0.300" Wide, Plastic Gull Wing Small Outline (SOIC)
Dimensions in Inches and (Millimeters)

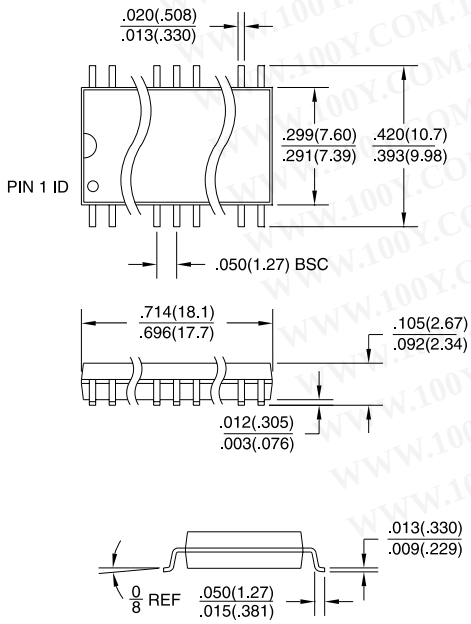

28T, 28-lead, Plastic Thin Small Outline Package (TSOP)
Dimensions in Millimeters and (Inches)*

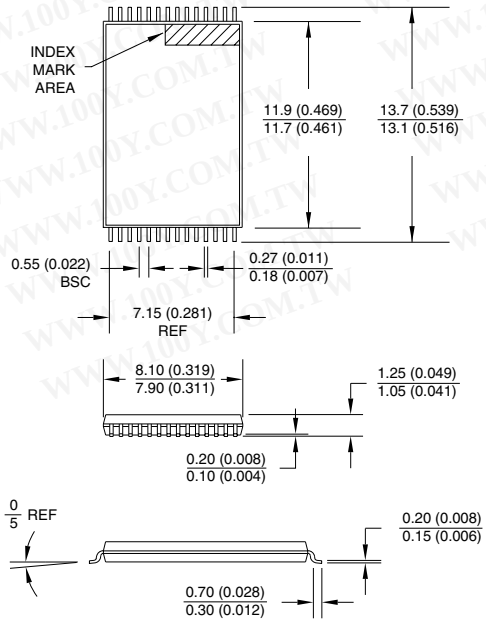

*Controlling dimension: millimeters