TEXAS INSTRUMENTS
Data sheet acquired from Harris Semiconductor
SCHS057C – Revised September 2003

# CD4073B, CD4081B, CD4082B Types

## CMOS AND Gates

High-Voltage Types (20-Volt Rating)

CD4073B Triple 3-Input AND Gate
CD4081B Quad 2-Input AND Gate
CD4082B Dual 4-Input AND Gate

■ CD4073B, CD4081B and CD4082B AND gates provide the system designer with direct implementation of the AND function and supplement the existing family of CMOS gates.

The CD4073B, CD4081B, and CD4082B types are supplied in 14-lead hermetic dual-in-line ceramic packages (F3A suffix), 14-lead dual-in-line plastic packages (E suffix), 14-lead small-outline packages (M, MT, M96, and NSR suffixes), and 14-lead thin shrink small-outline packages (PW and PWR suffixes).

*Features:*

- Medium-Speed Operation — $t_{PLH}$, $t_{PHL}$ = 60 ns (typ.) at $V_{DD}$ = 10 V
- 100% tested for quiescent current at 20 V
- Maximum input current of 1 μA at 18 V over full package-temperature range; 100 nA at 18 V and 25°C
- Noise margin (full package-temperature range) =
  1 V at $V_{DD}$ = 5 V
  2 V at $V_{DD}$ = 10 V
  2.5 V at $V_{DD}$ = 15 V
- Standardized, symmetrical output characteristics
- 5-V, 10-V, and 15-V parametric ratings
- Meets all requirements of JEDEC Tentative Standard No. 13B, "Standard Specifications for Description of 'B' Series CMOS Devices"

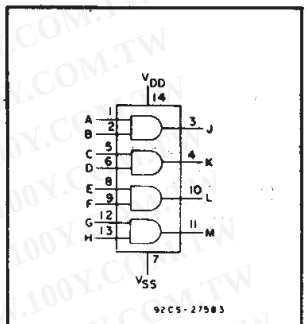


CD4081B
FUNCTIONAL DIAGRAM

勝 特 力 材 料 886-3-5753170
胜特力电子(上海) 86-21-54151736
胜特力电子(深圳) 86-755-83298787
Http://www.100y.com.tw

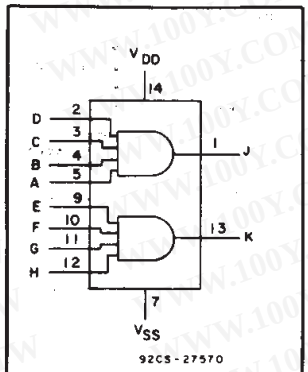


CD4082B
FUNCTIONAL DIAGRAM

**MAXIMUM RATINGS,** *Absolute-Maximum Values:*

DC SUPPLY-VOLTAGE RANGE, ($V_{DD}$)
Voltages referenced to $V_{SS}$ Terminal) ..... -0.5V to +20V
INPUT VOLTAGE RANGE, ALL INPUTS ..... -0.5V to $V_{DD}$ +0.5V
DC INPUT CURRENT, ANY ONE INPUT ..... ±10mA
POWER DISSIPATION PER PACKAGE ($P_D$):
For $T_A$ = -55°C to +100°C ..... 500mW
For $T_A$ = +100°C to +125°C ..... Derate Linearity at 12mW/°C to 200mW
DEVICE DISSIPATION PER OUTPUT TRANSISTOR
FOR $T_A$ = FULL PACKAGE-TEMPERATURE RANGE (All Package Types) ..... 100mW
OPERATING-TEMPERATURE RANGE ($T_A$) ..... -55°C to +125°C
STORAGE TEMPERATURE RANGE ($T_{stg}$) ..... -65°C to +150°C
LEAD TEMPERATURE (DURING SOLDERING):
At distance 1/16 ± 1/32 inch (1.59 ± 0.79mm) from case for 10s max ..... +265°C

**RECOMMENDED OPERATING CONDITIONS**

*For maximum reliability, nominal operating conditions should be selected so that operation is always within the following ranges:*

| CHARACTERISTIC | LIMITS | | UNITS |
|---|---|---|---|
| | MIN. | MAX. | |
| Supply-Voltage Range (For $T_A$ = Full Package Temperature Range) | 3 | 18 | V |

**DYNAMIC ELECTRICAL CHARACTERISTICS at $T_A$=25°C, Input $t_r$,$t_f$=20 ns, and $C_L$=50 pF, $R_L$=200 kΩ**

| CHARACTERISTIC | TEST CONDITIONS | | ALL TYPES LIMITS | | UNITS |
|---|---|---|---|---|---|
| | | $V_{DD}$ Volts | TYP. | MAX. | |
| Propagation Delay Time, $t_{PHL}$, $t_{PLH}$ | | 5<br>10<br>15 | 125<br>60<br>45 | 250<br>120<br>90 | ns |
| Transition Time, $t_{THL}$, $t_{TLH}$ | | 5<br>10<br>15 | 100<br>50<br>40 | 200<br>100<br>80 | ns |
| Input Capacitance, $C_{IN}$ | Any Input | – | 5 | 7.5 | pF |

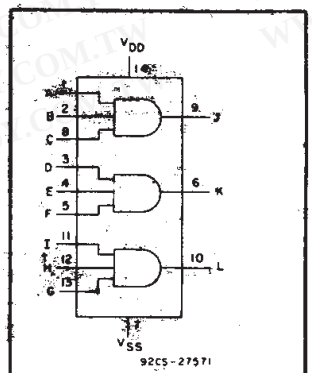


CD4073B
FUNCTIONAL DIAGRAM

Copyright © 2003, Texas Instruments Incorporated

勝 特 力 材 料 886-3-5753170
胜特力电子(上海) 86-21-54151736
胜特力电子(深圳) 86-755-83298787
Http://www.100y.com.tw



## STATIC ELECTRICAL CHARACTERISTICS

| CHARACTERISTIC | CONDITIONS | | | LIMITS AT INDICATED TEMPERATURES (°C) | | | | | | | UNITS |
|---|---|---|---|---|---|---|---|---|---|---|---|
| | $V_O$ (V) | $V_{IN}$ (V) | $V_{DD}$ (V) | −55 | −40 | +85 | +125 | +25 Min. | +25 Typ. | +25 Max. | |
| Quiescent Device Current, $I_{DD}$ Max. | – | 0,5 | 5 | 0.25 | 0.25 | 7.5 | 7.5 | – | 0.01 | 0.25 | μA |
| | – | 0,10 | 10 | 0.5 | 0.5 | 15 | 15 | – | 0.01 | 0.5 | |
| | – | 0,15 | 15 | 1 | 1 | 30 | 30 | – | 0.01 | 1 | |
| | – | 0,20 | 20 | 5 | 5 | 150 | 150 | – | 0.02 | 5 | |
| Output Low (Sink) Current $I_{OL}$ Min. | 0.4 | 0,5 | 5 | 0.64 | 0.61 | 0.42 | 0.36 | 0.51 | 1 | – | mA |
| | 0.5 | 0,10 | 10 | 1.6 | 1.5 | 1.1 | 0.9 | 1.3 | 2.6 | – | |
| | 1.5 | 0,15 | 15 | 4.2 | 4 | 2.8 | 2.4 | 3.4 | 6.8 | – | |
| Output High (Source) Current, $I_{OH}$ Min. | 4.6 | 0,5 | 5 | −0.64 | −0.61 | −0.42 | −0.36 | −0.51 | −1 | – | |
| | 2.5 | 0,5 | 5 | −2 | −1.8 | −1.3 | −1.15 | −1.6 | −3.2 | – | |
| | 9.5 | 0,10 | 10 | −1.6 | −1.5 | −1.1 | −0.9 | −1.3 | −2.6 | – | |
| | 13.5 | 0,15 | 15 | −4.2 | −4 | −2.8 | −2.4 | −3.4 | −6.8 | – | |
| Output Voltage: Low-Level, $V_{OL}$ Max. | – | 0,5 | 5 | 0.05 | | | | – | 0 | 0.05 | V |
| | – | 0,10 | 10 | 0.05 | | | | – | 0 | 0.05 | |
| | – | 0,15 | 15 | 0.05 | | | | – | 0 | 0.05 | |
| Output Voltage: High-Level, $V_{OH}$ Min. | – | 0,5 | 5 | 4.95 | | | | 4.95 | 5 | – | |
| | – | 0,10 | 10 | 9.95 | | | | 9.95 | 10 | – | |
| | – | 0,15 | 15 | 14.95 | | | | 14.95 | 15 | – | |
| Input Low Voltage, $V_{IL}$ Max. | 0.5 | – | 5 | 1.5 | | | | — | — | 1.5 | V |
| | 1 | – | 10 | 3 | | | | — | — | 3 | |
| | 1.5 | – | 15 | 4 | | | | — | — | 4 | |
| Input High Voltage, $V_{IH}$ Min. | 0.5,4.5 | – | 5 | 3.5 | | | | 3.5 | — | — | |
| | 1,9 | – | 10 | 7 | | | | 7 | — | — | |
| | 1.5,13.5 | – | 15 | 11 | | | | 11 | — | — | |
| Input Current $I_{IN}$ Max. | | 0,18 | 18 | ±0.1 | ±0.1 | ±1 | ±1 | – | $\pm 10^{-5}$ | ±0.1 | μA |

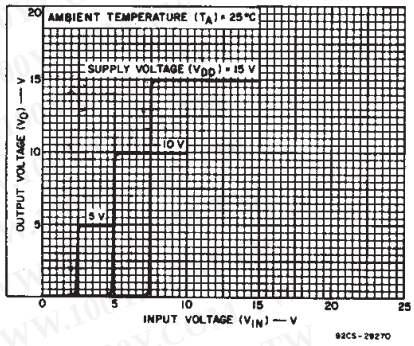


*Fig. 3 — Typical voltage transfer characteristics.*

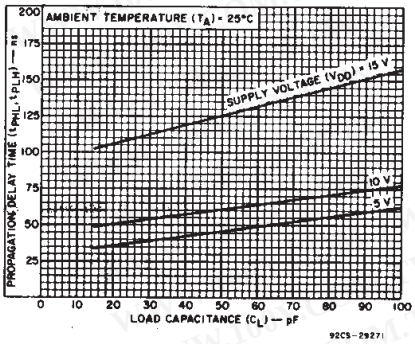


*Fig. 4 — Typical propagation delay time as a function of load capacitance.*

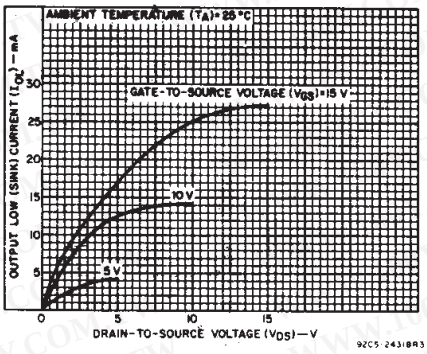


*Fig. 5 — Typical output low (sink) current characteristics.*

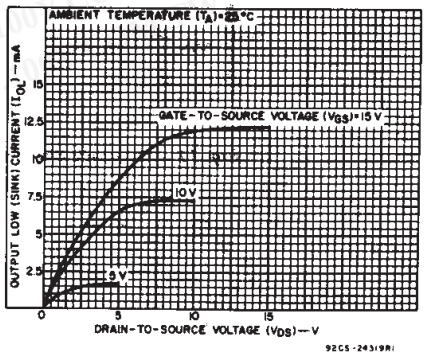


*Fig. 6 — Minimum output low (sink) current characteristics.*

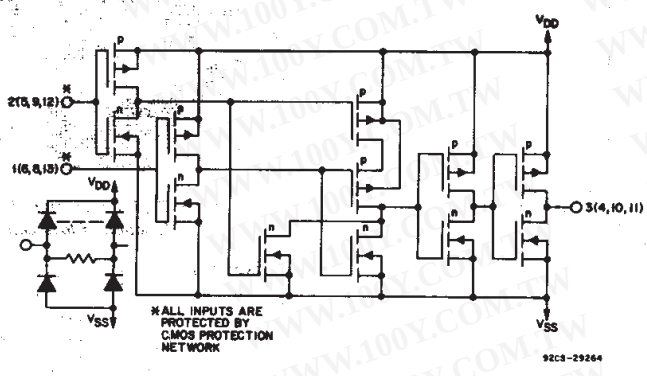


*Fig. 1 — Schematic diagram for CD4081B (1 of 4 identical gates).*

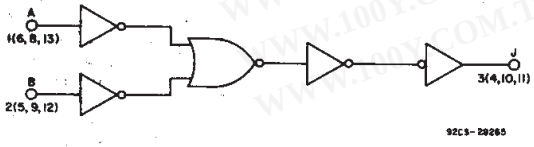


*Fig. 2 — Logic diagram for CD4081B (1 of 4 identical gates).*

勝 特 力 材 料 886-3-5753170
胜特力电子(上海) 86-21-54151736
胜特力电子(深圳) 86-755-83298787
Http://www.100y.com.tw



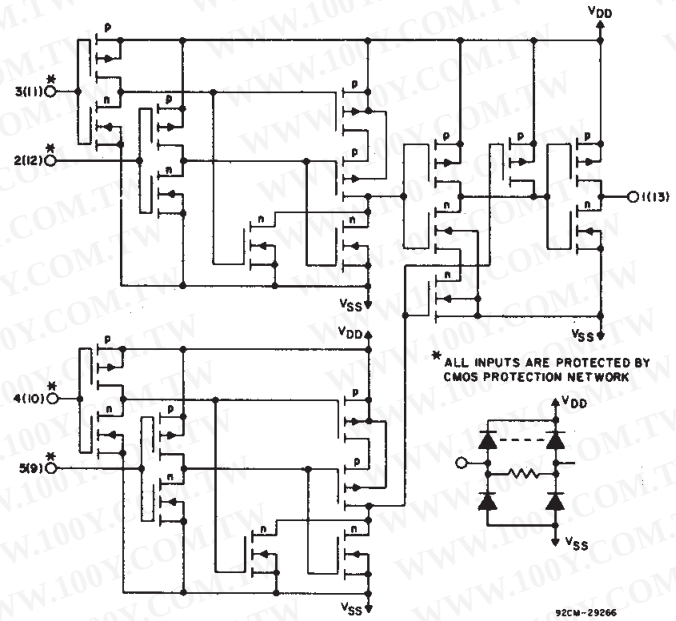


Fig. 7 — Schematic diagram for CD4082B (1 of 2 identical gates).

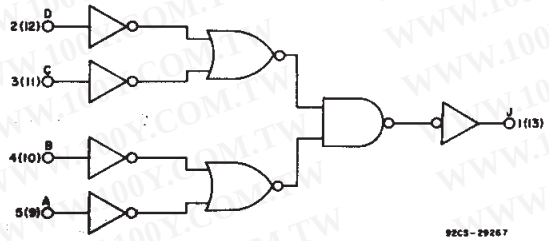


Fig. 9 — Logic diagram for CD4082B (1 of 2 identical gates).

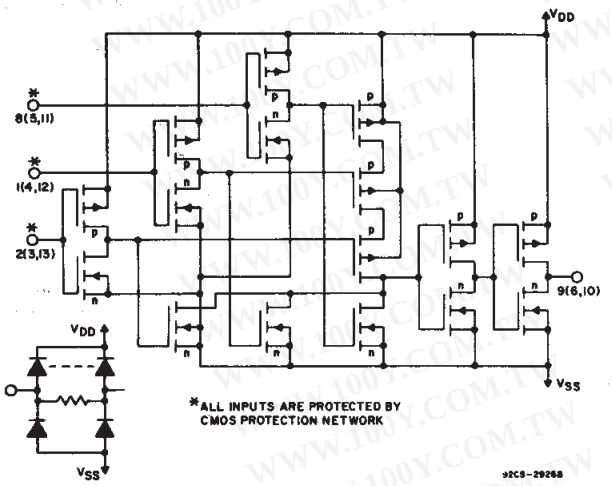


Fig. 11 — Schematic diagram for CD4073B (1 of 3 identical gates).

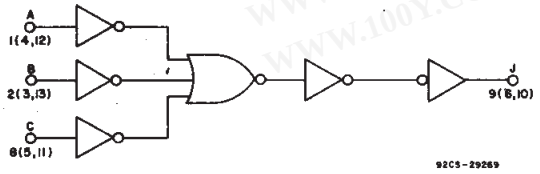


Fig. 13 — Logic diagram for CD4073B (1 of 3 identical gates).

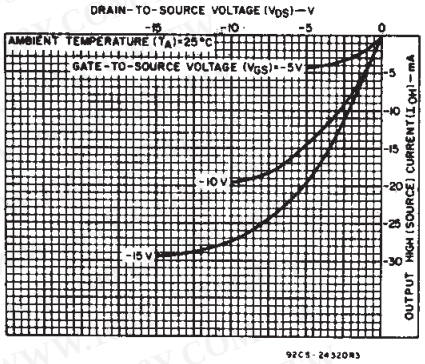


Fig. 8 — Typical output high (source) current characteristics.

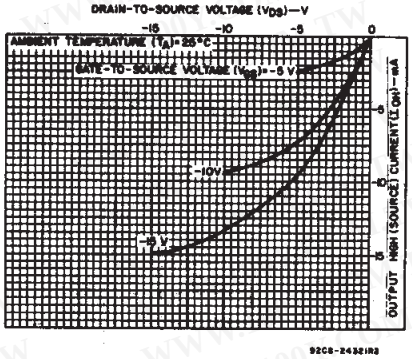


Fig. 10 — Minimum output high (source) current characteristics.

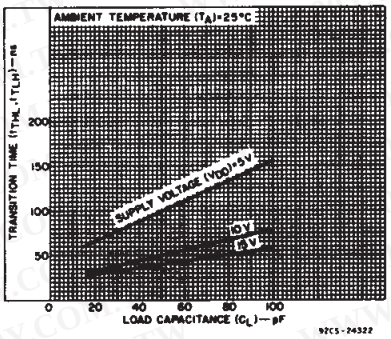


Fig. 12 — Typical transition time as a function of load capacitance

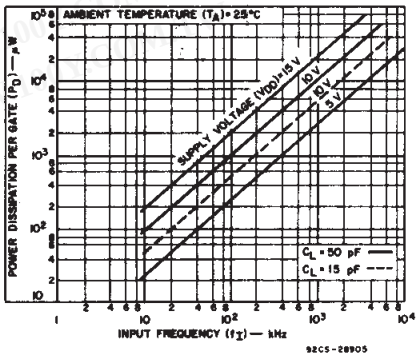


Fig. 14 — Typical dynamic power dissipation per gate as a function of frequency.

勝 特 力 材 料 886-3-5753170
胜特力电子(上海) 86-21-54151736
胜特力电子(深圳) 86-755-83298787
Http://www.100y.com.tw



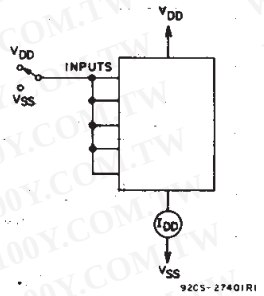


*Fig. 15 — Quiescent device current test circuit.*

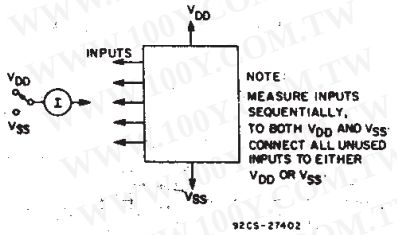


*Fig. 16 — Input current test circuit.*

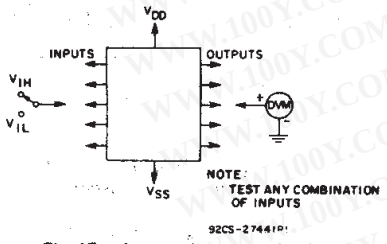


*Fig. 17 — Input-voltage test circuit.*

## TERMINAL ASSIGNMENTS

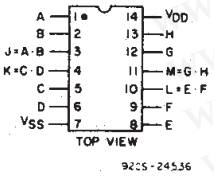


**CD4081B**

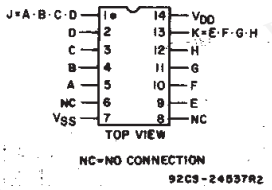


**CD4082B**

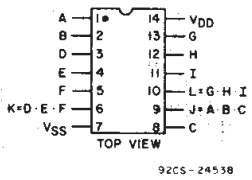


**CD4073B**

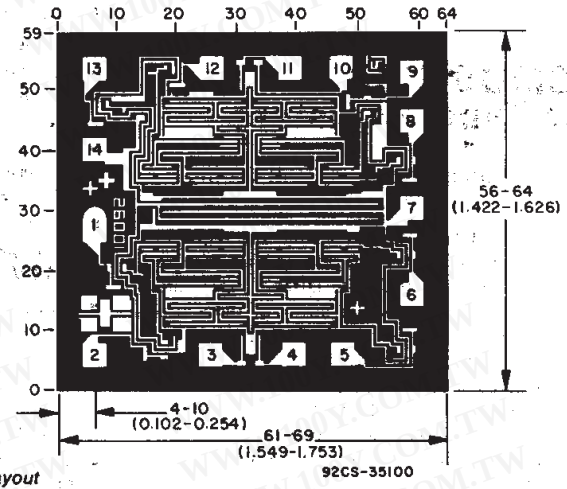


*Chip dimensions and pad layout for CD4081B.*

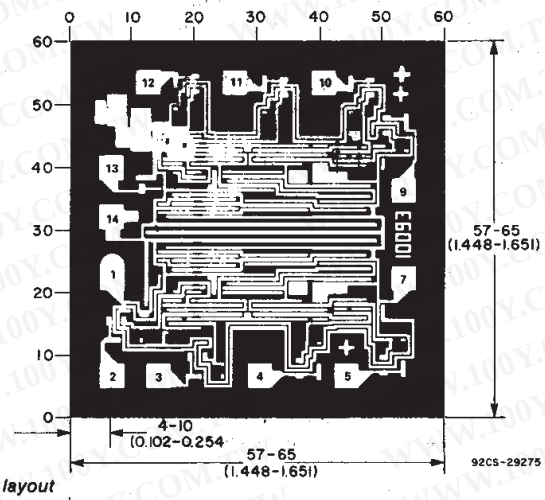


*Chip dimensions and pad layout for CD4082B.*

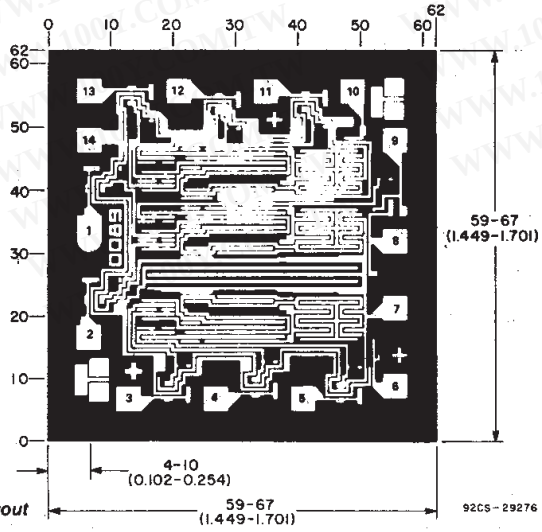


*Dimensions in parentheses are in millimeters and are derived from the basic inch dimensions as indicated. Grid graduations are in mils ($10^{-3}$ inch).*

*Chip dimensions and pad layout for CD4073B.*

勝 特 力 材 料 886-3-5753170
胜特力电子(上海) 86-21-54151736
胜特力电子(深圳) 86-755-83298787
Http://www.100y.com.tw

# J (R-GDIP-T**) CERAMIC DUAL IN-LINE PACKAGE

14 LEADS SHOWN

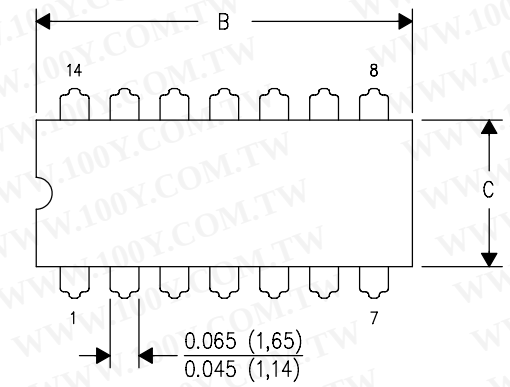


| DIM \ PINS ** | 14 | 16 | 18 | 20 |
|---|---|---|---|---|
| A | 0.300 (7,62) BSC | 0.300 (7,62) BSC | 0.300 (7,62) BSC | 0.300 (7,62) BSC |
| B MAX | 0.785 (19,94) | .840 (21,34) | 0.960 (24,38) | 1.060 (26,92) |
| B MIN | — | — | — | — |
| C MAX | 0.300 (7,62) | 0.300 (7,62) | 0.310 (7,87) | 0.300 (7,62) |
| C MIN | 0.245 (6,22) | 0.245 (6,22) | 0.220 (5,59) | 0.245 (6,22) |

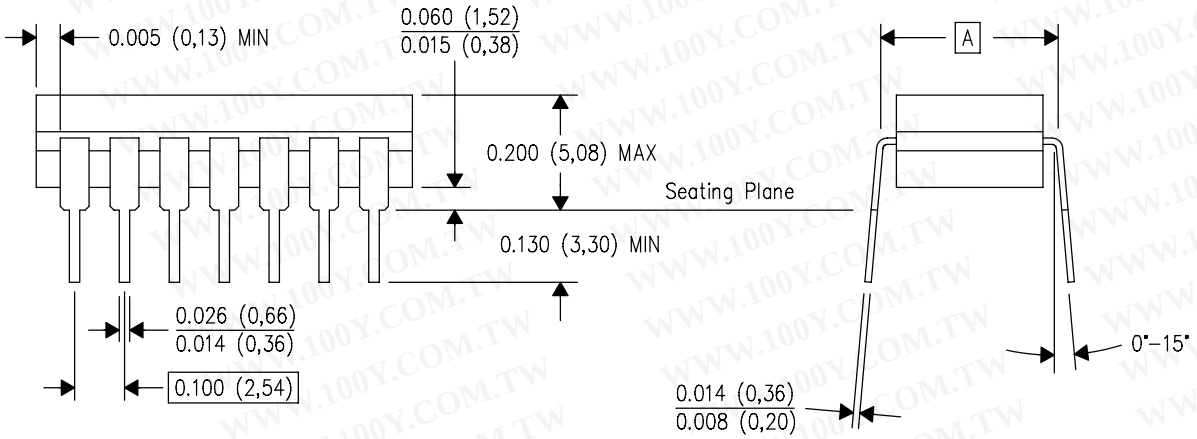


4040083/F 03/03

NOTES:
A. All linear dimensions are in inches (millimeters).
B. This drawing is subject to change without notice.
C. This package is hermetically sealed with a ceramic lid using glass frit.
D. Index point is provided on cap for terminal identification only on press ceramic glass frit seal only.
E. Falls within MIL STD 1835 GDIP1-T14, GDIP1-T16, GDIP1-T18 and GDIP1-T20.

勝 特 力 材 料 886-3-5753170
胜特力电子(上海) 86-21-54151736
胜特力电子(深圳) 86-755-83298787
Http://www.100y.com.tw



## N (R-PDIP-T**) PLASTIC DUAL-IN-LINE PACKAGE

**16 PINS SHOWN**

| DIM \ PINS ** | 14 | 16 | 18 | 20 |
|---|---|---|---|---|
| A MAX | 0.775 (19,69) | 0.775 (19,69) | 0.920 (23,37) | 1.060 (26,92) |
| A MIN | 0.745 (18,92) | 0.745 (18,92) | 0.850 (21,59) | 0.940 (23,88) |
| MS-100 VARIATION | AA | BB | AC | AD |

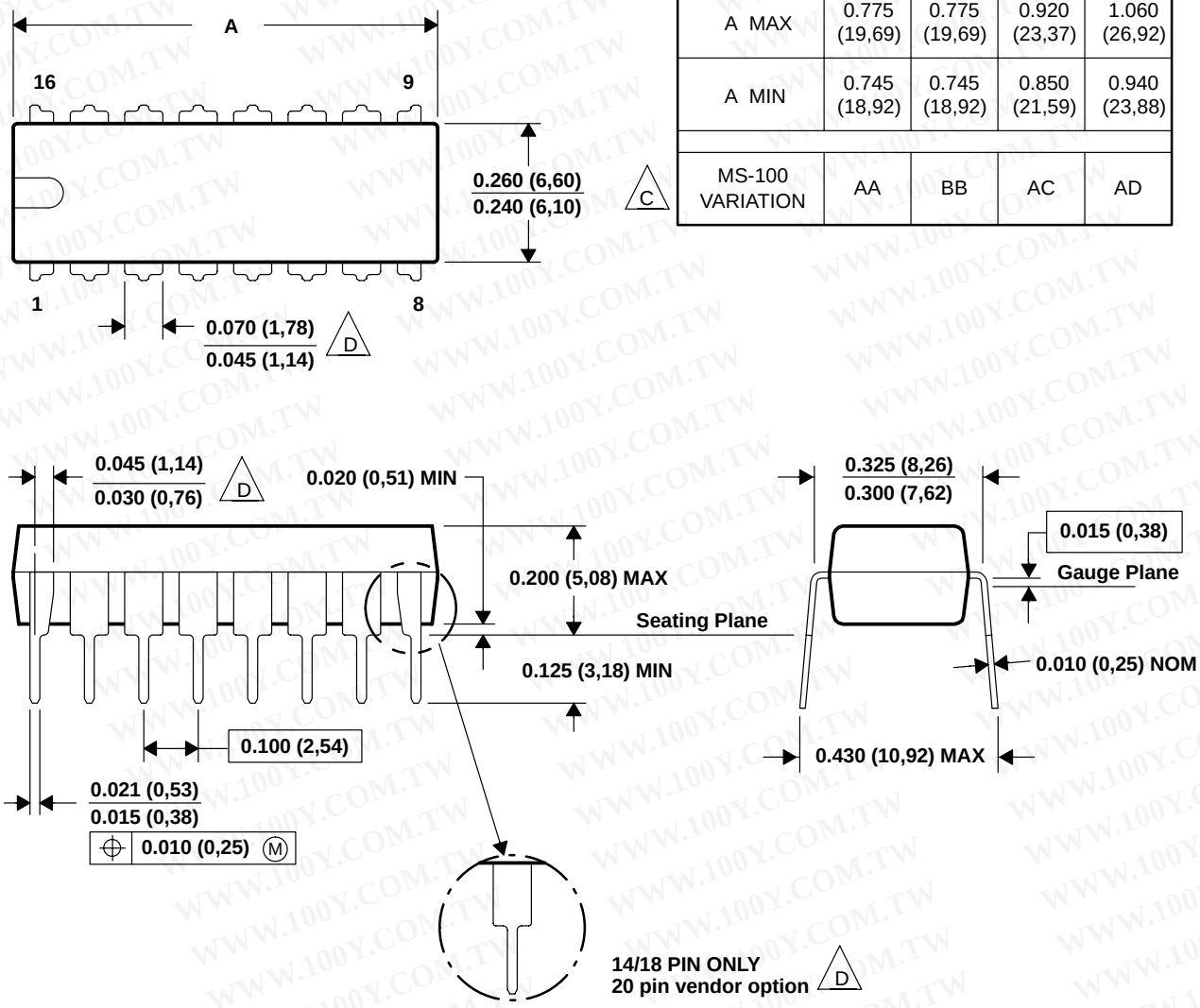


NOTES: A. All linear dimensions are in inches (millimeters).
B. This drawing is subject to change without notice.
C. Falls within JEDEC MS-001, except 18 and 20 pin minimum body lrngth (Dim A).
D. The 20 pin end lead shoulder width is a vendor option, either half or full width.

勝 特 力 材 料 886-3-5753170
胜特力电子(上海) 86-21-54151736
胜特力电子(深圳) 86-755-83298787
Http://www.100y.com.tw



## D (R-PDSO-G**)

## PLASTIC SMALL-OUTLINE PACKAGE

**8 PINS SHOWN**

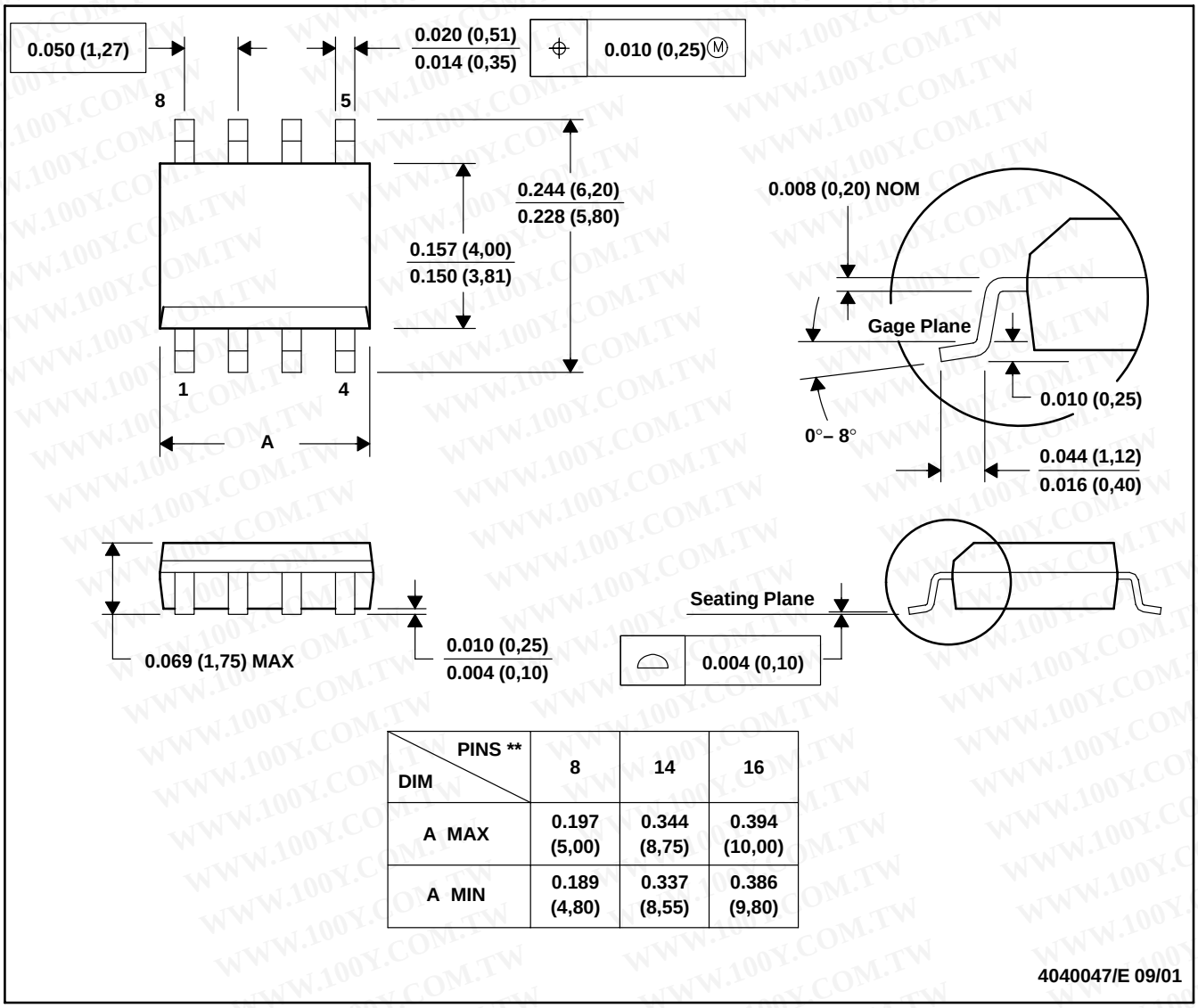


| DIM \ PINS ** | 8 | 14 | 16 |
|---|---|---|---|
| A MAX | 0.197 (5,00) | 0.344 (8,75) | 0.394 (10,00) |
| A MIN | 0.189 (4,80) | 0.337 (8,55) | 0.386 (9,80) |

NOTES:
A. All linear dimensions are in inches (millimeters).
B. This drawing is subject to change without notice.
C. Body dimensions do not include mold flash or protrusion, not to exceed 0.006 (0,15).
D. Falls within JEDEC MS-012

勝 特 力 材 料 886-3-5753170
胜特力电子(上海) 86-21-54151736
胜特力电子(深圳) 86-755-83298787
Http://www.100y.com.tw

# MECHANICAL DATA

**NS (R-PDSO-G**)** **PLASTIC SMALL-OUTLINE PACKAGE**

**14-PINS SHOWN**

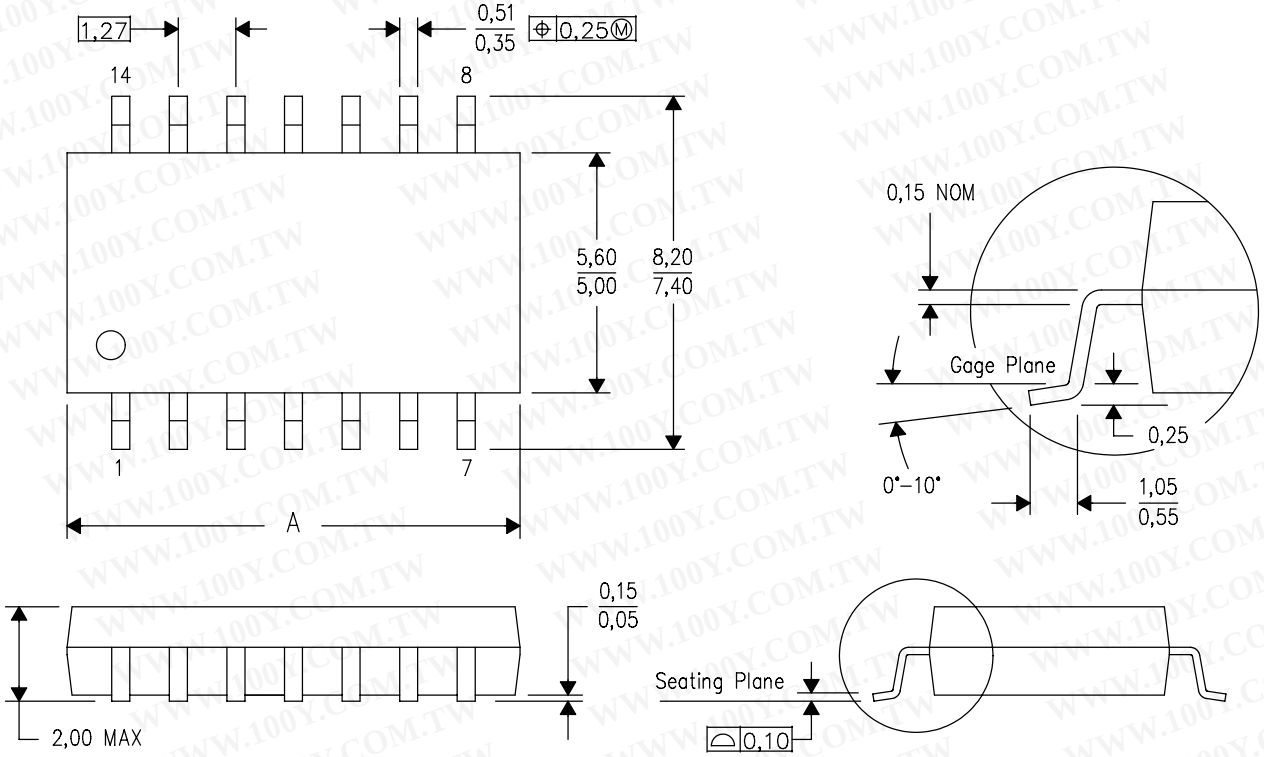


| DIM \ PINS ** | 14 | 16 | 20 | 24 |
|---|---|---|---|---|
| A MAX | 10,50 | 10,50 | 12,90 | 15,30 |
| A MIN | 9,90 | 9,90 | 12,30 | 14,70 |

4040062/C 03/03

NOTES:
A. All linear dimensions are in millimeters.
B. This drawing is subject to change without notice.
C. Body dimensions do not include mold flash or protrusion, not to exceed 0,15.

勝 特 力 材 料 886-3-5753170
胜特力电子(上海) 86-21-54151736
胜特力电子(深圳) 86-755-83298787
Http://www.100y.com.tw



**PW (R-PDSO-G**)** **PLASTIC SMALL-OUTLINE PACKAGE**

**14 PINS SHOWN**

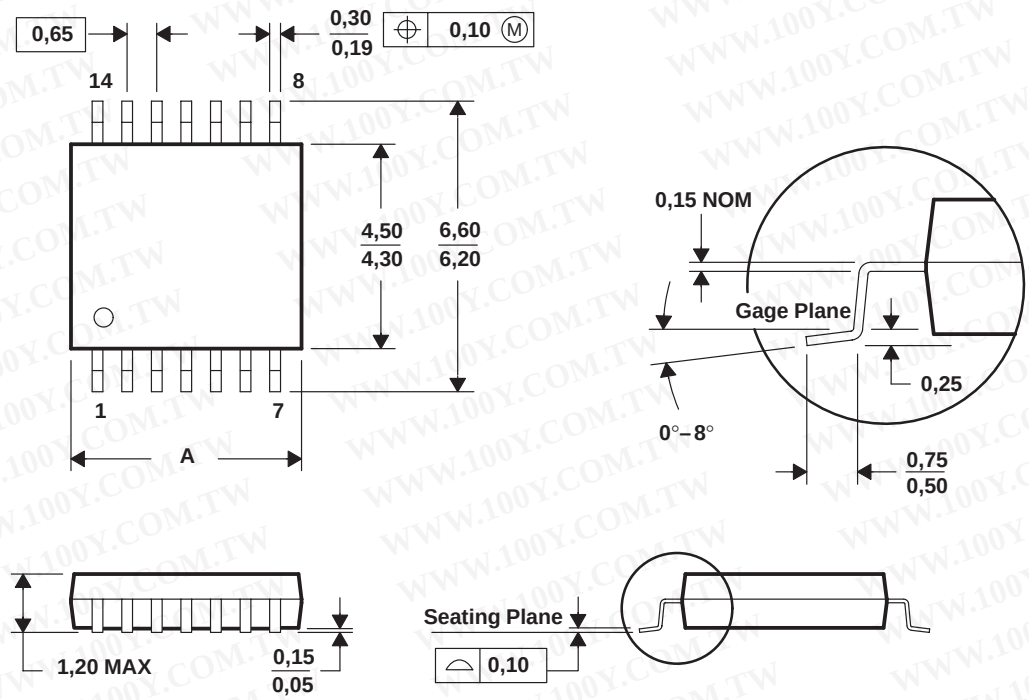


| DIM \ PINS ** | 8 | 14 | 16 | 20 | 24 | 28 |
|---|---|---|---|---|---|---|
| A MAX | 3,10 | 5,10 | 5,10 | 6,60 | 7,90 | 9,80 |
| A MIN | 2,90 | 4,90 | 4,90 | 6,40 | 7,70 | 9,60 |

**4040064/F 01/97**

NOTES: A. All linear dimensions are in millimeters.
B. This drawing is subject to change without notice.
C. Body dimensions do not include mold flash or protrusion not to exceed 0,15.
D. Falls within JEDEC MO-153