勝 特 力 材 料 886-3-5753170
胜特力电子(上海) 86-21-54151736
胜特力电子(深圳) 86-755-83298787
Http://www.100y.com.tw

FAIRCHILD SEMICONDUCTOR®

KA3303/KA3403

Quad Operational Amplifier

Features

- Output voltage can swing to GND or negative supply
- Wide power supply range;
- Single supply of 3.0V to 36V
- Dual supply of ±1.5V to ±18V
- Electrical characteristics similar to the KA741
- Class AB output stage for minimal crossover distortion
- Short circuit protected output.

Description

The KA3303 series is a monolithic Quad operational amplifier consisting of four independent amplifiers. The device has high gain, internally frequency, compensated operational amplifiers designed to operate from a single power supply or dual power supplies over a wide range of voltages. The common mode input range includes the negative supply, thereby eliminating the necessity for external biasing components in many applications.

14-DIP

1

14-SOP

1

Internal Block Diagram

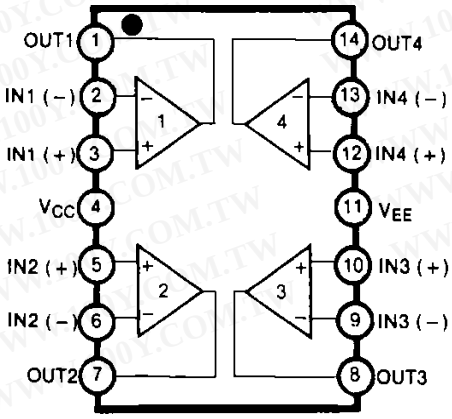

Rev. 1.0.1

©2001 Fairchild Semiconductor Corporation

勝 特 力 材 料 886-3-5753170
胜特力电子(上海) 86-21-54151736
胜特力电子(深圳) 86-755-83298787
Http://www.100y.com.tw

Schematic Diagram

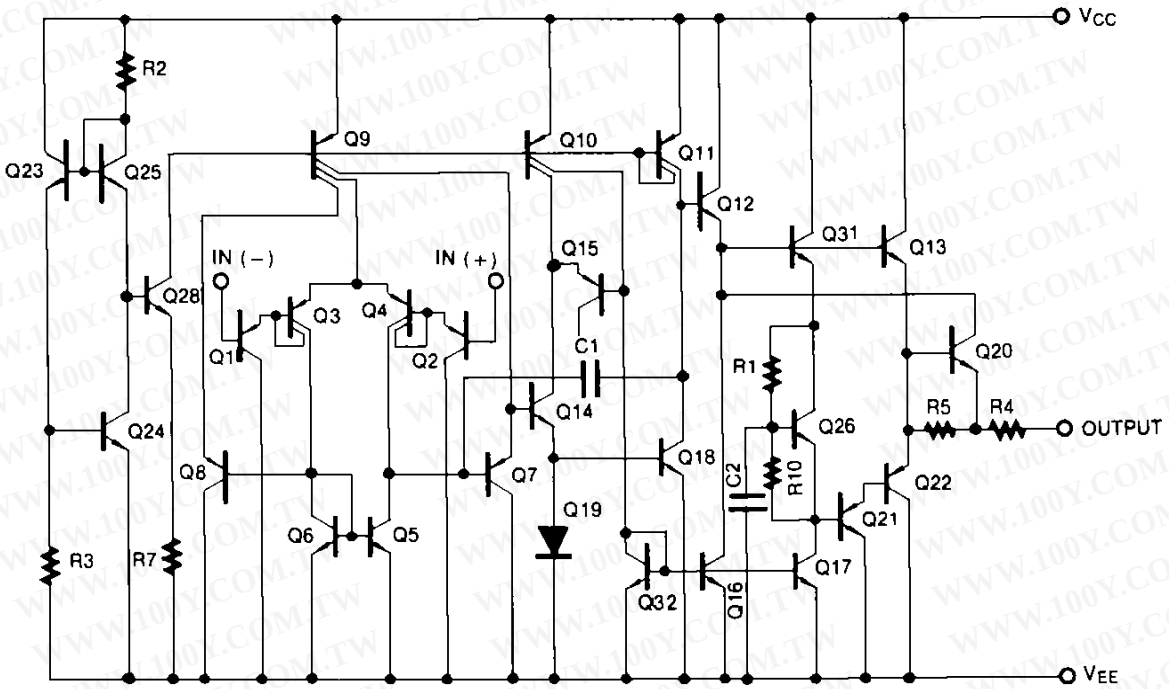

Absolute Maximum Ratings

Parameter	Symbol	Value	Unit
Supply Voltage	V_{CC}	±18 or +36	V
Differential Input Voltage	$V_{I(DIFF)}$	36	V
Input Voltage	V_I	±18	V
Output Short Circuit Duration	-	Continuous	-
Power Dissipation	P_D	670	mW
Operating Temperature KA3303 KA3403	T_{OPR}	 -40 ~ + 85 0 ~ + 70	 °C °C
Storage Temperature	T_{STG}	-65 ~ + 150	°C

勝 特 力 材 料 886-3-5753170
胜特力电子(上海) 86-21-54151736
胜特力电子(深圳) 86-755-83298787
Http://www.100y.com.tw

Electrical Characteristics

(V_{CC} = +15V, V_{EE} = -15V for KA3403, V_{CC} = +14V, V_{EE} = GND for KA3303, T_A = 25 °C, unless otherwise specified)

Parameter	Symbol	Conditions		KA3303			KA3403			Unit
				Min.	Typ.	Max.	Min.	Typ.	Max.	
Input Offset Voltage	V_{IO}	-		-	1.5	8.0	-	1.5	10	mV
			Note1	-	-	10	-	-	12	
Input Offset Current	I_{IO}	-		-	5	75	-	5	50	nA
			Note1	-	-	150	-	-	100	
Input Bias Current	I_{BIAS}	-		-	30	200	-	30	200	nA
			Note1	-	-	500	-	-	400	
Large Signal Voltage Gain	G_V	$V_{O(P-P)}$ = ±10V		20	200	-	20	200	-	V/mV
		R_L = 2KΩ	Note1	15	-	-	15	-	-	
Input Impedance	R_I	-		0.3	1.0	-	0.3	1.0	-	MΩ
Output Voltage Swing	$V_{O(P-P)}$	R_L = 10KΩ		+12	+12.5	-	±12	±13.5	-	V
		R_L = 2KΩ		+10	+12	-	±10	±13	-	
		R_L = 2KΩ	Note1	+10	-	-	±10	-	-	
Input Common Mode Voltage Range	$V_{I(R)}$	-		12V -V_{EE}	12.5V -V_{EE}	-	13V -V_{EE}	13.5V -V_{EE}	-	V
Common Mode Rejection Ratio	CMRR	R_S ≥ 10KΩ		70	90	-	70	90	-	dB
Power Supply Current	I_{CC}	$V_{O(P)}$ = 0, R_L = ∞		-	2.8	7.0	-	2.3	7.0	mA
Output Short Circuit Current	I_{SC}	Each amplifier		±10	±30	±45	±10	±20	±45	mA
Positive Supply Rejection Ratio	PSRR(+)	-		-	30	150	-	30	150	µV/V
Negative Supply Rejection Ratio	PSRR(-)	-		-	-	-	-	30	150	µV/V

勝 特 力 材 料 886-3-5753170
胜特力电子(上海) 86-21-54151736
胜特力电子(深圳) 86-755-83298787
Http://www.100y.com.tw

Electrical Characteristics (Continued)

(V_{CC} = +15V, V_{EE} = -15V for KA3403, V_{CC} = +14V, V_{EE} = GND for KA3303, T_A = 25 °C, unless otherwise specified)

Parameter	Symbol	Conditions	KA3303			KA3403			Unit
			Min.	Typ.	Max.	Min.	Typ.	Max.	
Average Temperature Coefficient of Input Offset Current (Note2)	$\Delta I_{IO}/\Delta T$	-	-	50	-	-	50	-	pA/ °C
Input Offset Voltage Drift (Note2)	$\Delta V_{IO}/\Delta T$	-	-	10	-	-	10	-	µV/ °C
Power Bandwidth (Note2)	GBW	G_V = 1,R_L = 2KΩ, $V_{O(P.P)}$ = 20V_{P-P}, THD=5%	-	9.0	-	-	9.0	-	KHz
Small Signal Bandwidth (Note2)	BW	G_V=1,R_L=10KΩ $V_{O(P-P)}$=50mV	-	1.0	-	-	1.0	-	MHz
Slew Rate (Note2)	SR	G_V=1,V_I= -10V to +10V	-	0.4	-	-	0.4	-	V/µs
Rise Time (Note2)	T_R	G_V=1,R_L=10KΩ $V_{O(P-P)}$=50mV	-	0.35	-	-	0.35	-	µs
Fall Time (Note2)	T_F	G_V=1,R_L=10KΩ $V_{O(P-P)}$=50mV	-	0.35	-	-	0.35	-	µs
Over Shoot (Note2)	OS	G_V=1,R_L=10KΩ $V_{O(P-P)}$=50mV	-	20	-	-	20	-	%
Phase Margin (Note2)	MPH	G_V=1,R_L=2KΩ, C_L =200pF	-	60	-	-	60	-	Degree
Crossover Distortion (Note2)	CD	V_I =30mV_{P-P}, $V_{O(P-P)}$=2.0V_{P-P} f =10KHz	-	1.0	-	-	1.0	-	%

Note:
1. KA3403: 0 °C ≤ T_A ≤ +70 °C , KA3303: -40 °C ≤ T_A ≤ +85 °C
2. Guaranteed by design.

勝 特 力 材 料 886-3-5753170
胜特力电子(上海) 86-21-54151736
胜特力电子(深圳) 86-755-83298787
Http://www.100y.com.tw

Electrical Characteristics

(V_{CC} = 5.0V, V_{EE} = GND, T_A=25 °C unless otherwise specified)

Parameter	Symbol	Conditions	KA3303			KA3403			Unit
			Min.	Typ.	Max.	Min.	Typ.	Max.	
Input Offset Voltage	V_{IO}	-	-	-	10	-	2.0	10	mV
Input Offset Current	I_{IO}	-	-	-	75	-	30	50	nA
Input Bias Current	I_{BIAS}	-	-	-	500	-	200	500	nA
Large Signal Open Loop Voltage Gain	G_V	R_L = 2.0KΩ	10	200	-	10	200	-	V/mV
Power Supply Rejection Ratio	PSRR	-	-	-	150	-	-	150	µV/V
Output Voltage Range	$V_{O(P-P)}$	R_L = 10KΩ, V_{CC} = 5.0V	3.3	3.5	-	3.3	3.5	-	V
		R_L =10KΩ, 5.0V ≤ V_{CC} ≤ 30V	V_{CC} -2.0	V_{CC} -1.7	-	V_{CC} -2.0	V_{CC} -1.7	-	
Supply Current	I_{CC}	-	-	2.5	7.0	-	2.5	7.0	mA
Channel Separation	CS	f = 1KHz to 20KHz	-	120	-	-	120	-	dB

Typical Performance Characteristics

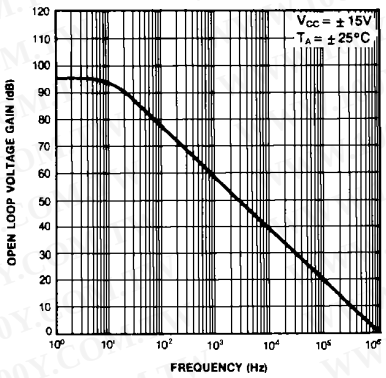

Figure 1. Open Loop Frequency Response

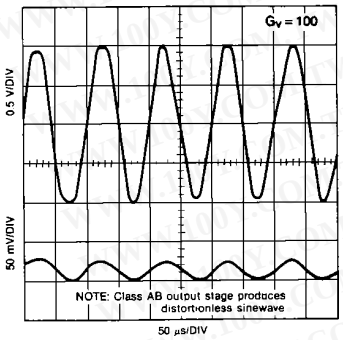

Figure 2. Wave Response

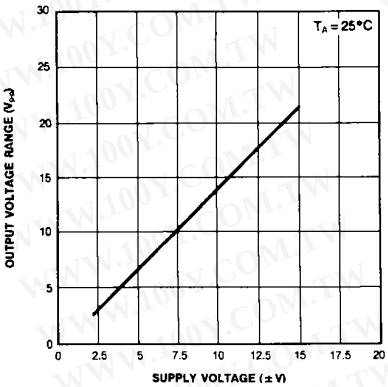

Figure 3. Output Swing

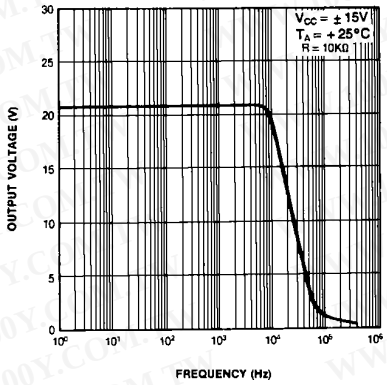

Figure 4. Output Voltage vs Frequency

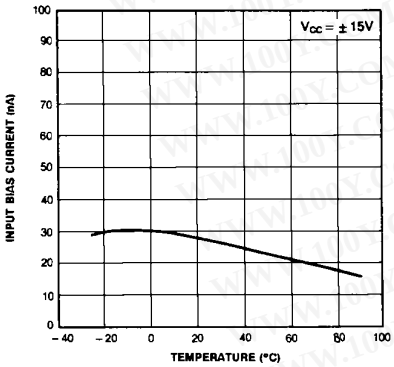

Figure 5. Input Bias Current vs Temperature

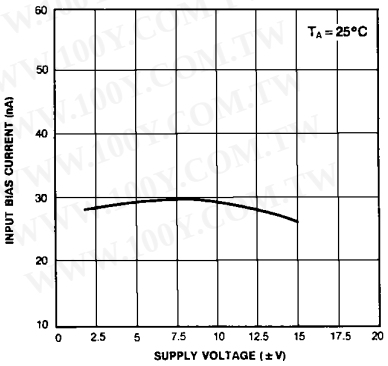

Figure 6. Input Bias Current vs Supply Voltage

勝 特 力 材 料 886-3-5753170
胜特力电子(上海) 86-21-54151736
胜特力电子(深圳) 86-755-83298787
Http://www.100y.com.tw

Mechanical Dimensions

Package

Dimensions in millimeters

14-DIP

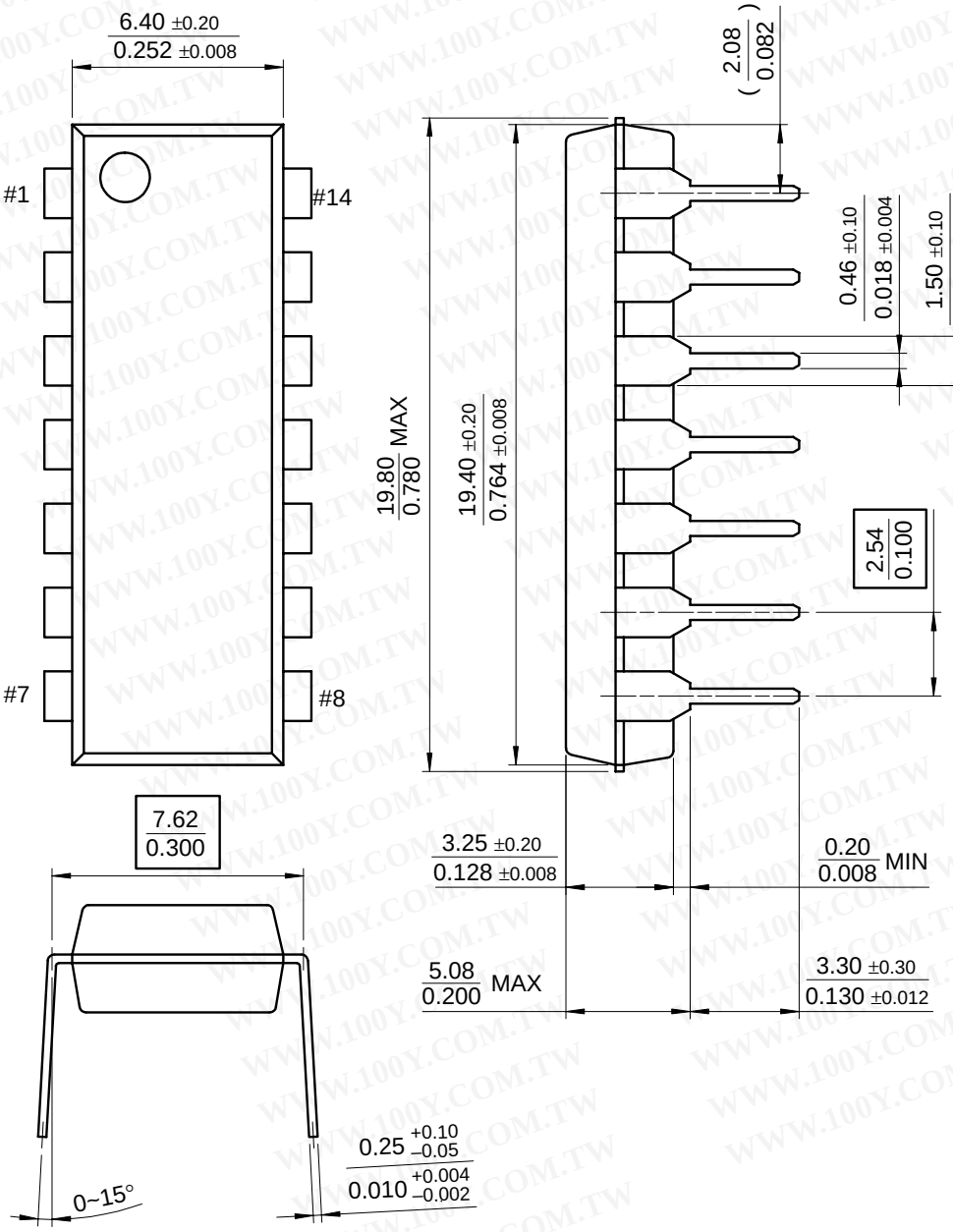

勝 特 力 材 料 886-3-5753170
胜特力电子(上海) 86-21-54151736
胜特力电子(深圳) 86-755-83298787
Http://www.100y.com.tw

Mechanical Dimensions (Continued)

Package

Dimensions in millimeters

14-SOP

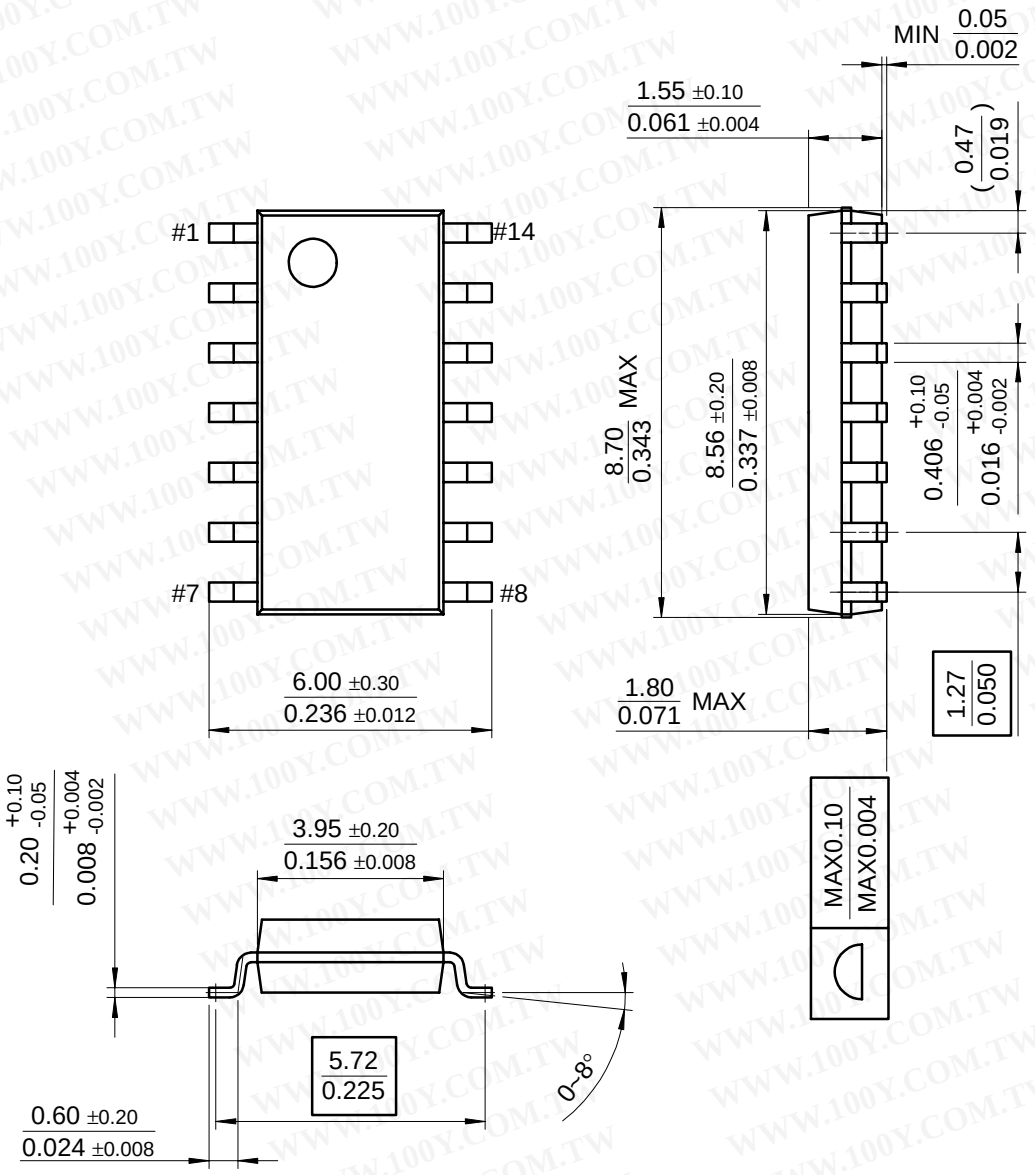

勝 特 力 材 料 886-3-5753170
胜特力电子(上海) 86-21-54151736
胜特力电子(深圳) 86-755-83298787
Http://www.100y.com.tw

Ordering Information

Product Number	Package	Operating Temperature
KA3403	14-DIP	0 ~ + 70°C
KA3403D	14-SOP	
KA3303	14-DIP	-40 ~ + 85°C
KA3303D	14-SOP	