勝 特 力 材 料 886-3-5753170
胜特力电子(上海) 86-21-54151736
胜特力电子(深圳) 86-755-83298787
Http://www.100y.com.tw

T-1 3/4 (5.0)

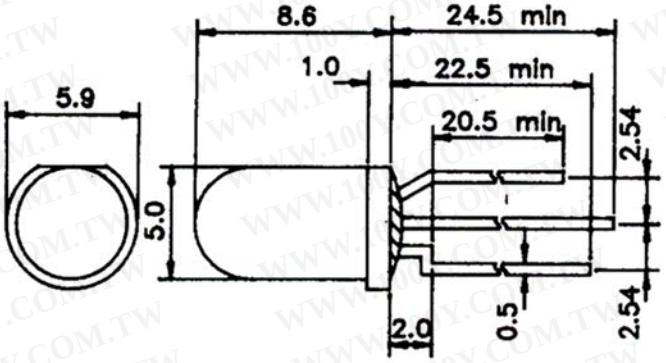

EMITTING		COMMON ANODE	BI-COLOR	COMMON CATHODE	BI-COLOR	WAVE LENGTH	IR MAX	VF(V) TYP	INTENSITY (mcd)
DICE	COLOR	WATER CLEAR	MILKY	WATER CLEAR	MILKY	@IF=20mA	@VR=5V	@IF=20mA	@IF=10mA
Gap	GREEN	L506DC	L506DM	L505DC	L505DM	565 nm	100uA	2.2V	14-30
Gap	YELLOW					600 nm	100uA	2.1V	10-24
GaAsp/Gap	ORANGE	L506CC	L506CM	L505CC	* L505CM	635 nm	100uA	2.0V	15-32
Gap	GREEN					565 nm	100uA	2.2V	14-30
Gap	GREEN	L506BC	L506BM	L505BC	L505BM	565 nm	100uA	2.2V	14-30
Gap	RED					695 nm	100uA	2.2V	3.5-7.5