LM337

3-Terminal 1.5A Negative Adjustable Regulator

Features

- Output current in excess of 1.5A
- Output voltage adjustable between -1.2V and - 37V
- Internal thermal overload protection
- Internal short circuit current limiting
- Output transistor safe area compensation
- Floating operation for high voltage applications
- Standard 3-pin TO-220 package

Description

The LM337 is a 3-terminal negative adjustable regulator. It supplies in excess of 1.5A over an output voltage range of -1.2V to - 37V. This regulator requires only two external resistor to set the output voltage. Included on the chip are current limiting, thermal overload protection and safe area compensation.

TO-220

1. Adj 2. Input 3. Output

Internal Block Diagram

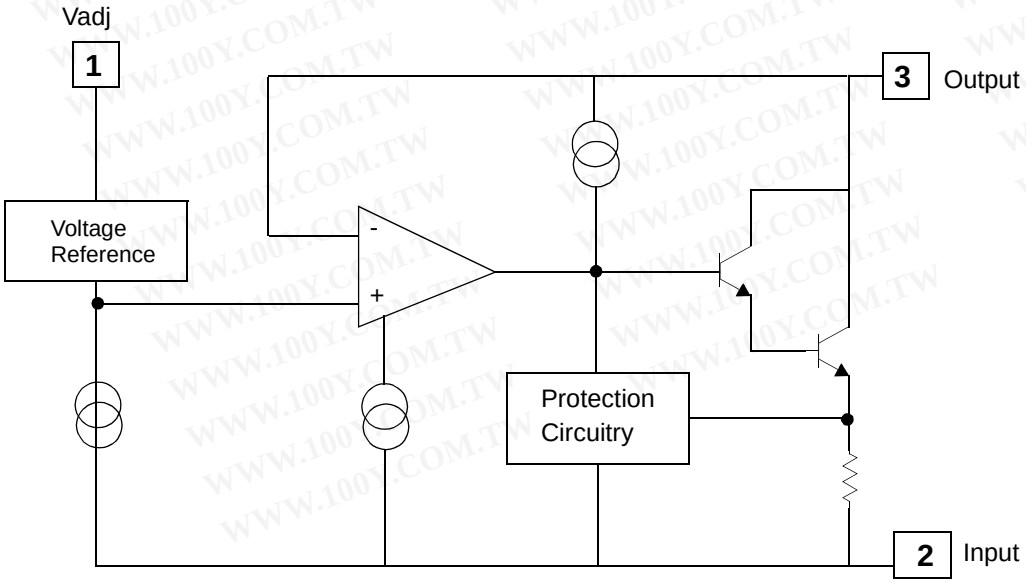

Rev. 1.0.0

Absolute Maximum Ratings

Parameter	Symbol	Value	Unit
Input-Output Voltage Differential	$\|V_I - V_O\|$	40	V
Power Dissipation	P_D	Internally limited	W
Operating Temperature Range	T_{OPR}	0 ~ +125	°C
Storage Temperature Range	T_{STG}	-65 ~+125	°C

Electrical Characteristics

($V_I - V_O$ = 5V, I_O = 40mA, 0°C ≤ T_J ≤ +125°C, P_{DMAX} = 20W, unless otherwise specified)

Parameter	Symbol	Conditions	Min	Typ.	Max.	Unit
Line Regulation (Note1)	R_{line}	T_A = +25°C 3V ≤ I $V_I - V_O$ I ≤ 40V	-	0.01	0.04	%/ V
		3V ≤ I $V_I - V_O$ I ≤ 40V	-	0.02	0.07	
Load Regulation (Note1)	R_{load}	T_A = +25°C 10mA ≤ I_O ≤ 0.5A	-	15	50	mV
		10mA ≤ I_O ≤ 1.5A	-	15	150	
Adjustable Pin Current	I_{ADJ}	-	-	50	100	µA
Adjustable Pin Current Change	ΔI_{ADJ}	T_A =+ 25°C 10mA ≤ I_O ≤ 1.5A 3V ≤I $V_I - V_O$ I ≤ 40V	-	2	5	µA
Reference Voltage	V_{REF}	T_A =+ 25°C	-1.213	-1.250	-1.287	V
		3V ≤ I $V_I - V_O$ I ≤ 40V 10mA ≤ I_O ≤ 1.5A	-1.200	-1.250	-1.300	
Temperature Stability	ST_T	0°C ≤ TJ ≤ +125°C	-	0.6	-	%
Minimum Load Current to Maintain Regulation	$I_{L(MIN)}$	3V ≤I $V_I - V_O$ I ≤ 40V	-	2.5	10	mA
		3V ≤I $V_I - V_O$ I ≤ 10V	-	1.5	6	
Output Noise	e_N	T_A =+25°C 10Hz ≤ f ≤10KHz	-	0.003	-	$V/10^6$
Ripple Rejection Ratio	RR	V_O = -10V, f = 120Hz	-	60	-	dB
		C_{ADJ} = 10µF (Note2)	66	77	-	
Long Term Stability	ST	T_J = 125°C ,1000Hours	-	0.3	1	%
Thermal Resistance Junction to Case	$R_{\theta JC}$	-	-	4	-	°C/ W

Note:

1. Load and line regulation are specified at constant junction temperature. Change in V_O due to heating effects must be taken into account separately. Pulse testing with low duty is used.
2. C_{ADJ}, when used, is connected detween the adjustment pin and ground.

Typical Application

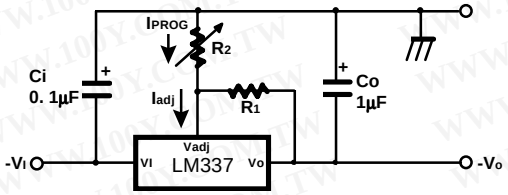

Figure 1. Programmable Regulator

- Ci is required if regulator is located more then 4 inches from power supply filter.
  A 1.0µF solid tantalum or 10µF aluminum electrolytic is recommended.
  Co is necessary for stability. A 1.0µF solid tantalum or 10µF aluminum electrolytic is recommended.
- $V_O = -1.25V\ (1+R_2/R_1)$

Mechanical Dimensions

Package

TO-220

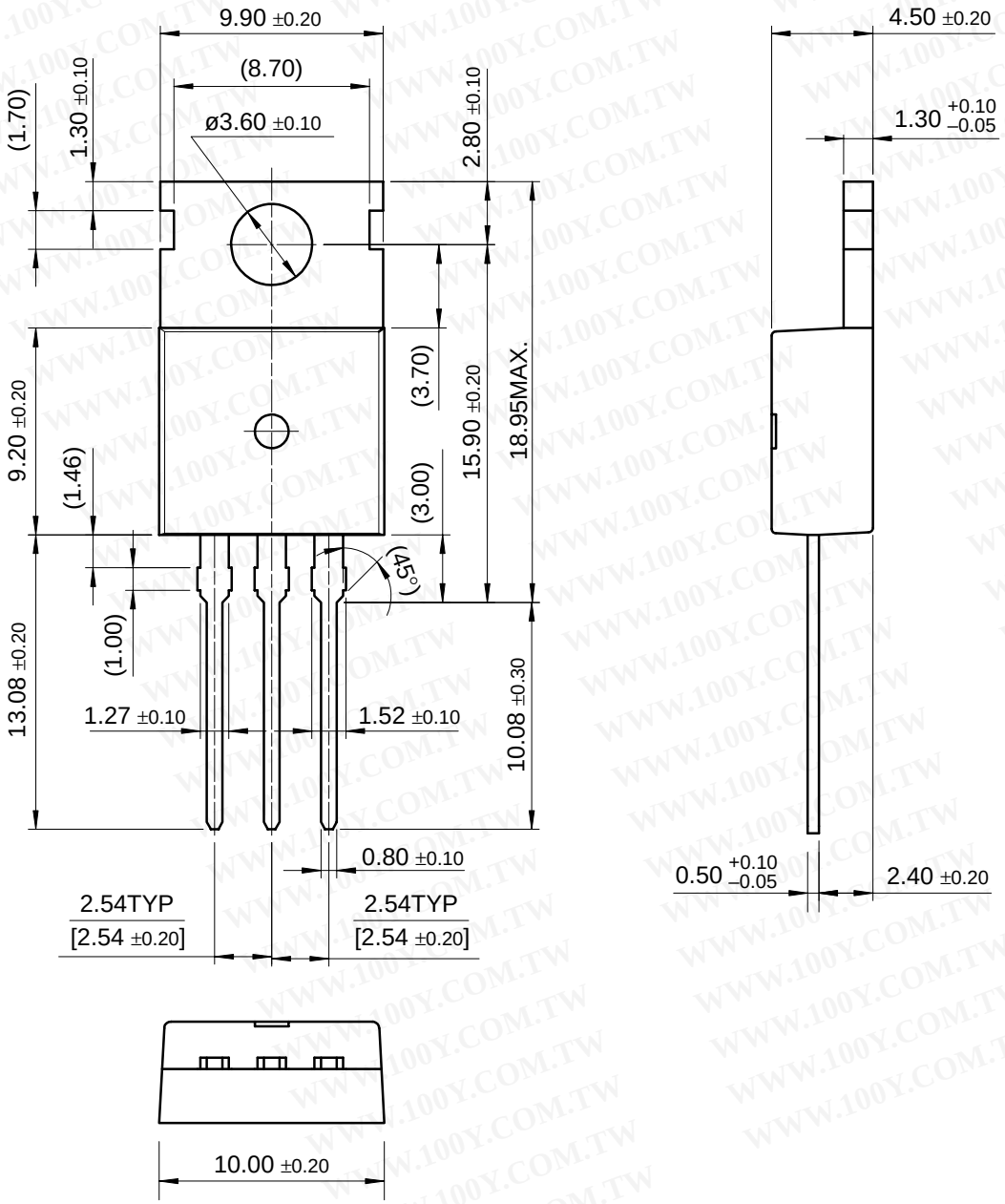

Ordering Information

Product Number	Package	Operating Temperature
LM337T	TO-220	0°C to + 125°C