LM158, LM158A, LM258, LM258A
LM358, LM358A, LM2904, LM2904V
DUAL OPERATIONAL AMPLIFIERS

SLOS068K − JUNE 1976 − REVISED APRIL 2004

- **Single/Dual Supply Voltages:**
  - **LM2904 . . . 3 V to 26 V**
  - **LM2904V . . . 3 V to 32 V**
  - **All Others . . . 3 V to 30 V**
- **Low Supply-Current Drain, Independent of Supply Voltage . . . 0.7 mA Typ**
- **Common-Mode Input Voltage Range Includes Ground, Allowing Direct Sensing Near Ground**
- **Low Input Bias and Offset Parameters:**
  - **Input Offset Voltage . . . 3 mV Typ**
    A Versions . . . 2 mV Typ
  - **Input Offset Current . . . 2 nA Typ**
  - **Input Bias Current . . . 20 nA Typ**
    A Versions . . . 15 nA Typ
- **Differential Input Voltage Range Equal to Maximum-Rated Supply Voltage . . . ±32 V (LM2904 . . . ±26 V) (LM2904V . . . ±32 V)**
- **Open-Loop Differential Voltage Amplification . . . 100 V/mV Typ**
- **Internal Frequency Compensation**

LM158, LM158A . . . JG PACKAGE
LM258, LM258A . . . D OR P PACKAGE
LM358 . . . D, DGK, P, PS, OR PW PACKAGE
LM358A . . . D, DGK, P, OR PW PACKAGE
LM2904 . . . D, DGK, P, PS, OR PW PACKAGE
(TOP VIEW)

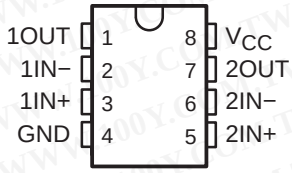

LM158, LM158A . . . FK PACKAGE
(TOP VIEW)

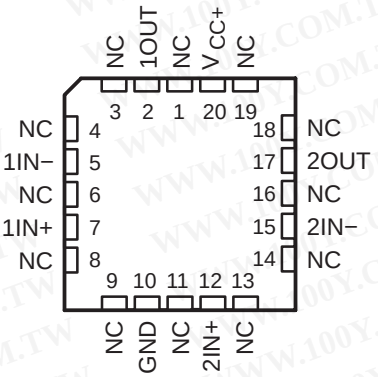

NC − No internal connection

description/ordering information

These devices consist of two independent, high-gain, frequency-compensated operational amplifiers designed to operate from a single supply over a wide range of voltages. Operation from split supplies also is possible if the difference between the two supplies is 3 V to 30 V (3 V to 26 V for the LM2904 and 3 V to 32 V for the LM2904V), and V_{CC} is at least 1.5 V more positive than the input common-mode voltage. The low supply-current drain is independent of the magnitude of the supply voltage.

Applications include transducer amplifiers, dc amplification blocks, and all the conventional operational amplifier circuits that now can be implemented more easily in single-supply-voltage systems. For example, these devices can be operated directly from the standard 5-V supply used in digital systems and easily can provide the required interface electronics without additional ±5-V supplies.

description/ordering information (continued)

ORDERING INFORMATION

T_A	V_{IO}max AT 25°C	MAX V_{CC}	PACKAGE†		ORDERABLE PART NUMBER	TOP-SIDE MARKING
0°C to 70°C	7 mV	30 V	PDIP (P)	Tube of 50	LM358P	LM358P
			SOIC (D)	Tube of 75	LM358D	LM358
				Reel of 2500	LM358DR	
			SOP (PS)	Reel of 2000	LM358PSR	L358
			TSSOP (PW)	Tube of 150	LM358PW	L358
				Reel of 2000	LM358PWR	
			VSSOP (DGK)	Reel of 2500	LM358DGKR	M5S
	3 mV	30 V	PDIP (P)	Tube of 50	LM358AP	LM358AP
			SOIC (D)	Tube of 75	LM358AD	LM358A
				Reel of 2500	LM358ADR	
			TSSOP (PW)	Tube of 150	LM358APW	L358A
				Reel of 2000	LM358APWR	
			VSSOP (DGK)	Reel of 2500	LM358ADGKR	M6S
−25°C to 85°C	5 mV	30 V	PDIP (P)	Tube of 50	LM258P	LM258P
			SOIC (D)	Tube of 75	LM258D	LM258
				Reel of 2500	LM258DR	
	3 mV	30 V	PDIP (P)	Tube of 50	LM258AP	LM258AP
			SOIC (D)	Tube of 75	LM258AD	LM258A
				Reel of 2500	LM258ADR	
−40°C to 125°C	7 mV	26 V	PDIP (P)	Tube of 50	LM2904P	LM2904P
			SOIC (D)	Tube of 75	LM2904D	LM2904
				Reel of 2500	LM2904DR	
			SOP (PS)	Reel of 2000	LM2904PSR	L2904
			TSSOP (PW)	Tube of 150	LM2904PW	L2904
				Reel of 2000	LM2904PWR	
			VSSOP (DGK)	Reel of 2500	LM2904DGKR	MBS
	7 mV	32 V	SOIC (D)	Reel of 2500	LM2904VQDR	L2904V
			TSSOP (PW)	Reel of 2000	LM2904VQPWR	L2904V
	2 mV	32 V	SOIC (D)	Reel of 2500	LM2904AVQDR	L2904AV
			TSSOP (PW)	Reel of 2000	LM2904AVQPWR	L2904AV
−55°C to 125°C	5 mV	30 V	CDIP (JG)	Tube of 50	LM158JG	LM158JG
			LCCC (FK)	Tube of 55	LM158FK	LM158FK
	2 mV	30 V	CDIP (JG)	Tube of 50	LM158AJG	LM158AJG
			LCCC (FK)	Tube of 55	LM158AFK	LM158AFK

† Package drawings, standard packing quantities, thermal data, symbolization, and PCB design guidelines are available at www.ti.com/sc/package.

symbol (each amplifier)

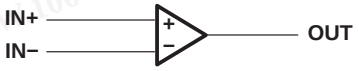

schematic (each amplifier)

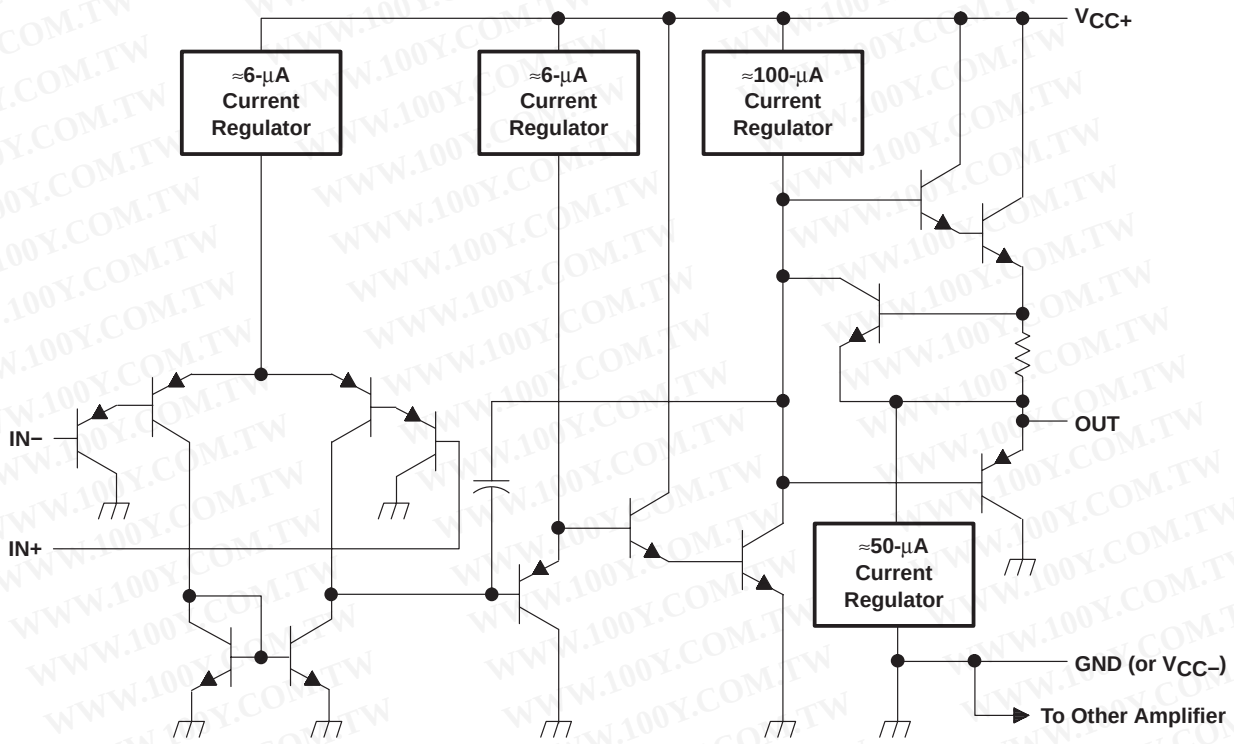

COMPONENT COUNT	
Epi-FET	1
Diodes	2
Resistors	7
Transistors	51
Capacitors	2

absolute maximum ratings over operating free-air temperature range (unless otherwise noted)†

		LM158, LM158A LM258, LM258A LM358, LM358A LM2904V	LM2904	UNIT
Supply voltage, V_{CC} (see Note 1)		±16 or 32	±13 or 26	V
Differential input voltage, V_{ID} (see Note 2)		±32	±26	V
Input voltage, V_I (either input)		−0.3 to 32	−0.3 to 26	V
Duration of output short circuit (one amplifier) to ground at (or below) 25°C free-air temperature (V_{CC} ≤ 15 V) (see Note 3)		Unlimited	Unlimited	
Package thermal impedance, θ_{JA} (see Notes 4 and 5)	D package	97	97	°C/W
	DGK package	172	172	
	P package	85	85	
	PS package	95	95	
	PW package	149	149	
Package thermal impedance, θ_{JC} (see Notes 6 and 7)	FK package	5.61		°C/W
	JG package	14.5		
Operating free-air temperature range, T_A	LM158, LM158A	−55 to 125		°C
	LM258, LM258A	−25 to 85		
	LM358, LM358A	0 to 70		
	LM2904	−40 to 125	−40 to 125	
Operating virtual junction temperature, T_J		150	150	°C
Case temperature for 60 seconds	FK package	260		°C
Lead temperature 1,6 mm (1/16 inch) from case for 60 seconds	JG package	300	300	°C
Storage temperature range, T_{stg}		−65 to 150	−65 to 150	°C

† Stresses beyond those listed under “absolute maximum ratings” may cause permanent damage to the device. These are stress ratings only, and functional operation of the device at these or any other conditions beyond those indicated under “recommended operating conditions” is not implied. Exposure to absolute-maximum-rated conditions for extended periods may affect device reliability.

NOTES:
1. All voltage values, except differential voltages and V_{CC} specified for measurement of I_{OS}, are with respect to the network ground terminal.
2. Differential voltages are at IN+ with respect to IN−.
3. Short circuits from outputs to V_{CC} can cause excessive heating and eventual destruction.
4. Maximum power dissipation is a function of $T_J(max)$, θ_{JA}, and T_A. The maximum allowable power dissipation at any allowable ambient temperature is $P_D = (T_J(max) - T_A)/\theta_{JA}$. Operating at the absolute maximum T_J of 150°C can affect reliability.
5. The package thermal impedance is calculated in accordance with JESD 51-7.
6. Maximum power dissipation is a function of $T_J(max)$, θ_{JC}, and T_C. The maximum allowable power dissipation at any allowable case temperature is $P_D = (T_J(max) - T_C)/\theta_{JC}$. Operating at the absolute maximum T_J of 150°C can affect reliability.
7. The package thermal impedance is calculated in accordance with MIL-STD-883.

electrical characteristics at specified free-air temperature, V_{CC} = 5 V (unless otherwise noted)

PARAMETER		TEST CONDITIONS†		T_A‡	LM158 LM258 MIN	LM158 LM258 TYP§	LM158 LM258 MAX	LM358 MIN	LM358 TYP§	LM358 MAX	UNIT
V_{IO}	Input offset voltage	V_{CC} = 5 V to MAX, $V_{IC} = V_{ICR(min)}$, V_O = 1.4 V		25°C		3	5		3	7	mV
				Full range			7			9	
$\alpha_{V_{IO}}$	Average temperature coefficient of input offset voltage			Full range		7			7		µV/°C
I_{IO}	Input offset current	V_O = 1.4 V		25°C		2	30		2	50	nA
				Full range			100			150	
$\alpha_{I_{IO}}$	Average temperature coefficient of input offset current			Full range		10			10		pA/°C
I_{IB}	Input bias current	V_O = 1.4 V		25°C		−20	−150		−20	−250	nA
				Full range			−300			−500	
V_{ICR}	Common-mode input voltage range	V_{CC} = 5 V to MAX		25°C	0 to V_{CC}−1.5			0 to V_{CC}−1.5			V
				Full range	0 to V_{CC}−2			0 to V_{CC}−2			
V_{OH}	High-level output voltage	$R_L \geq 2$ kΩ		25°C	V_{CC}−1.5			V_{CC}−1.5			V
		$R_L \geq 10$ kΩ		25°C							
		V_{CC} = MAX	R_L = 2 kΩ	Full range	26			26			
			$R_L \geq 10$ kΩ	Full range	27	28		27	28		
V_{OL}	Low-level output voltage	$R_L \leq 10$ kΩ		Full range		5	20		5	20	mV
A_{VD}	Large-signal differential voltage amplification	V_{CC} = 15 V, V_O = 1 V to 11 V, R_L = ≥ 2 kΩ		25°C	50	100		25	100		V/mV
				Full range	25			15			
CMRR	Common-mode rejection ratio	V_{CC} = 5 V to MAX, $V_{IC} = V_{ICR(min)}$		25°C	70	80		65	80		dB
k_{SVR}	Supply-voltage rejection ratio ($\Delta V_{DD}/\Delta V_{IO}$)	V_{CC} = 5 V to MAX		25°C	65	100		65	100		dB
V_{O1}/V_{O2}	Crosstalk attenuation	f = 1 kHz to 20 kHz		25°C		120			120		dB
I_O	Output current	V_{CC} = 15 V, V_{ID} = 1 V, V_O = 0		25°C	−20	−30		−20	−30		mA
				Full range	−10			−10			
		V_{CC} = 15 V, V_{ID} = −1 V, V_O = 15 V		25°C	10	20		10	20		
				Full range	5			5			
		V_{ID} = −1 V,	V_O = 200 mV	25°C	12	30		12	30		µA
I_{OS}	Short-circuit output current	V_{CC} at 5 V, GND at −5 V, V_O = 0		25°C		±40	±60		±40	±60	mA
I_{CC}	Supply current (two amplifiers)	V_O = 2.5 V,	No load	Full range		0.7	1.2		0.7	1.2	mA
		V_{CC} = MAX, V_O = 0.5 V, No load		Full range		1	2		1	2	

† All characteristics are measured under open-loop conditions, with zero common-mode input voltage, unless otherwise specified. MAX V_{CC} for testing purposes is 26 V for the LM2904 and 30 V for others.
‡ Full range is −55°C to 125°C for LM158, −25°C to 85°C for LM258, 0°C to 70°C for LM358, and −40°C to 125°C for LM2904.
§ All typical values are at T_A = 25°C.

electrical characteristics at specified free-air temperature, V_{CC} = 5 V (unless otherwise noted)

PARAMETER		TEST CONDITIONS†		T_A‡	LM2904 MIN	LM2904 TYP§	LM2904 MAX	UNIT
V_{IO}	Input offset voltage	V_{CC} = 5 V to MAX, $V_{IC} = V_{ICR(min)}$, V_O = 1.4 V		25°C		3	7	mV
				Full range			10	
$\alpha_{V_{IO}}$	Average temperature coefficient of input offset voltage			Full range		7		µV/°C
I_{IO}	Input offset current	V_O = 1.4 V	Non-V device	25°C		2	50	nA
				Full range			300	
			V-suffix device	25°C		2	50	
				Full range			150	
$\alpha_{I_{IO}}$	Average temperature coefficient of input offset current			Full range		10		pA/°C
I_{IB}	Input bias current	V_O = 1.4 V		25°C		−20	−250	nA
				Full range			−500	
V_{ICR}	Common-mode input voltage range	V_{CC} = 5 V to MAX		25°C	0 to V_{CC}−1.5			V
				Full range	0 to V_{CC}−2			
V_{OH}	High-level output voltage	$R_L \geq 10$ kΩ		25°C	V_{CC}−1.5			V
		V_{CC} = MAX, Non-V device	R_L = 2 kΩ	Full range	22			
			$R_L \geq 10$ kΩ	Full range	23	24		
		V_{CC} = MAX, V-suffix device	R_L = 2 kΩ	Full range	26			
			$R_L \geq 10$ kΩ	Full range	27	28		
V_{OL}	Low-level output voltage	$R_L \leq 10$ kΩ		Full range		5	20	mV
A_{VD}	Large-signal differential voltage amplification	V_{CC} = 15 V, V_O = 1 V to 11 V, R_L = ≥ 2 kΩ		25°C	25	100		V/mV
				Full range	15			
CMRR	Common-mode rejection ratio	V_{CC} = 5 V to MAX, $V_{IC} = V_{ICR(min)}$	Non-V device	25°C	50	80		dB
			V-suffix device	25°C	65	80		
k_{SVR}	Supply-voltage rejection ratio ($\Delta V_{DD}/\Delta V_{IO}$)	V_{CC} = 5 V to MAX		25°C	65	100		dB
V_{O1}/V_{O2}	Crosstalk attenuation	f = 1 kHz to 20 kHz		25°C		120		dB
I_O	Output current	V_{CC} = 15 V, V_{ID} = 1 V, V_O = 0		25°C	−20	−30		mA
				Full range	−10			
		V_{CC} = 15 V, V_{ID} = −1 V, V_O = 15 V		25°C	10	20		
				Full range	5			
		V_{ID} = −1 V, V_O = 200 mV	Non-V device	25°C		30		µA
			V-suffix device	25°C	12	40		
I_{OS}	Short-circuit output current	V_{CC} at 5 V, GND at −5 V, V_O = 0		25°C		±40	±60	mA
I_{CC}	Supply current (two amplifiers)	V_O = 2.5 V,	No load	Full range		0.7	1.2	mA
		V_{CC} = MAX, V_O = 0.5 V, No load		Full range		1	2	

† All characteristics are measured under open-loop conditions, with zero common-mode input voltage, unless otherwise specified. MAX V_{CC} for testing purposes is 26 V for the LM2904, 32 V for the LM2904V, and 30 V for others.
‡ Full range is −55°C to 125°C for LM158, −25°C to 85°C for LM258, 0°C to 70°C for LM358, and −40°C to 125°C for LM2904.
§ All typical values are at T_A = 25°C.

electrical characteristics at specified free-air temperature, V_{CC} = 5 V (unless otherwise noted)

PARAMETER		TEST CONDITIONS†		T_A‡	LM158A MIN	LM158A TYP§	LM158A MAX	LM258A MIN	LM258A TYP§	LM258A MAX	UNIT
V_{IO}	Input offset voltage	V_{CC} = 5 V to 30 V, $V_{IC} = V_{ICR(min)}$, V_O = 1.4 V		25°C			2		2	3	mV
				Full range			4			4	
$\alpha_{V_{IO}}$	Average temperature coefficient of input offset voltage			Full range		7	15*		7	15	µV/°C
I_{IO}	Input offset current	V_O = 1.4 V		25°C		2	10		2	15	nA
				Full range			30			30	
$\alpha_{I_{IO}}$	Average temperature coefficient of input offset current			Full range		10	200		10	200	pA/°C
I_{IB}	Input bias current	V_O = 1.4 V		25°C		−15	−50		−15	−80	nA
				Full range			−100			−100	
V_{ICR}	Common-mode input voltage range	V_{CC} = 30 V		25°C	0 to V_{CC}−1.5			0 to V_{CC}−1.5			V
				Full range	0 to V_{CC}−2			0 to V_{CC}−2			
V_{OH}	High-level output voltage	$R_L \geq 2$ kΩ		25°C	V_{CC}−1.5			V_{CC}−1.5			V
		V_{CC} = 30 V	R_L = 2 kΩ	Full range	26			26			
			$R_L \geq 10$ kΩ	Full range	27	28		27	28		
V_{OL}	Low-level output voltage	$R_L \leq 10$ kΩ		Full range		5	20		5	20	mV
A_{VD}	Large-signal differential voltage amplification	V_{CC} = 15 V, V_O = 1 V to 11 V, R_L = ≥ 2 kΩ		25°C	50	100		50	100		V/mV
				Full range	25			25			
CMRR	Common-mode rejection ratio			25°C	70	80		70	80		dB
k_{SVR}	Supply-voltage rejection ratio ($\Delta V_{DD}/\Delta V_{IO}$)			25°C	65	100		65	100		dB
V_{O1}/V_{O2}	Crosstalk attenuation	f = 1 kHz to 20 kHz		25°C		120			120		dB
I_O	Output current	V_{CC} = 15 V, V_{ID} = 1 V, V_O = 0		25°C	−20	−30	−60	−20	−30	−60	mA
				Full range	−10			−10			
		V_{CC} = 15 V, V_{ID} = −1 V, V_O = 15		25°C	10	20		10	20		
				Full range	5			5			
		V_{ID} = −1 V, V_O = 200 mV		25°C	12	30		12	30		µA
I_{OS}	Short-circuit output current	V_{CC} at 5 V, GND at −5 V, V_O = 0		25°C		±40	±60		±40	±60	mA
I_{CC}	Supply current (two amplifiers)	V_O = 2.5 V, No load		Full range		0.7	1.2		0.7	1.2	mA
		V_{CC} = MAX, V_O = 0.5 V, No load		Full range		1	2		1	2	

*On products compliant to MIL-PRF-38535, this parameter is not production tested.

† All characteristics are measured under open-loop conditions, with zero common-mode input voltage, unless otherwise specified. MAX V_{CC} for testing purposes is 26 V for LM2904 and 30 V for others.

‡ Full range is −55°C to 125°C for LM158A, −25°C to 85°C for LM258A, and 0°C to 70°C for LM358A.

§ All typical values are at T_A = 25°C.

electrical characteristics at specified free-air temperature, V_{CC} = 5 V (unless otherwise noted)

PARAMETER		TEST CONDITIONS†		T_A‡	LM358A MIN	LM358A TYP§	LM358A MAX	UNIT
V_{IO}	Input offset voltage	V_{CC} = 5 V to 30 V, $V_{IC} = V_{ICR(min)}$, V_O = 1.4 V		25°C		2	3	mV
				Full range			5	
$\alpha_{V_{IO}}$	Average temperature coefficient of input offset voltage			Full range		7	20	µV/°C
I_{IO}	Input offset current	V_O = 1.4 V		25°C		2	30	nA
				Full range			75	
$\alpha_{I_{IO}}$	Average temperature coefficient of input offset current			Full range		10	300	pA/°C
I_{IB}	Input bias current	V_O = 1.4 V		25°C		−15	−100	nA
				Full range			−200	
V_{ICR}	Common-mode input voltage range	V_{CC} = 30 V		25°C	0 to V_{CC}−1.5			V
				Full range	0 to V_{CC}−2			
V_{OH}	High-level output voltage	$R_L \geq 2$ kΩ		25°C	V_{CC}−1.5			V
		V_{CC} = 30 V	R_L = 2 kΩ	Full range	26			
			$R_L \geq 10$ kΩ	Full range	27	28		
V_{OL}	Low-level output voltage	$R_L \leq 10$ kΩ		Full range		5	20	mV
A_{VD}	Large-signal differential voltage amplification	V_{CC} = 15 V, V_O = 1 V to 11 V, $R_L = \geq 2$ kΩ		25°C	25	100		V/mV
				Full range	15			
CMRR	Common-mode rejection ratio			25°C	65	80		dB
k_{SVR}	Supply-voltage rejection ratio ($\Delta V_{DD}/\Delta V_{IO}$)			25°C	65	100		dB
V_{O1}/V_{O2}	Crosstalk attenuation	f = 1 kHz to 20 kHz		25°C		120		dB
I_O	Output current	V_{CC} = 15 V, V_{ID} = 1 V, V_O = 0		25°C	−20	−30	−60	mA
				Full range	−10			
		V_{CC} = 15 V, V_{ID} = −1 V, V_O = 15 V		25°C	10	20		
				Full range	5			
		V_{ID} = −1 V, V_O = 200 mV		25°C		30		µA
I_{OS}	Short-circuit output current	V_{CC} at 5 V, GND at −5 V, V_O = 0		25°C		±40	±60	mA
I_{CC}	Supply current (two amplifiers)	V_O = 2.5 V, No load		Full range		0.7	1.2	mA
		V_{CC} = MAX, V_O = 0.5 V No load		Full range		1	2	

† All characteristics are measured under open-loop conditions, with zero common-mode input voltage, unless otherwise specified. MAX V_{CC} for testing purposes is 26 V for LM2904 and 30 V for others.
‡ Full range is −55°C to 125°C for LM158A, −25°C to 85°C for LM258A, and 0°C to 70°C for LM358A.
§ All typical values are at T_A = 25°C.

operating conditions, V_{CC} = ±15 V, T_A = 25°C

PARAMETER		TEST CONDITIONS	TYP	UNIT
SR	Slew rate at unity gain	R_L = 1 MΩ, C_L = 30 pF, V_I = ±10 V (see Figure 1)	0.3	V/µs
B_1	Unity-gain bandwidth	R_L = 1 MΩ, C_L = 20 pF (see Figure 1)	0.7	MHz
V_n	Equivalent input noise voltage	R_S = 100 Ω, V_I = 0 V, f = 1 kHz (see Figure 2)	40	nV/√Hz

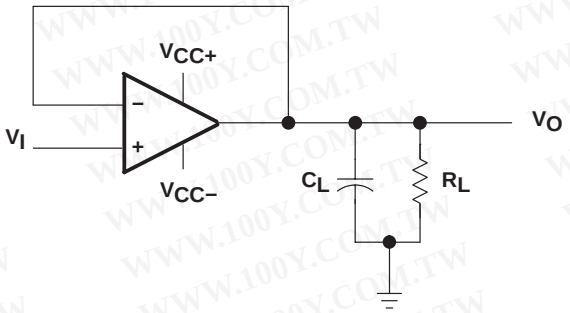

Figure 1. Unity-Gain Amplifier

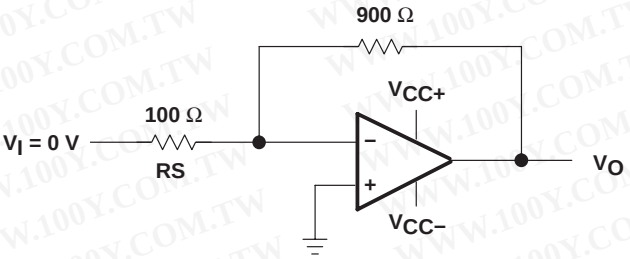

Figure 2. Noise-Test Circuit

JG (R-GDIP-T8) **CERAMIC DUAL-IN-LINE**

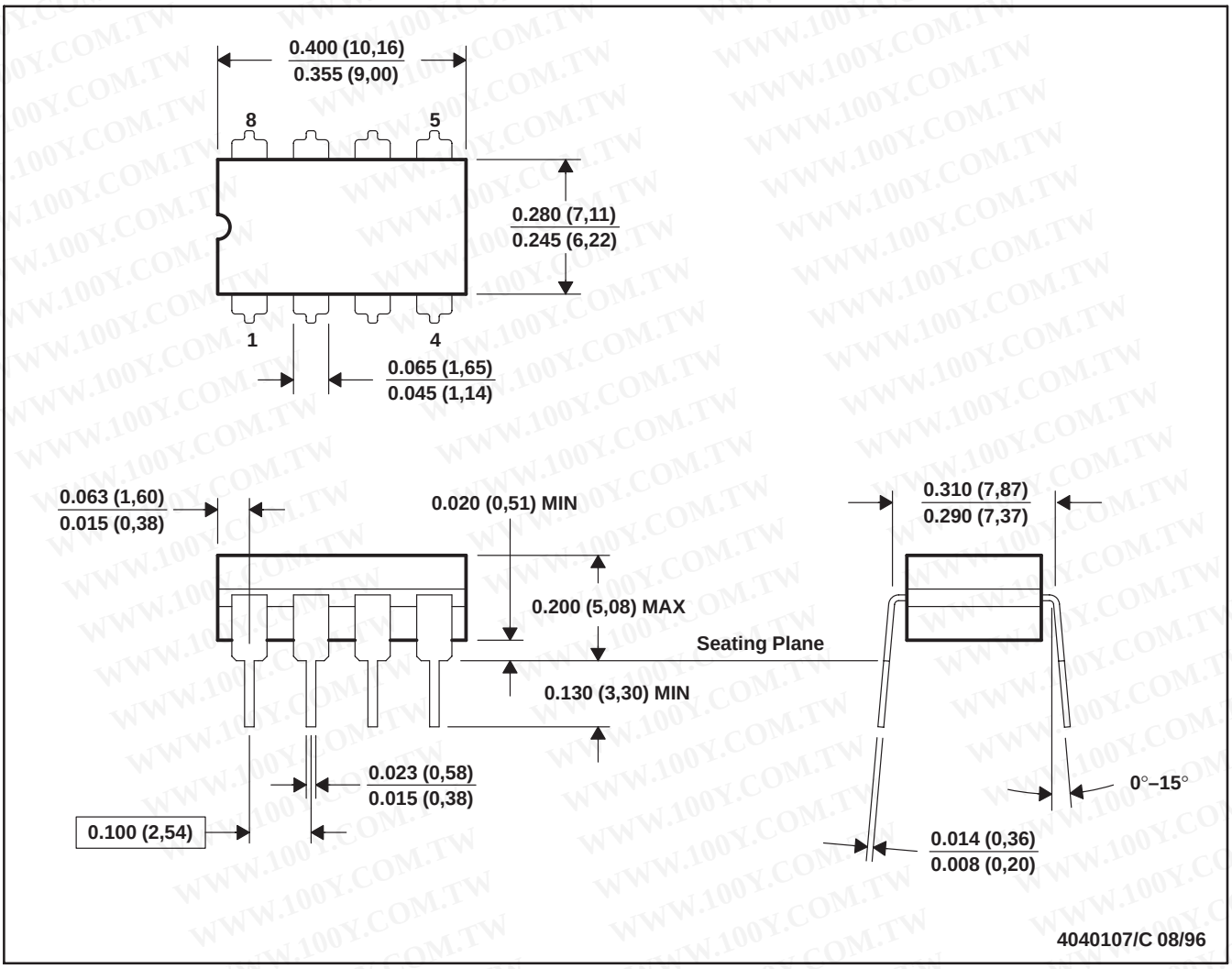

NOTES:
A. All linear dimensions are in inches (millimeters).
B. This drawing is subject to change without notice.
C. This package can be hermetically sealed with a ceramic lid using glass frit.
D. Index point is provided on cap for terminal identification.
E. Falls within MIL STD 1835 GDIP1-T8

FK (S-CQCC-N**)

LEADLESS CERAMIC CHIP CARRIER

28 TERMINAL SHOWN

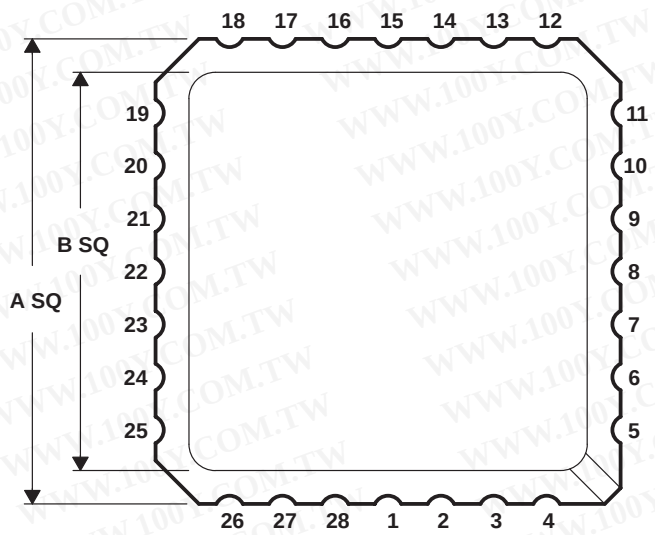

NO. OF TERMINALS **	A		B	
	MIN	MAX	MIN	MAX
20	0.342 (8,69)	0.358 (9,09)	0.307 (7,80)	0.358 (9,09)
28	0.442 (11,23)	0.458 (11,63)	0.406 (10,31)	0.458 (11,63)
44	0.640 (16,26)	0.660 (16,76)	0.495 (12,58)	0.560 (14,22)
52	0.739 (18,78)	0.761 (19,32)	0.495 (12,58)	0.560 (14,22)
68	0.938 (23,83)	0.962 (24,43)	0.850 (21,6)	0.858 (21,8)
84	1.141 (28,99)	1.165 (29,59)	1.047 (26,6)	1.063 (27,0)

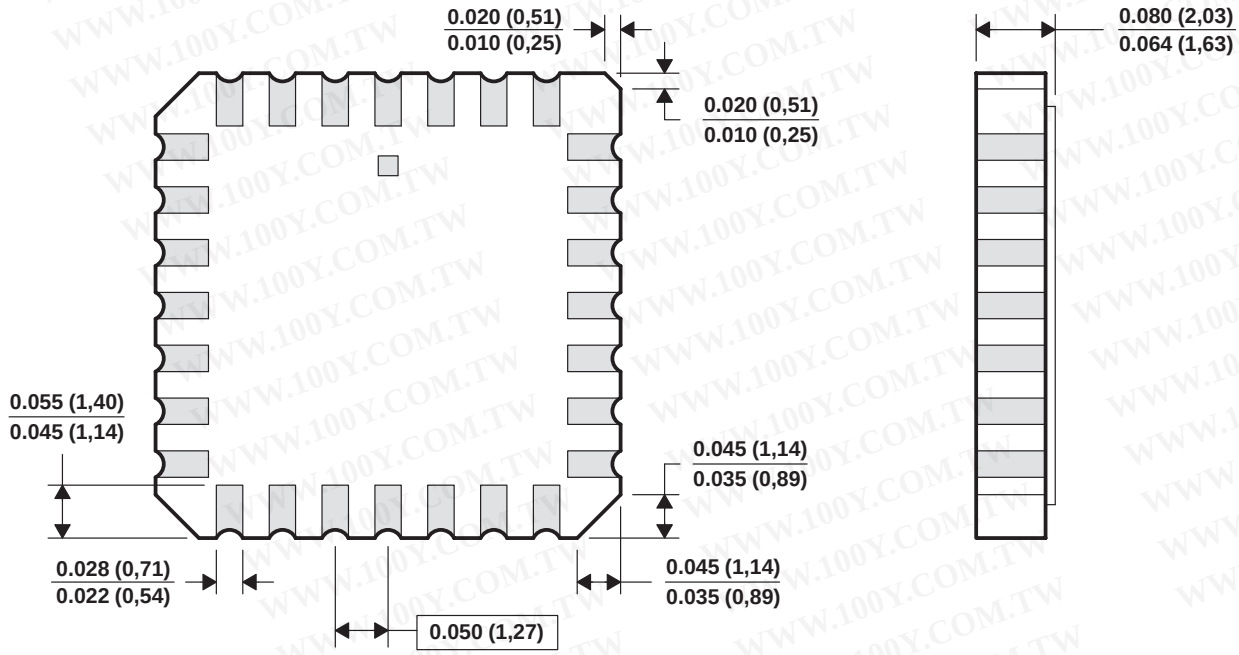

4040140/D 10/96

NOTES:
A. All linear dimensions are in inches (millimeters).
B. This drawing is subject to change without notice.
C. This package can be hermetically sealed with a metal lid.
D. The terminals are gold plated.
E. Falls within JEDEC MS-004

P (R-PDIP-T8) **PLASTIC DUAL-IN-LINE**

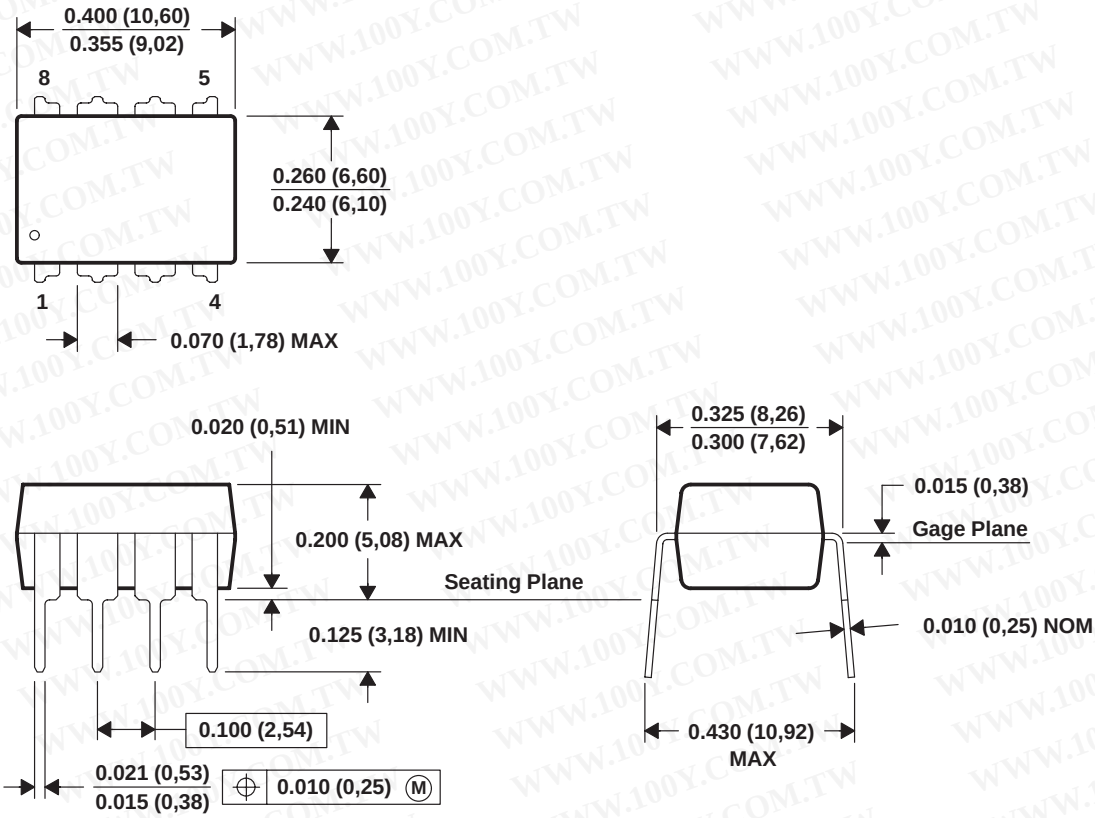

NOTES: A. All linear dimensions are in inches (millimeters).
B. This drawing is subject to change without notice.
C. Falls within JEDEC MS-001

For the latest package information, go to http://www.ti.com/sc/docs/package/pkg_info.htm

DGK (S-PDSO-G8) PLASTIC SMALL-OUTLINE PACKAGE

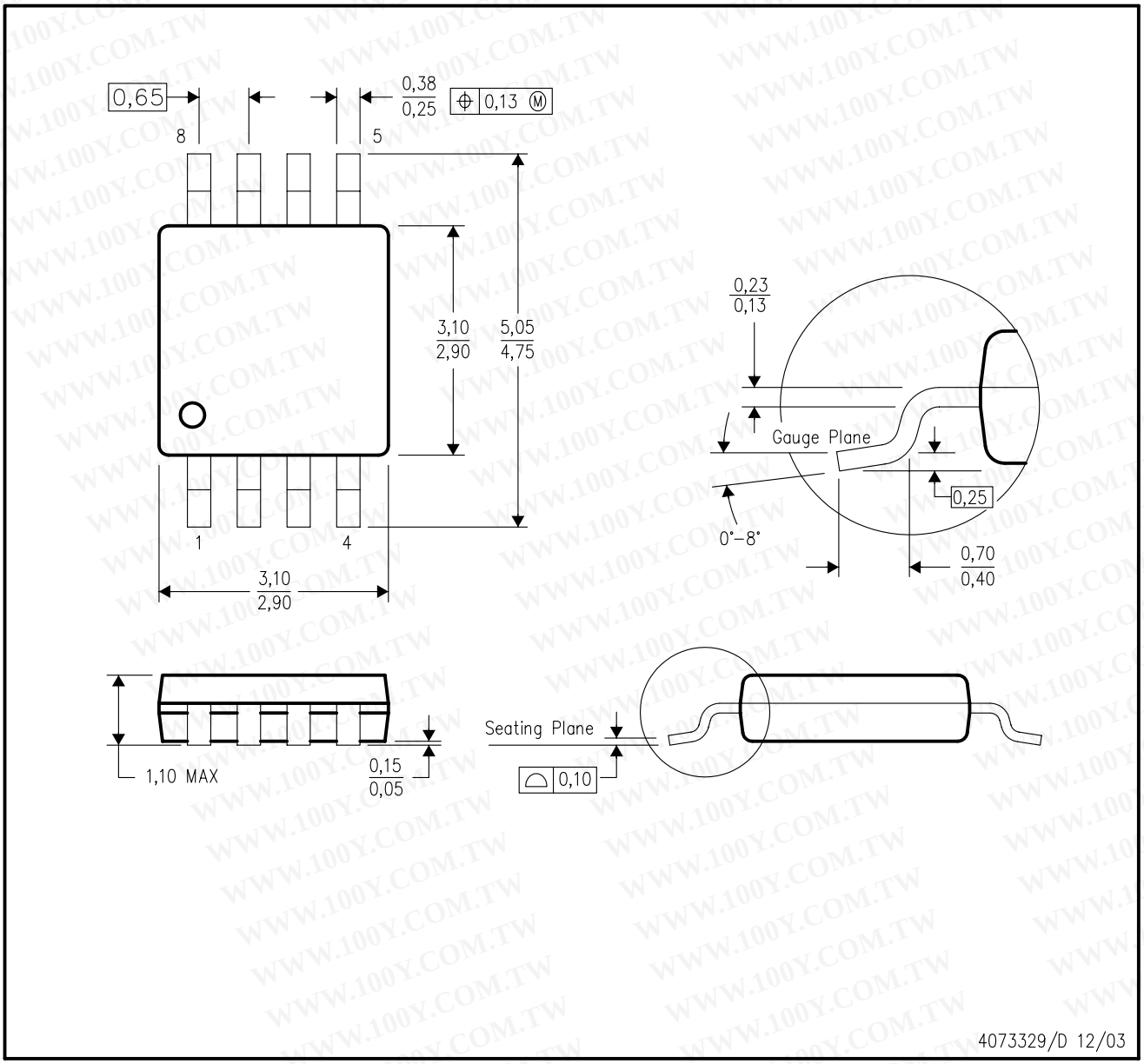

NOTES:
A. All linear dimensions are in millimeters.
B. This drawing is subject to change without notice.
C. Body dimensions do not include mold flash or protrusion.
D. Falls within JEDEC MO-187 variation AA.

D (R-PDSO-G)** **PLASTIC SMALL-OUTLINE PACKAGE**

8 PINS SHOWN

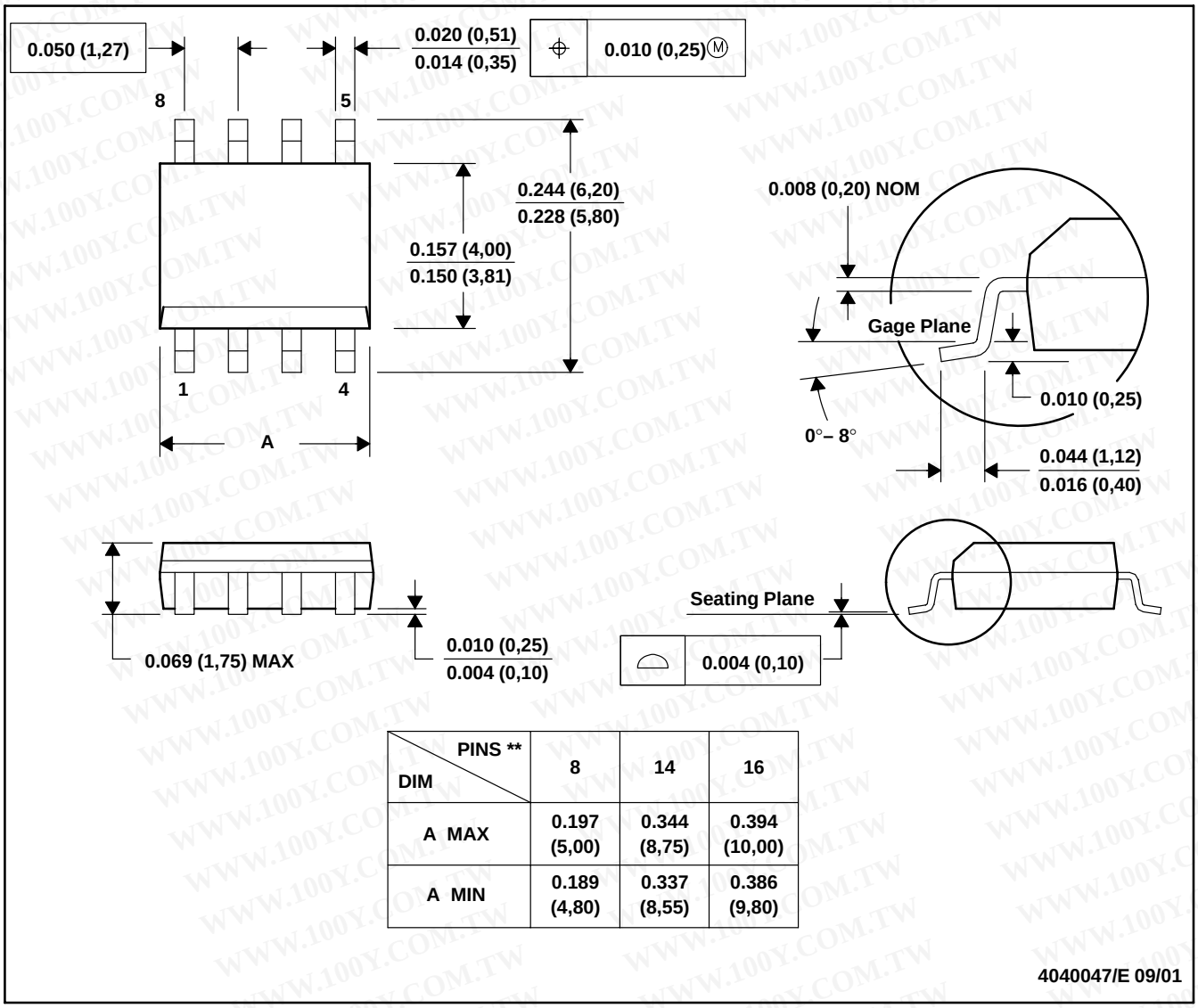

DIM \ PINS **	8	14	16
A MAX	0.197 (5,00)	0.344 (8,75)	0.394 (10,00)
A MIN	0.189 (4,80)	0.337 (8,55)	0.386 (9,80)

NOTES: A. All linear dimensions are in inches (millimeters).
B. This drawing is subject to change without notice.
C. Body dimensions do not include mold flash or protrusion, not to exceed 0.006 (0,15).
D. Falls within JEDEC MS-012

MECHANICAL DATA

PS (R-PDSO-G8) **PLASTIC SMALL-OUTLINE PACKAGE**

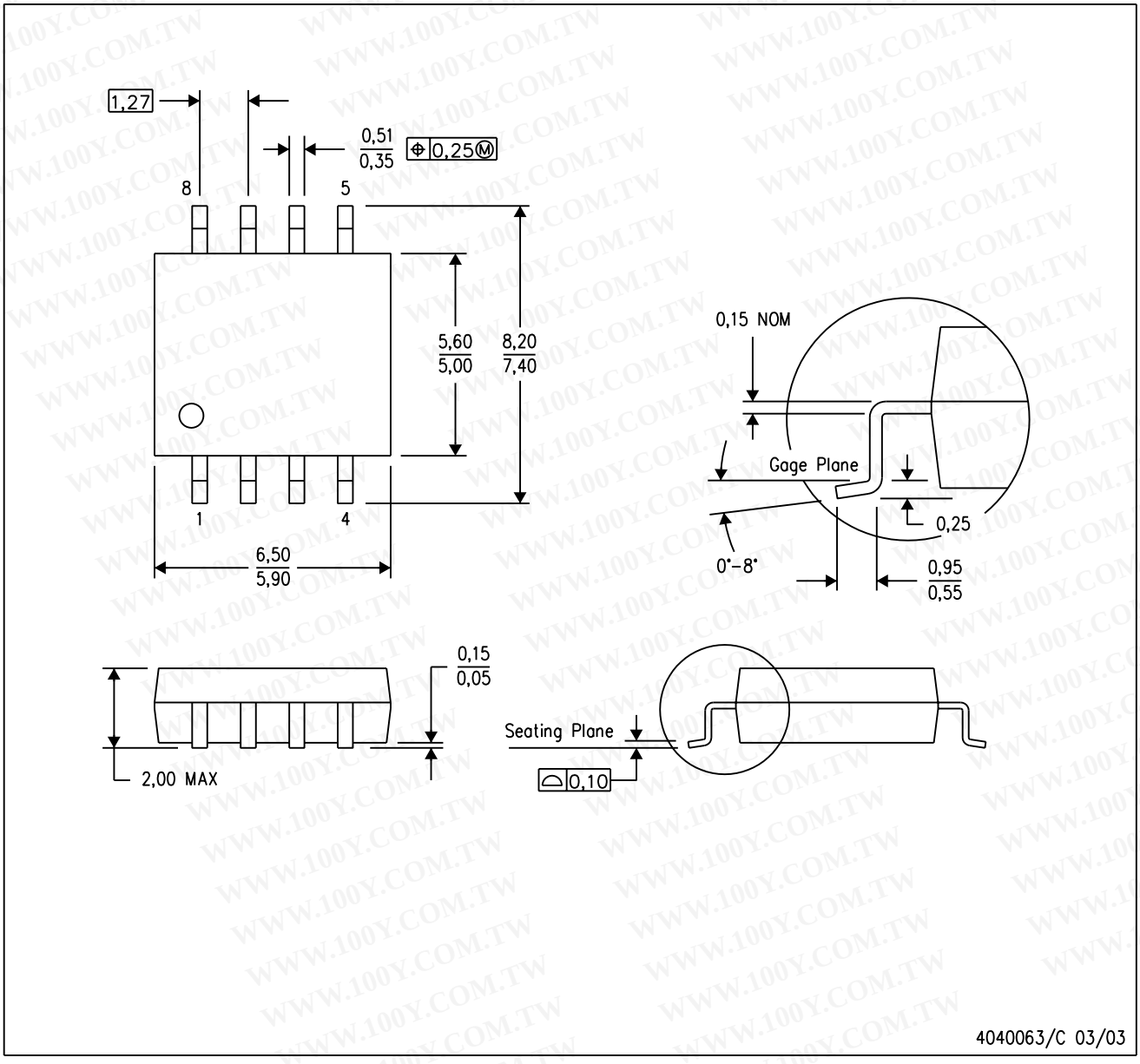

NOTES:
A. All linear dimensions are in millimeters.
B. This drawing is subject to change without notice.
C. Body dimensions do not include mold flash or protrusion, not to exceed 0,15.

PW (R-PDSO-G)** **PLASTIC SMALL-OUTLINE PACKAGE**

14 PINS SHOWN

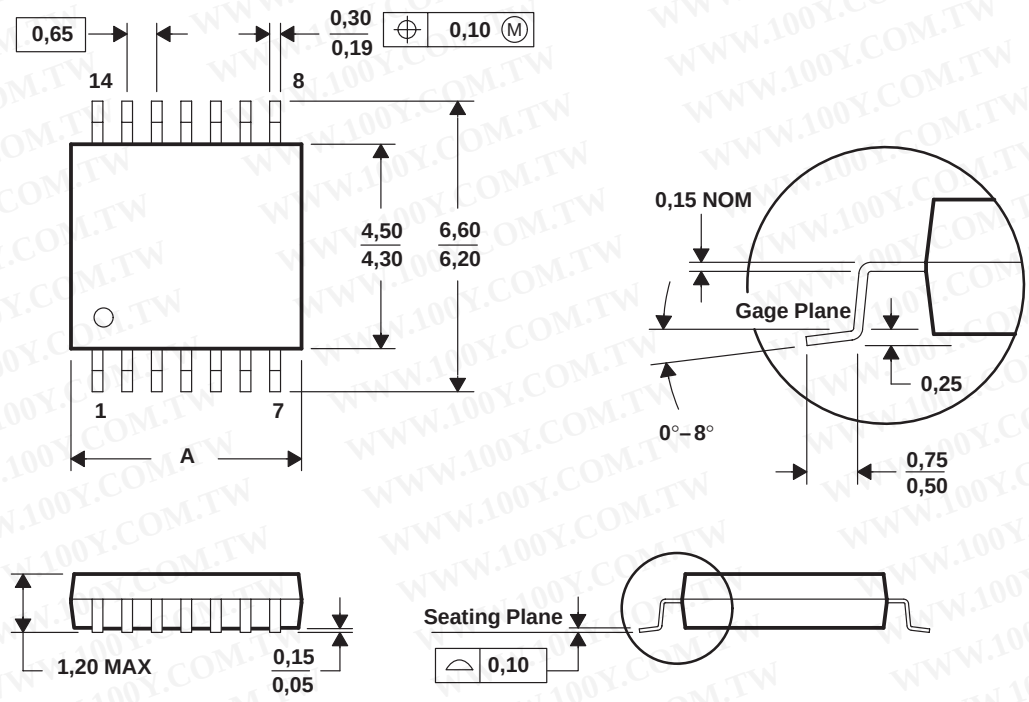

DIM \ PINS **	8	14	16	20	24	28
A MAX	3,10	5,10	5,10	6,60	7,90	9,80
A MIN	2,90	4,90	4,90	6,40	7,70	9,60

4040064/F 01/97

NOTES: A. All linear dimensions are in millimeters.
B. This drawing is subject to change without notice.
C. Body dimensions do not include mold flash or protrusion not to exceed 0,15.
D. Falls within JEDEC MO-153

IMPORTANT NOTICE

Texas Instruments Incorporated and its subsidiaries (TI) reserve the right to make corrections, modifications, enhancements, improvements, and other changes to its products and services at any time and to discontinue any product or service without notice. Customers should obtain the latest relevant information before placing orders and should verify that such information is current and complete. All products are sold subject to TI's terms and conditions of sale supplied at the time of order acknowledgment.

TI warrants performance of its hardware products to the specifications applicable at the time of sale in accordance with TI's standard warranty. Testing and other quality control techniques are used to the extent TI deems necessary to support this warranty. Except where mandated by government requirements, testing of all parameters of each product is not necessarily performed.

TI assumes no liability for applications assistance or customer product design. Customers are responsible for their products and applications using TI components. To minimize the risks associated with customer products and applications, customers should provide adequate design and operating safeguards.

TI does not warrant or represent that any license, either express or implied, is granted under any TI patent right, copyright, mask work right, or other TI intellectual property right relating to any combination, machine, or process in which TI products or services are used. Information published by TI regarding third-party products or services does not constitute a license from TI to use such products or services or a warranty or endorsement thereof. Use of such information may require a license from a third party under the patents or other intellectual property of the third party, or a license from TI under the patents or other intellectual property of TI.

Reproduction of information in TI data books or data sheets is permissible only if reproduction is without alteration and is accompanied by all associated warranties, conditions, limitations, and notices. Reproduction of this information with alteration is an unfair and deceptive business practice. TI is not responsible or liable for such altered documentation.

Resale of TI products or services with statements different from or beyond the parameters stated by TI for that product or service voids all express and any implied warranties for the associated TI product or service and is an unfair and deceptive business practice. TI is not responsible or liable for any such statements.

Following are URLs where you can obtain information on other Texas Instruments products and application solutions:

Products		**Applications**	
Amplifiers	amplifier.ti.com	Audio	www.ti.com/audio
Data Converters	dataconverter.ti.com	Automotive	www.ti.com/automotive
DSP	dsp.ti.com	Broadband	www.ti.com/broadband
Interface	interface.ti.com	Digital Control	www.ti.com/digitalcontrol
Logic	logic.ti.com	Military	www.ti.com/military
Power Mgmt	power.ti.com	Optical Networking	www.ti.com/opticalnetwork
Microcontrollers	microcontroller.ti.com	Security	www.ti.com/security
		Telephony	www.ti.com/telephony
		Video & Imaging	www.ti.com/video
		Wireless	www.ti.com/wireless

Mailing Address: Texas Instruments
Post Office Box 655303 Dallas, Texas 75265