勝 特 力 材 料 886-3-5753170
胜特力电子(上海) 86-21-54151736
胜特力电子(深圳) 86-755-83298787
Http://www.100y.com.tw

MC74HC540A

Octal 3-State Inverting Buffer/ Line Driver/Line Receiver

High–Performance Silicon–Gate CMOS

The MC74HC540A is identical in pinout to the LS540. The device inputs are compatible with Standard CMOS outputs. External pullup resistors make them compatible with LSTTL outputs.

The HC540A is an octal inverting buffer/line driver/line receiver designed to be used with 3–state memory address drivers, clock drivers, and other bus–oriented systems. This device features inputs and outputs on opposite sides of the package and two ANDed active–low output enables.

The HC540A is similar in function to the HC541A, which has non–inverting outputs.

- Output Drive Capability: 15 LSTTL Loads
- Outputs Directly Interface to CMOS, NMOS and TTL
- Operating Voltage Range: 2 to 6V
- Low Input Current: 1μA
- High Noise Immunity Characteristic of CMOS Devices
- In Compliance With the JEDEC Standard No. 7A Requirements
- Chip Complexity: 124 FETs or 31 Equivalent Gates

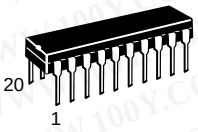

N SUFFIX
PLASTIC PACKAGE
CASE 738–03

DW SUFFIX
SOIC PACKAGE
CASE 751D–04

ORDERING INFORMATION

MC74HCXXXAN	Plastic
MC74HCXXXADW	SOIC

FUNCTION TABLE

Inputs			Output Y
OE1	OE2	A	
L	L	L	H
L	L	H	L
H	X	X	Z
X	H	X	Z

Z = High Impedance
X = Don't Care

LOGIC DIAGRAM

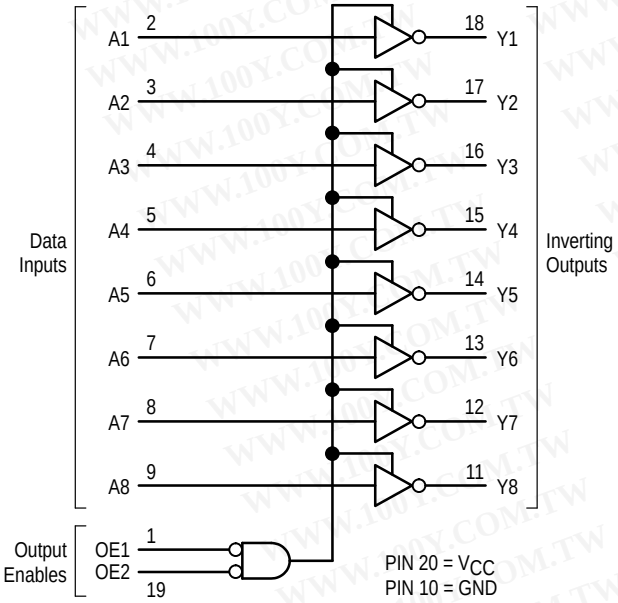

Pinout: 20–Lead Packages (Top View)

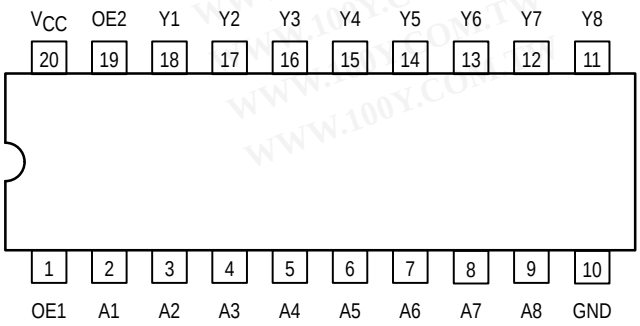

© Motorola, Inc. 1995

MOTOROLA

勝 特 力 材 料 886-3-5753170
胜特力电子(上海) 86-21-54151736
胜特力电子(深圳) 86-755-83298787
Http://www.100y.com.tw

MAXIMUM RATINGS*

Symbol	Parameter	Value	Unit
V_{CC}	DC Supply Voltage (Referenced to GND)	– 0.5 to + 7.0	V
V_{in}	DC Input Voltage (Referenced to GND)	– 0.5 to V_{CC} + 0.5	V
V_{out}	DC Output Voltage (Referenced to GND)	– 0.5 to V_{CC} + 0.5	V
I_{in}	DC Input Current, per Pin	± 20	mA
I_{out}	DC Output Current, per Pin	± 35	mA
I_{CC}	DC Supply Current, V_{CC} and GND Pins	± 75	mA
P_D	Power Dissipation in Still Air Plastic DIP†	750	mW
	SOIC Package†	500	
T_{stg}	Storage Temperature Range	– 65 to + 150	°C
T_L	Lead Temperature, 1 mm from Case for 10 Seconds Plastic DIP or SOIC Package	260	°C

This device contains protection circuitry to guard against damage due to high static voltages or electric fields. However, precautions must be taken to avoid applications of any voltage higher than maximum rated voltages to this high–impedance circuit. For proper operation, V_{in} and V_{out} should be constrained to the range GND ≤ (V_{in} or V_{out}) ≤ V_{CC}.

Unused inputs must always be tied to an appropriate logic voltage level (e.g., either GND or V_{CC}). Unused outputs must be left open.

* Maximum Ratings are those values beyond which damage to the device may occur.
Functional operation should be restricted to the Recommended Operating Conditions.
†Derating — Plastic DIP: – 10 mW/°C from 65° to 125°C
SOIC Package: – 7 mW/°C from 65° to 125°C
For high frequency or heavy load considerations, see Chapter 2 of the Motorola High–Speed CMOS Data Book (DL129/D).

RECOMMENDED OPERATING CONDITIONS

Symbol	Parameter	Min	Max	Unit
V_{CC}	DC Supply Voltage (Referenced to GND)	2.0	6.0	V
V_{in}, V_{out}	DC Input Voltage, Output Voltage (Referenced to GND)	0	V_{CC}	V
T_A	Operating Temperature Range, All Package Types	– 55	+ 125	°C
t_r, t_f	Input Rise/Fall Time (Figure 1) V_{CC} = 2.0 V	0	1000	ns
	V_{CC} = 4.5 V	0	500	
	V_{CC} = 6.0 V	0	400	

DC CHARACTERISTICS (Voltages Referenced to GND)

Symbol	Parameter	Condition	V_{CC} V	Guaranteed Limit –55 to 25°C	Guaranteed Limit ≤85°C	Guaranteed Limit ≤125°C	Unit
V_{IH}	Minimum High–Level Input Voltage	V_{out} = 0.1V, $\|I_{out}\|$ ≤ 20μA	2.0	1.50	1.50	1.50	V
			3.0	2.10	2.10	2.10	
			4.5	3.15	3.15	3.15	
			6.0	4.20	4.20	4.20	
V_{IL}	Maximum Low–Level Input Voltage	V_{out} = V_{CC} – 0.1V, $\|I_{out}\|$ ≤ 20μA	2.0	0.50	0.50	0.50	V
			3.0	0.90	0.90	0.90	
			4.5	1.35	1.35	1.35	
			6.0	1.80	1.80	1.80	
V_{OH}	Minimum High–Level Output Voltage	V_{in} = V_{IL}, $\|I_{out}\|$ ≤ 20μA	2.0	1.9	1.9	1.9	V
			4.5	4.4	4.4	4.4	
			6.0	5.9	5.9	5.9	
		V_{in} = V_{IL}, $\|I_{out}\|$ ≤ 3.6mA	3.0	2.48	2.34	2.20	
		$\|I_{out}\|$ ≤ 6.0mA	4.5	3.98	3.84	3.70	
		$\|I_{out}\|$ ≤ 7.8mA	6.0	5.48	5.34	5.20	
V_{OL}	Maximum Low–Level Output Voltage	V_{in} = V_{IH}, $\|I_{out}\|$ ≤ 20μA	2.0	0.1	0.1	0.1	V
			4.5	0.1	0.1	0.1	
			6.0	0.1	0.1	0.1	
		V_{in} = V_{IH}, $\|I_{out}\|$ ≤ 3.6mA	3.0	0.26	0.33	0.40	
		$\|I_{out}\|$ ≤ 6.0mA	4.5	0.26	0.33	0.40	
		$\|I_{out}\|$ ≤ 7.8mA	6.0	0.26	0.33	0.40	
I_{in}	Maximum Input Leakage Current	V_{in} = V_{CC} or GND	6.0	±0.1	±1.0	±1.0	μA

勝 特 力 材 料 886-3-5753170
胜特力电子(上海) 86-21-54151736
胜特力电子(深圳) 86-755-83298787
Http://www.100y.com.tw

DC CHARACTERISTICS (Voltages Referenced to GND)

Symbol	Parameter	Condition	V_{CC} V	Guaranteed Limit			Unit
				–55 to 25°C	≤85°C	≤125°C	
I_{OZ}	Maximum Three–State Leakage Current	Output in High Impedance State $V_{in} = V_{IL}$ or V_{IH} $V_{out} = V_{CC}$ or GND	6.0	±0.5	±5.0	±10.0	μA
I_{CC}	Maximum Quiescent Supply Current (per Package)	$V_{in} = V_{CC}$ or GND I_{out} = 0μA	6.0	4	40	160	μA

NOTE: Information on typical parametric values can be found in Chapter 2 of the Motorola High–Speed CMOS Data Book (DL129/D).

AC CHARACTERISTICS (C_L = 50 pF, Input $t_r = t_f$ = 6 ns)

Symbol	Parameter	V_{CC} V	Guaranteed Limit			Unit
			–55 to 25°C	≤85°C	≤125°C	
t_{PLH}, t_{PHL}	Maximum Propagation Delay, Input A to Output Y (Figures 1 and 3)	2.0 3.0 4.5 6.0	80 30 18 15	100 40 23 20	120 55 28 25	ns
t_{PLZ}, t_{PHZ}	Maximum Propagation Delay, Output Enable to Output Y (Figures 2 and 4)	2.0 3.0 4.5 6.0	110 45 25 21	140 60 31 26	165 75 38 31	ns
t_{PZL}, t_{PZH}	Maximum Propagation Delay, Output Enable to Output Y (Figures 2 and 4)	2.0 3.0 4.5 6.0	110 45 25 21	140 60 31 26	165 75 38 31	ns
t_{TLH}, t_{THL}	Maximum Output Transition Time, Any Output (Figures 1 and 3)	2.0 3.0 4.5 6.0	60 22 12 10	75 28 15 13	90 34 18 15	ns
C_{in}	Maximum Input Capacitance		10	10	10	pF
C_{out}	Maximum Three–State Output Capacitance (Output in High Impedance State)		15	15	15	pF

NOTE: For propagation delays with loads other than 50 pF, and information on typical parametric values, see Chapter 2 of the Motorola High–Speed CMOS Data Book (DL129/D).

		Typical @ 25°C, V_{CC} = 5.0 V, V_{EE} = 0 V	
C_{PD}	Power Dissipation Capacitance (Per Buffer)*	35	pF

* Used to determine the no–load dynamic power consumption: $P_D = C_{PD} V_{CC}^2 f + I_{CC} V_{CC}$. For load considerations, see Chapter 2 of the Motorola High–Speed CMOS Data Book (DL129/D).

SWITCHING WAVEFORMS

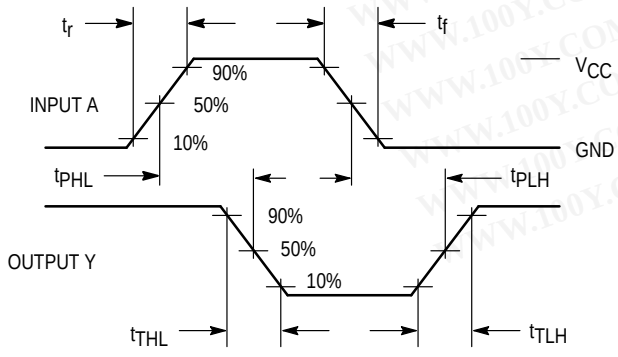

Figure 1.

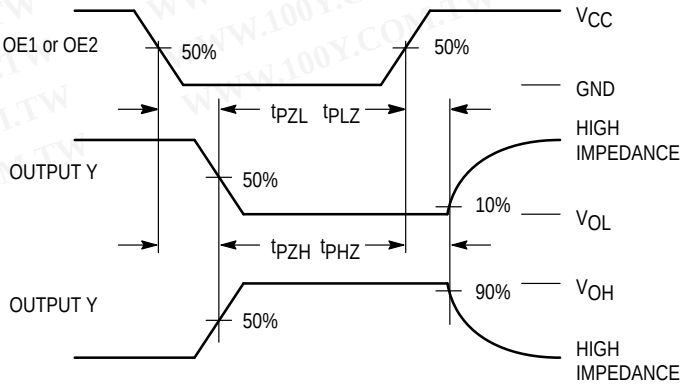

Figure 2.

勝 特 力 材 料 886-3-5753170
胜特力电子(上海) 86-21-54151736
胜特力电子(深圳) 86-755-83298787
Http://www.100y.com.tw

TEST CIRCUITS

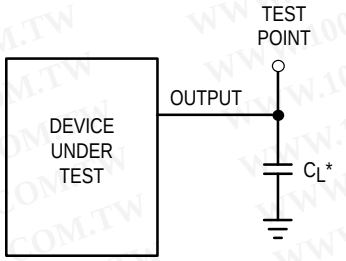

*Includes all probe and jig capacitance

Figure 3.

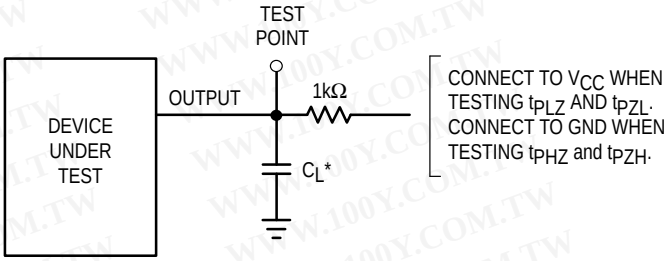

*Includes all probe and jig capacitance

Figure 4.

PIN DESCRIPTIONS

INPUTS

A1, A2, A3, A4, A5, A6, A7, A8 (PINS 2, 3, 4, 5, 6, 7, 8, 9) — Data input pins. Data on these pins appear in inverted form on the corresponding Y outputs, when the outputs are enabled.

CONTROLS

OE1, OE2 (PINS 1, 19) — Output enables (active–low). When a low voltage is applied to both of these pins, the outputs are enabled and the device functions as an inverter. When a hgih voltage is applied to either input, the outputs assume the high impedance state.

OUTPUTS

Y1, Y2, Y3, Y4, Y5, Y6, Y7, Y8 (PINS 18, 17, 16, 15, 14, 13, 12, 11) — Device outputs. Depending upon the state of the output enable pins, these outputs are either inverting outputs or high–impedance outputs.

LOGIC DETAIL

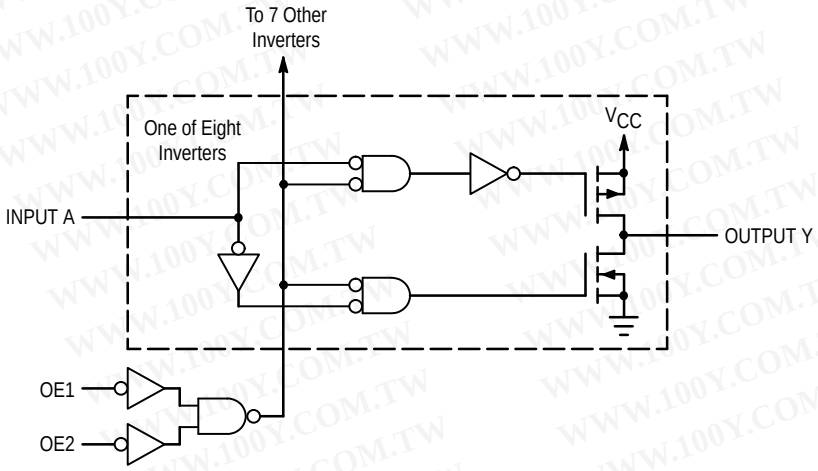

勝 特 力 材 料 886-3-5753170
胜特力电子(上海) 86-21-54151736
胜特力电子(深圳) 86-755-83298787
Http://www.100y.com.tw

OUTLINE DIMENSIONS

N SUFFIX
PLASTIC PACKAGE
CASE 738–03
ISSUE E

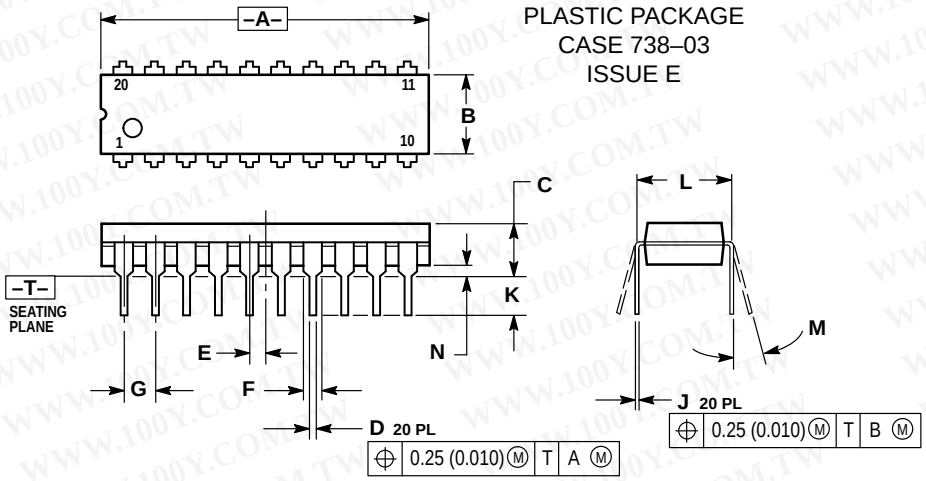

NOTES:
1. DIMENSIONING AND TOLERANCING PER ANSI Y14.5M, 1982.
2. CONTROLLING DIMENSION: INCH.
3. DIMENSION L TO CENTER OF LEAD WHEN FORMED PARALLEL.
4. DIMENSION B DOES NOT INCLUDE MOLD FLASH.

	INCHES		MILLIMETERS	
DIM	MIN	MAX	MIN	MAX
A	1.010	1.070	25.66	27.17
B	0.240	0.260	6.10	6.60
C	0.150	0.180	3.81	4.57
D	0.015	0.022	0.39	0.55
E	0.050 BSC		1.27 BSC	
F	0.050	0.070	1.27	1.77
G	0.100 BSC		2.54 BSC	
J	0.008	0.015	0.21	0.38
K	0.110	0.140	2.80	3.55
L	0.300 BSC		7.62 BSC	
M	0 °	15 °	0 °	15 °
N	0.020	0.040	0.51	1.01

DW SUFFIX
PLASTIC SOIC PACKAGE
CASE 751D–04
ISSUE E

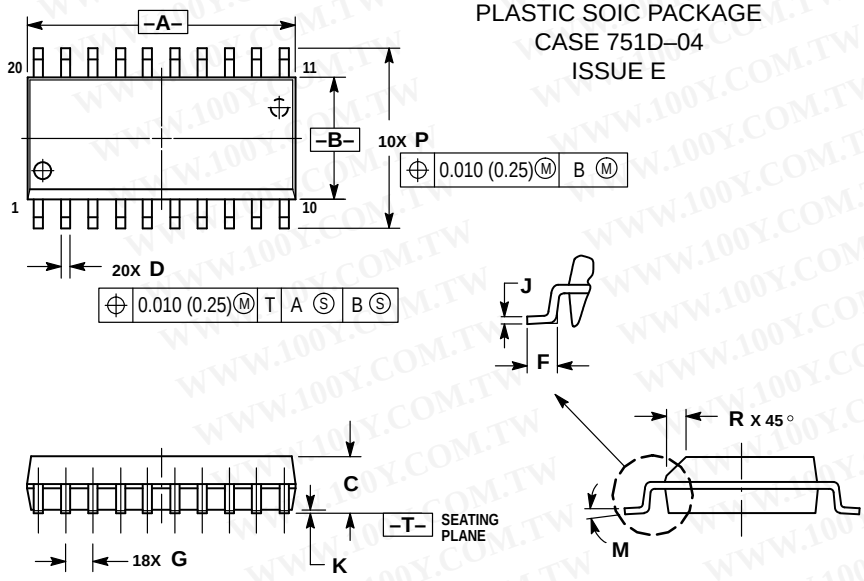

NOTES:
1. DIMENSIONING AND TOLERANCING PER ANSI Y14.5M, 1982.
2. CONTROLLING DIMENSION: MILLIMETER.
3. DIMENSIONS A AND B DO NOT INCLUDE MOLD PROTRUSION.
4. MAXIMUM MOLD PROTRUSION 0.150 (0.006) PER SIDE.
5. DIMENSION D DOES NOT INCLUDE DAMBAR PROTRUSION. ALLOWABLE DAMBAR PROTRUSION SHALL BE 0.13 (0.005) TOTAL IN EXCESS OF D DIMENSION AT MAXIMUM MATERIAL CONDITION.

	MILLIMETERS		INCHES	
DIM	MIN	MAX	MIN	MAX
A	12.65	12.95	0.499	0.510
B	7.40	7.60	0.292	0.299
C	2.35	2.65	0.093	0.104
D	0.35	0.49	0.014	0.019
F	0.50	0.90	0.020	0.035
G	1.27 BSC		0.050 BSC	
J	0.25	0.32	0.010	0.012
K	0.10	0.25	0.004	0.009
M	0 °	7 °	0 °	7 °
P	10.05	10.55	0.395	0.415
R	0.25	0.75	0.010	0.029

Motorola reserves the right to make changes without further notice to any products herein. Motorola makes no warranty, representation or guarantee regarding the suitability of its products for any particular purpose, nor does Motorola assume any liability arising out of the application or use of any product or circuit, and specifically disclaims any and all liability, including without limitation consequential or incidental damages. “Typical” parameters can and do vary in different applications. All operating parameters, including “Typicals” must be validated for each customer application by customer’s technical experts. Motorola does not convey any license under its patent rights nor the rights of others. Motorola products are not designed, intended, or authorized for use as components in systems intended for surgical implant into the body, or other applications intended to support or sustain life, or for any other application in which the failure of the Motorola product could create a situation where personal injury or death may occur. Should Buyer purchase or use Motorola products for any such unintended or unauthorized application, Buyer shall indemnify and hold Motorola and its officers, employees, subsidiaries, affiliates, and distributors harmless against all claims, costs, damages, and expenses, and reasonable attorney fees arising out of, directly or indirectly, any claim of personal injury or death associated with such unintended or unauthorized use, even if such claim alleges that Motorola was negligent regarding the design or manufacture of the part. Motorola and M are registered trademarks of Motorola, Inc. Motorola, Inc. is an Equal Opportunity/Affirmative Action Employer.