LM556/NE556
Dual Timer

勝 特 力 材 料 886-3-5753170
胜特力电子(上海) 86-21-54151736
胜特力电子(深圳) 86-755-83298787
Http://www.100y.com.tw

Features

- Replaces Two LM555/NE556 Timers
- Operates in Both Astable And Monostable Modes
- High Output Current
- TTL Compatible
- Timing From Microsecond To Hours
- Adjustable Duty Cycle
- Temperature Stability Of 0.005% Per °C

Applications

- Precision Timing
- Pulse Shaping
- Pulse Width Modulation
- Frequency Division
- Traffic Light Control
- Sequential Timing
- Pulse Generator
- Time Delay Generator
- Touch Tone Encoder
- Tone Burst Generator

Description

The LM556/NE556 series dual monolithic timing circuits are a highly stable controller capable of producing accurate time delays or oscillation. The LM556/NE556 is a dual LM555. Timing is provided an external resistor and capacitor for each timing function. The two timers operate independently of each other, sharing only V_{CC} and ground. The circuits may be triggered and reset on falling waveforms. The output structures may sink or source 200mA.

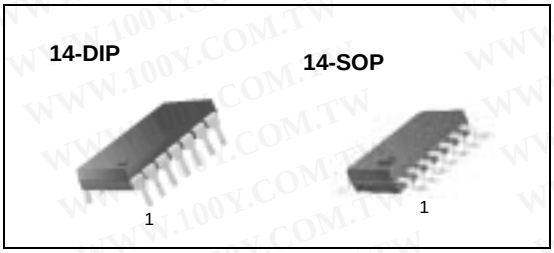

Internal Block Diagram

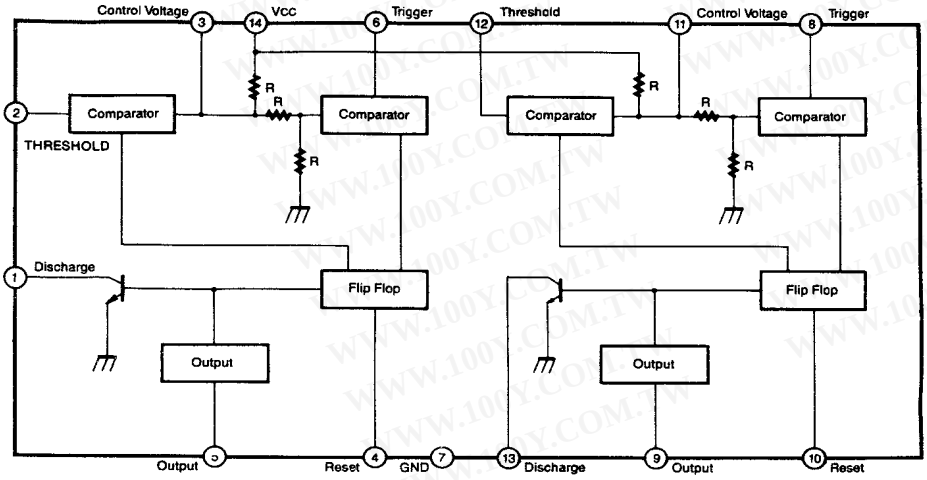

Rev. 1.0.0

©2001 Fairchild Semiconductor Corporation

Absolute Maximum Ratings (T_A = 25°C)

Parameter	Symbol	Value	Unit
Supply Voltage	V_{CC}	16	V
Lead Temperature (soldering 10sec)	T_{LEAD}	300	°C
Power Dissipation	P_D	600	mW
Operating Temperature Range LM556/NE556	T_{OPR}	0 ~ + 70	°C
Storage Temperature Range	T_{STG}	- 65 ~ + 150	°C

勝 特 力 材 料 886-3-5753170
胜特力电子(上海) 86-21-54151736
胜特力电子(深圳) 86-755-83298787
Http://www.100y.com.tw

勝 特 力 材 料 886-3-5753170
胜特力电子(上海) 86-21-54151736
胜特力电子(深圳) 86-755-83298787
Http://www.100y.com.tw

Electrical Characteristics

(T_A = 25°C, V_{CC} = 5 ~ 15V, unless otherwise specified)

Parameter	Symbol	Conditions	Min.	Typ.	Max.	Units
Supply Voltage	V_{CC}	-	4.5	-	16	V
Supply Current *1(two timers) (low state)	I_{CC}	V_{CC} = 5V, R_L = ∞ V_{CC} = 15V, R_L = ∞	-	5 16	12 30	mA mA
Timing Error *2(monostable) Initial Accuracy Drift with Temperature Drift with Supply Voltage	 ACCUR Δt/ΔT Δt/ΔV_{CC}	 R_A = 2KΩ to 100KΩ C = 0.1μF T = 1.1RC	-	 0.75 50 0.1	-	 % ppm/°C %/V
Control Voltage	V_C	V_{CC} = 15V	9.0	10.0	11.0	V
		V_{CC} = 5V	2.6	3.33	4.0	V
Threshold Voltage	V_{TH}	V_{CC} = 15V	8.8	10.0	11.2	V
		V_{CC} = 5V	2.4	3.33	4.2	V
Threshold Current*3	I_{TH}	-	-	30	250	nA
Trigger Voltage	V_{TR}	V_{CC} = 15V	4.5	5.0	5.6	V
		V_{CC} = 5V	1.1	1.6	2.2	V
Trigger Current	I_{TR}	V_{TR} = 0V	-	0.01	2.0	μA
Reset Voltage*5	V_{RST}	-	0.4	0.6	1.0	V
Reset Current	I_{RST}	-	-	0.03	0.6	mA
Low Output Voltage	V_{OL}	V_{CC} = 15V I_{SINK} = 10mA I_{SINK} = 50mA I_{SINK} = 100mA I_{SINK} = 200mA V_{CC} = 5V I_{SINK} = 8mA I_{SINK} = 5mA	-	 0.1 0.4 2.0 2.5 0.25 0.15	 0.25 0.75 3.2 0.35 0.25	V V
High Output Voltage	V_{OH}	V_{CC} = 15V I_{SOURCE} = 200mA I_{SOURCE} = 100mA	 12.75	 12.5 13.3	-	V
		V_{CC} = 5V I_{SOURCE} = 100mA	2.75	3.3	-	V
Rise Time of Output	t_R	-	-	100	300	ns
Fall Time of Output	t_F	-	-	100	300	ns
Discharge Leakage Current	I_{LKG}	-	-	10	100	nA
Matching Characteristics*4 Initial Accuracy Drift with Temperature Drfit with Supply Voltage	 ACCUR Δt/ΔT Δt/ΔV_{CC}	 -	-	 1.0 10 0.2	 2.0 0.5	 % ppm/°C %/V
Timing Error (astable)*2 Initial Accuracy Drift with Temperature Drift with Supply Voltage	 ACCUR Δt/ΔT Δt/ΔVcc	 V_{CC} = 15V R_A,R_B = 1KΩ to 100KΩ C = 0.1μF	-	 2.25 150 0.3	-	 % ppm/°C %/V

Notes:

*1. Supply current when output is high is typically 1.0mA less at V_{CC} = 5V

*2. Tested at V_{CC} = 5V and V_{CC} = 15V

*3. This will determine the maximum value of R_A + R_B for 15V operation.
The maximum total R = 20MΩ, and for 5V operation the maximum total R = 6.6MΩ.

*4. Matching characteristics refer to the difference between performance characteristics of each timer section in the monostable mode.

*5. As reset voltage lowers, timing is inhibited and then the output goes low.

勝 特 力 材 料 886-3-5753170
胜特力电子(上海) 86-21-54151736
胜特力电子(深圳) 86-755-83298787
Http://www.100y.com.tw

Mechanical Dimensions

Package

14-DIP

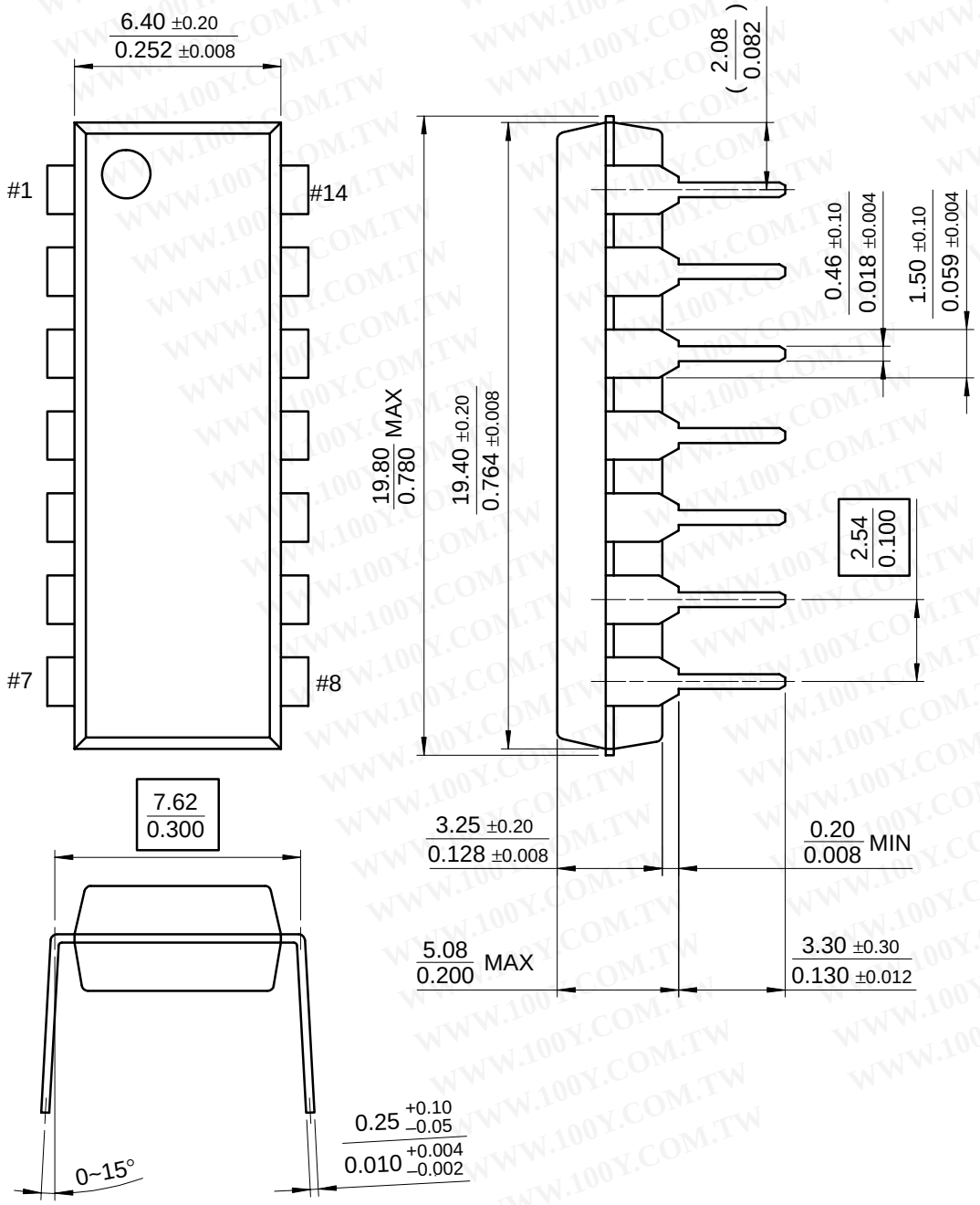

勝 特 力 材 料 886-3-5753170
胜特力电子(上海) 86-21-54151736
胜特力电子(深圳) 86-755-83298787
Http://www.100y.com.tw

Mechanical Dimensions (Continued)

Package

14-SOP

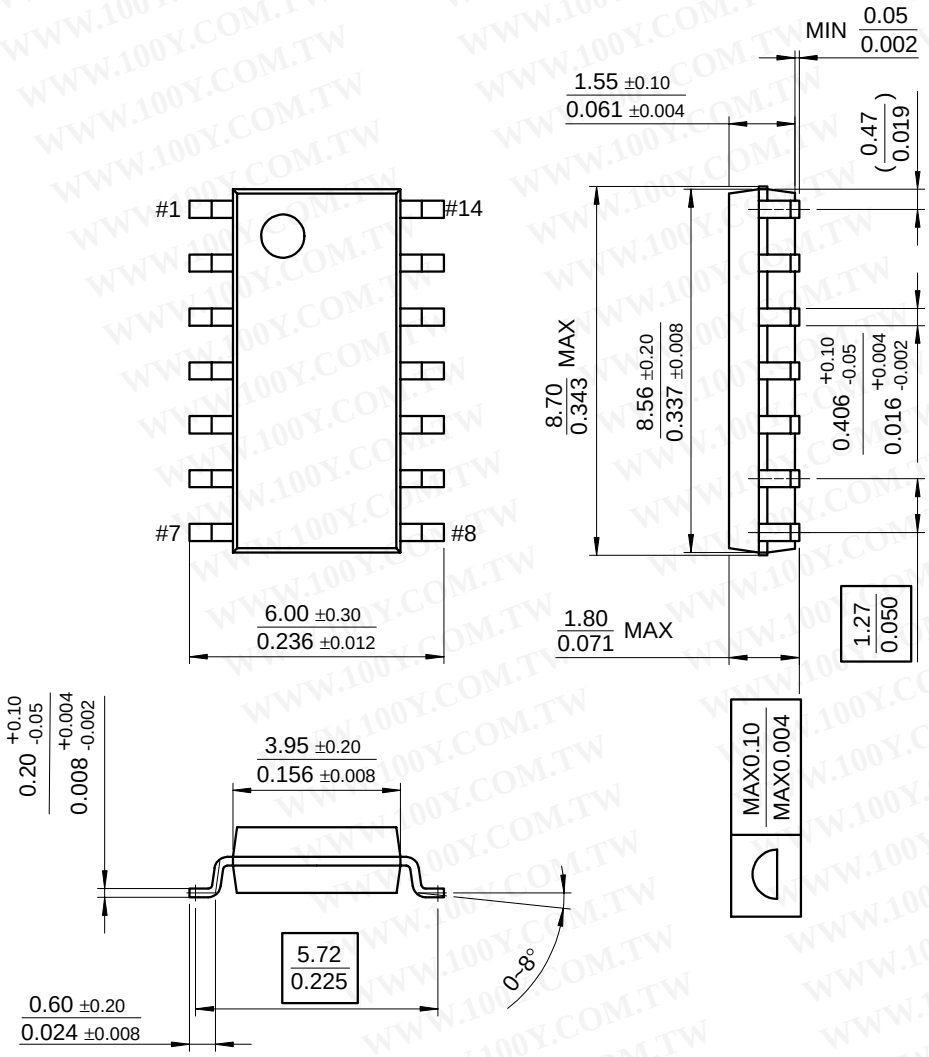

勝 特 力 材 料 886-3-5753170
胜特力电子(上海) 86-21-54151736
胜特力电子(深圳) 86-755-83298787
Http://www.100y.com.tw

Ordering Information

Product Number	Package	Operating Temperature
LM556CN	14-DIP	0 ~ + 70°C
LM556CM	14-SOP	
NE556	14-DIP	
NE556D	14-SOP	