DATA SHEET

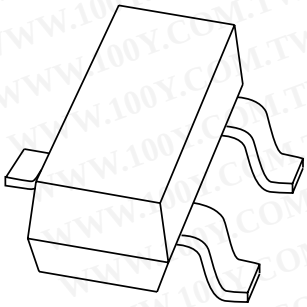

PMBT2907; PMBT2907A
PNP switching transistors

Product specification
Supersedes data of 1997 May 07
File under Discrete Semiconductors, SC04

1997 Sep 04

Philips
Semiconductors

PHILIPS

PNP switching transistors

PMBT2907; PMBT2907A

FEATURES

- High current (max. 600 mA)
- Low voltage (max. 60 V).

APPLICATIONS

- Switching and linear amplification.

DESCRIPTION

PNP switching transistor in a SOT23 plastic package.
NPN complements: PMBT2222 and PMBT2222A.

MARKING

TYPE NUMBER	MARKING CODE
PMBT2907	p2B
PMBT2907A	p2F

PINNING

PIN	DESCRIPTION
1	base
2	emitter
3	collector

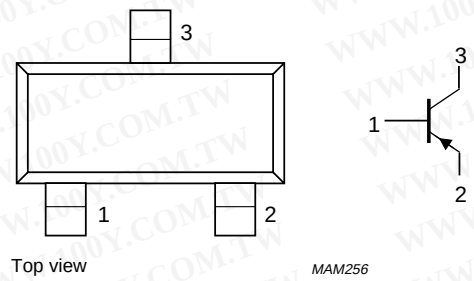

Fig.1 Simplified outline (SOT23) and symbol.

QUICK REFERENCE DATA

SYMBOL	PARAMETER	CONDITIONS	MIN.	MAX.	UNIT
V_{CBO}	collector-base voltage	open emitter	–	–60	V
V_{CEO}	collector-emitter voltage	open base			
	PMBT2907		–	–40	V
	PMBT2907A		–	–60	V
I_C	collector current (DC)		–	–600	mA
P_{tot}	total power dissipation	$T_{amb} \leq 25$ °C	–	250	mW
h_{FE}	DC current gain	$I_C = -500$ mA; $V_{CE} = -10$ V			
	PMBT2907		30	–	
	PMBT2907A		50	–	
f_T	transition frequency	$I_C = -50$ mA; $V_{CE} = -20$ V; f = 100 MHz	200	–	MHz
t_{off}	turn-off time	$I_{Con} = -150$ mA; $I_{Bon} = -15$ mA; $I_{Boff} = 15$ mA	–	365	ns

LIMITING VALUES

In accordance with the Absolute Maximum Rating System (IEC 134).

SYMBOL	PARAMETER	CONDITIONS	MIN.	MAX.	UNIT
V_{CBO}	collector-base voltage	open emitter	–	–60	V
V_{CEO}	collector-emitter voltage	open base			
	PMBT2907		–	–40	V
	PMBT2907A		–	–60	V
V_{EBO}	emitter-base voltage	open collector	–	–5	V
I_C	collector current (DC)		–	–600	mA
I_{CM}	peak collector current		–	–800	mA
I_{BM}	peak base current		–	–200	mA
P_{tot}	total power dissipation	$T_{amb} \leq 25$ °C	–	250	mW
T_{stg}	storage temperature		–65	+150	°C
T_j	junction temperature		–	150	°C
T_{amb}	operating ambient temperature		–65	+150	°C

THERMAL CHARACTERISTICS

SYMBOL	PARAMETER	CONDITIONS	VALUE	UNIT
$R_{th\ j\text{-}a}$	thermal resistance from junction to ambient	note 1	500	K/W

Note

1. Transistor mounted on an FR4 printed-circuit board.

CHARACTERISTICS

T_j = 25 °C unless otherwise specified.

SYMBOL	PARAMETER	CONDITIONS	MIN.	MAX.	UNIT
I_{CBO}	collector cut-off current	$I_E = 0$; $V_{CB} = -50$ V			
	PMBT2907		–	–20	nA
	PMBT2907A		–	–10	nA
I_{CBO}	collector cut-off current	$I_E = 0$; $V_{CB} = -50$ V; $T_j = 125$ °C			
	PMBT2907		–	–20	µA
	PMBT2907A		–	–10	µA
I_{EBO}	emitter cut-off current	$I_C = 0$; $V_{EB} = -5$ V	–	–50	nA
h_{FE}	DC current gain	$I_C = -0.1$ mA; $V_{CE} = -10$ V			
	PMBT2907		35	–	
	PMBT2907A		75	–	
h_{FE}	DC current gain	$I_C = -1$ mA; $V_{CE} = -10$ V			
	PMBT2907		50	–	
	PMBT2907A		100	–	

SYMBOL	PARAMETER	CONDITIONS	MIN.	MAX.	UNIT
h_{FE}	DC current gain PMBT2907 PMBT2907A	I_C = –10 mA; V_{CE} = –10 V	 75 100	 – –	
h_{FE}	DC current gain	I_C = –150 mA; V_{CE} = –10 V	100	300	
h_{FE}	DC current gain PMBT2907 PMBT2907A	I_C = –500 mA; V_{CE} = –10 V	 30 50	 – –	
V_{CEsat}	collector-emitter saturation voltage	I_C = –150 mA; I_B = –15 mA	–	–400	mV
		I_C = –500 mA; I_B = –50 mA	–	–1.6	V
V_{BEsat}	base-emitter saturation voltage	I_C = –150 mA; I_B = –15 mA	–	–1.3	V
		I_C = –500 mA; I_B = –50 mA	–	–2.6	V
C_c	collector capacitance	I_E = i_e = 0; V_{CB} = –10 V; f = 1 MHz	–	8	pF
C_e	emitter capacitance	I_C = i_c = 0; V_{EB} = –2 V; f = 1 MHz	–	30	pF
f_T	transition frequency	I_C = –50 mA; V_{CE} = –20 V; f = 100 MHz	200	–	MHz
Switching times (between 10% and 90% levels); see Fig.2					
t_{on}	turn-on time	I_{Con} = –150 mA; I_{Bon} = –15 mA; I_{Boff} = 15 mA	–	40	ns
t_d	delay time		–	12	ns
t_r	rise time		–	30	ns
t_{off}	turn-off time		–	365	ns
t_s	storage time		–	300	ns
t_f	fall time		–	65	ns

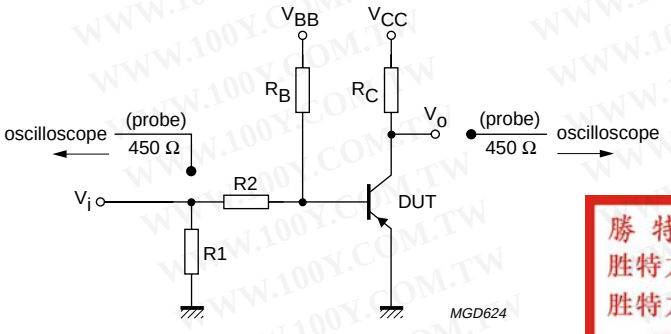

V_i = –9.5 V; T = 500 µs; t_p = 10 µs; t_r = t_f ≤ 3 ns.
R1 = 68 Ω; R2 = 325 Ω; R_B = 325 Ω; R_C = 160 Ω.
V_{BB} = 3.5 V; V_{CC} = –29.5 V.
Oscilloscope: input impedance Z_i = 50 Ω.

Fig.2 Test circuit for switching times.

PACKAGE OUTLINE

Plastic surface mounted package; 3 leads **SOT23**

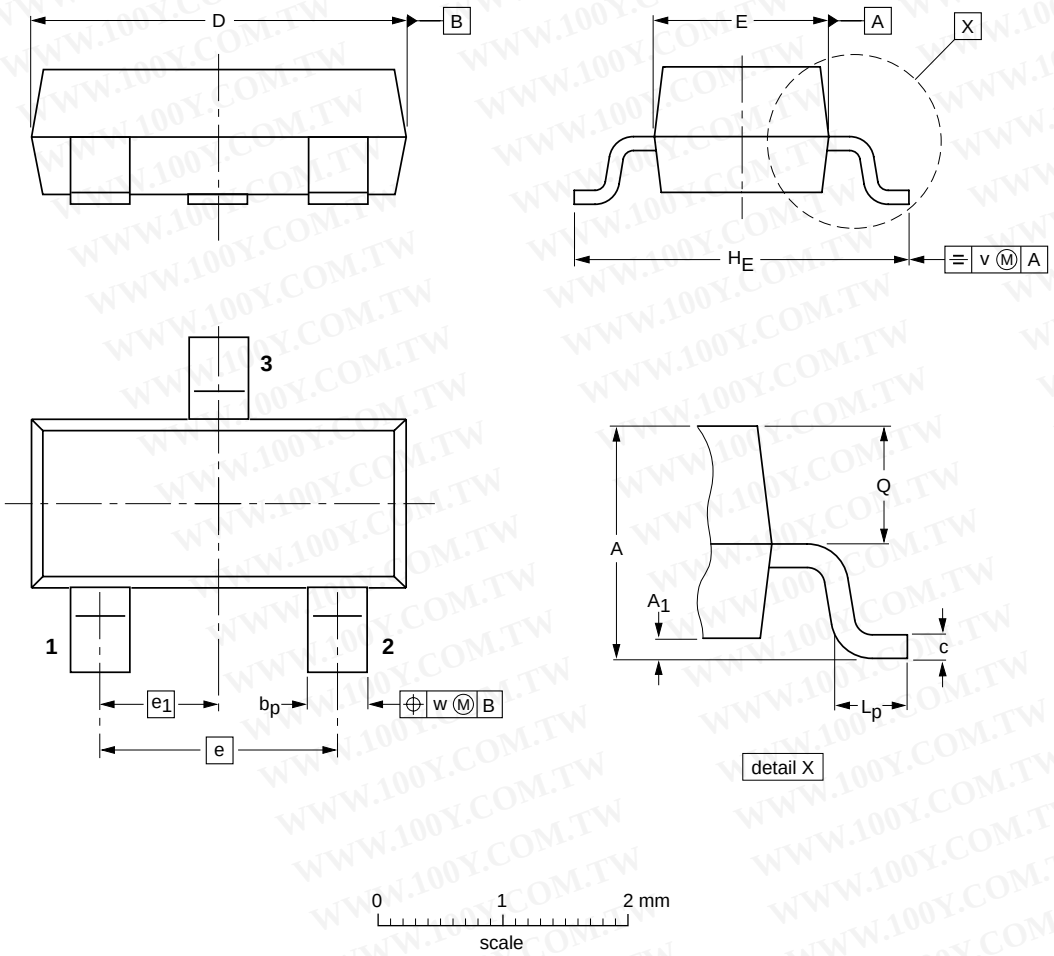

DIMENSIONS (mm are the original dimensions)

UNIT	A	A_1 max.	b_p	c	D	E	e	e_1	H_E	L_p	Q	v	w
mm	1.1 0.9	0.1	0.48 0.38	0.15 0.09	3.0 2.8	1.4 1.2	1.9	0.95	2.5 2.1	0.45 0.15	0.55 0.45	0.2	0.1

OUTLINE VERSION	REFERENCES				EUROPEAN PROJECTION	ISSUE DATE
	IEC	JEDEC	EIAJ			
SOT23						97-02-28

DEFINITIONS

Data sheet status	
Objective specification	This data sheet contains target or goal specifications for product development.
Preliminary specification	This data sheet contains preliminary data; supplementary data may be published later.
Product specification	This data sheet contains final product specifications.
Limiting values	
Limiting values given are in accordance with the Absolute Maximum Rating System (IEC 134). Stress above one or more of the limiting values may cause permanent damage to the device. These are stress ratings only and operation of the device at these or at any other conditions above those given in the Characteristics sections of the specification is not implied. Exposure to limiting values for extended periods may affect device reliability.	
Application information	
Where application information is given, it is advisory and does not form part of the specification.	

LIFE SUPPORT APPLICATIONS

These products are not designed for use in life support appliances, devices, or systems where malfunction of these products can reasonably be expected to result in personal injury. Philips customers using or selling these products for use in such applications do so at their own risk and agree to fully indemnify Philips for any damages resulting from such improper use or sale.