CHIP RESISTORS
晶片電阻

勝 特 力 材 料 886-3-5753170
胜特力电子(上海) 86-21-54151736
胜特力电子(深圳) 86-755-83298787
Http://www.100y.com.tw

FEATURES

The chip resistor is metal glazed thick film on high purity ceramic substrate and by protective glass paste,it provides uniform quality and stable characteristice. Latest automated system plus high technology enable us to tum out quality product with competitrive price.

晶片電阻是採用精純氧化鋁結陶瓷基板印上高品質金屬厚膜導體。外唇塗上玻璃鈾保護體，產生出均勻晶體的品質及穩定的特性。最新自動化設備，大量生產，品質穩定及價格合理化，符合新時代電子印刷基板廣泛使用。

＊High reliability and stability
＊Reduced size of final equipment
＊Lower assembly costs
＊Higher component and equipment reliability

＊普遍用途應用

Description

The resistors are constructed in a high grade ceramic body(atuminum oxide). Internal metal electrodes are added at each end and connected by a resistive paste that is applied to the top surfaoe of the subutrate. The composition of the paste is adjusted to give the approximate resistance required and the value is trimmed to within tolerance by laser cutting of this resistive layer. The resistive layer is covered with a protective coat. Finally, the two external and terminations are added. For ease of soldering the outer layer of these end terminations is a Lead-tin or Tin solder alloy.

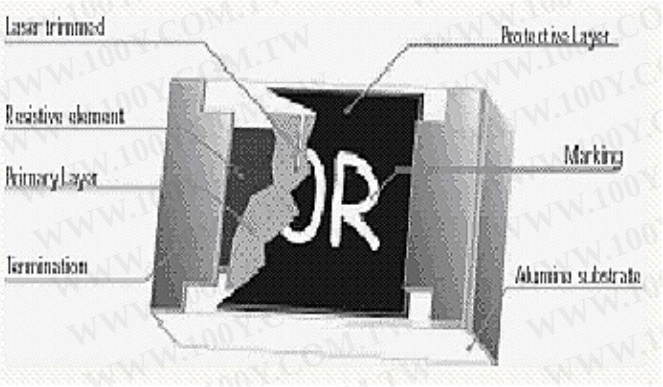

Physical Dimensions

Unit : mm

Size	L	W	T	Tb	Tt
2512 (6432)	6.40±0.20	3.20±0.20	0.060±0.10	0.90±0.25	0.65±0.25
2010 (5025)	5.00±0.20	2.50±0.20	0.55±0.10	0.60±0.25	0.65±0.25
1210 (3248)	3.05±0.15	4.60±0.20	0.55±0.10	0.50±0.25	0.45±0.25
1206 (3216)	3.10±0.10	1.60±0.10	0.60±0.15	0.45±0.20	0.50±0.20
0805 (2012)	2.00±0.10	1.25±0.10	0.50±0.15	0.40±0.20	0.40±0.20
0603 (1608)	1.60±0.10	0.80±0.10	0.45±0.15	0.30±0.15	0.30±0.10
0402 (1005)	1.00±0.05	0.50±0.05	0.35±0.05	0.25±0.10	0.20±0.10
0201 (0603)	0.60±0.03	0.30±0.03	0.25±0.05	0.15±0.05	0.15±0.05

Power Deration Curve

For resistors operated in ambient temperature over 70°C, power rating should be derated in accordance with the following figures.

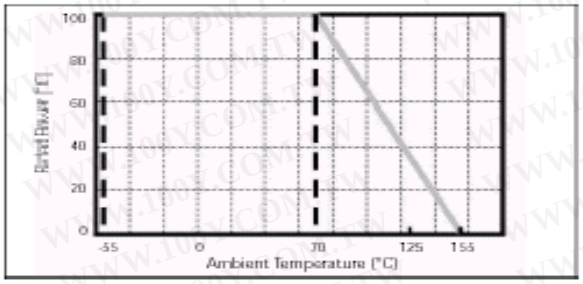

For Climatic category (IEC 60068) 55/155/56

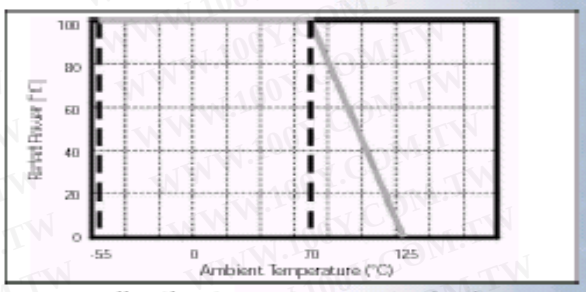

For Climatic category (IEC 60068) 55/125/56

RATING

TYPE	Rated Power at 70℃	Max. Working Voltage	Max. Overload Voltage	Resistance Range		Operating Temp Range
				1%, E-96	5%, E-24	
0201	1/20W	15V	30V	100Ω~100KΩ	10Ω~1MΩ	-55℃~+125℃
0402	1/16W	25V	50V	10Ω~1MΩ	1Ω~10MΩ	-55℃~+125℃
0603	1/10W	50V	100V	10Ω~1MΩ	1Ω~10MΩ	-55℃~+125℃
0805	1/8W	150V	300V	10Ω~1MΩ	1Ω~10MΩ	-55℃~+125℃
1206	1/4W	200V	400V	10Ω~1MΩ	1Ω~10MΩ	-55℃~+125℃
1210	1/3W	200V	400V	10Ω~1MΩ	1Ω~10MΩ	-55℃~+125℃
2010	1/2W	200V	400V	10Ω~1MΩ	1Ω~10MΩ	-55℃~+125℃
2512	1W	200V	400V	10Ω~1MΩ	1Ω~10MΩ	-55℃~+125℃

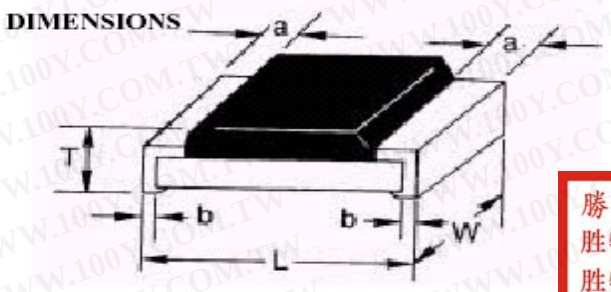

勝 特 力 材 料 886-3-5753170
胜特力电子(上海) 86-21-54151736
胜特力电子(深圳) 86-755-83298787
Http://www.100y.com.tw

Physical Dimensions

Unit : mm

TYPE	L	W	T	a	b
CR-01	0.60±0.03	0.30±0.03	0.23±0.03	0.15±0.05	0.15±0.05
CR-02	1.00±0.05	0.50±0.05	0.35±0.05	0.20±0.10	0.25±0.10
CR-03	1.60±0.10	0.80±0.10	0.45±0.10	0.30±0.20	0.30±0.20
CR-05	2.00±0.10	1.25±0.10	0.50±0.10	0.35±0.20	0.40±0.20
CR-06	3.10±0.10	1.55±0.10	0.55±0.10	0.50±0.25	0.50±0.20
CR-10	3.20±0.20	2.60±0.15	0.55±0.10	0.50±0.25	0.50±0.20
CR	5.00±0.20	2.50±0.20	0.55±0.10	0.60±0.25	0.50±0.20
CR-12	6.35±0.20	3.20±0.15	0.55±0.10	0.60±0.25	0.50±0.20

HARACTERISTICS

TEST ITEM	DESCRIPTION	TEST METHODS
Temperature Coefficient Of resistance	Temp:-55℃~±125℃ Requirement:5%1Ω~10Ω≦±400PPM/℃ 11Ω~≦200PPM/℃ 1%10Ω~1mΩ≦±100ppm/℃	JIS C 5202.....clause 5.2 Natural resistance change per temperature degree centigrade. $\frac{R2 - R1}{R1(t2-t1)} * 10^6$ (PPM/℃)
Short-Time Over load	(WV) =√WR ON5secs Requirement:(2.0%±0.1Ω)	JIS C 5202.....clause 5.5 Permanent resistance change after the application of a potential of 2.5 time RCWV. Or the max. Over load voltage respectively specified in the above list, whichever less for 5 secs
Strength Bending	Y/X=5/ FOR 10secs Requirement: (1.0%±0.05Ω)	JIS C 5202.....clause Bending Test : y/x=/ 1 time
Resistance to Soldering Heat	Test Temp: 260℃±5℃ For 10secs Requirement: (1.0%±0.05Ω)Max	JIS C 5202.....clause 6.4 Test temperature : 260±5℃ Dip time : 10 secs
Temp cycling	-55℃(30mins)→+25℃(10~15mins) +125℃(30mins)→+25℃(10~15mins)5cycles Requirement:±(1.0%±0.05Ω)Max	JIS C 5202.....clause 7.4 Resistance change after continuous five cycles for duty cycle specified below
Humidity (stead state)	Temp:40℃±2℃ R.H:90~95% Continuors 1000hrs Requirement:±(3.0%±0.1Ω)Max	JIS C 5202.....clause 7.5 Temporary resistance change after 1000hours exercise in a humidity test chamber controlled at 40±2℃ and 90% to 95% relative humidity.
Loading Life in Moisture	Temp: 40℃±2℃ R.H:90~95% (WV) =√WR on-1.5hrs OFF+0.5hrs Continuors 1000hrs Requirement:±(3.0%±0.1Ω)Max	JIS C 5202.....clause 7.9 Resistance change after 1000hours (1.5h "on"0.5h"off")at RCWV or max. less in a humidity chamber controlled at 40±2℃ and 90%to95% relative humidity.
Load Life	Temp: 70℃±2℃ (WV) =√WR Continuors 1000hrs ON-1.5hrs OFF-0.5hr Requirement:±(3.0%±0.1Ω)Max	JIS C 5202.....clause 7.10 Resistance change after 1000hours operating at RCWV or msx. RCWV,which less with duty cycle of 1.5h "on"at70±2℃ ambient

PARTS NUMBER SYSTEM

0603	**1002**	**F**	**R**
Size	Rrsistance Value	Tolerance	Standard Packing
0402 0603 0805 1206 1210 2010 2512	Please refer to marking explanation. 000=jumper 0 ohm	F=±1% J=±5% B=±0.1%	R=Paper tape reel K=Embossed plastic tape reel B=Bulk bag Please refer to packaging explanation

5% marking Value 10KΩ

0603
0805
1206
1210
2010
2512

1% marking Value -10KΩ

0805
1206
1210
2010
2512

1% marking Value –12.4KΩ

0603
EIA-96
marking

NO marking

0402

MARKING EXPLANATION

1. 5%tolerance:3digits,first two digits are significant figures,third digit is number of zeros.
.Letter R is decimal point.
2. 5%tolerance:3digits,first two digits are significant figures,Letter R is decimal point.
3. 0603 1%:EIA-96 marking
4. 0402 no marking

勝 特 力 材 料 886-3-5753170
胜特力电子(上海) 86-21-54151736
胜特力电子(深圳) 86-755-83298787
Http://www.100y.com.tw

勝 特 力 材 料 886-3-5753170
胜特力电子(上海) 86-21-54151736
胜特力电子(深圳) 86-755-83298787
Http://www.100y.com.tw

THICK FILM LOW OHM CHIP RESISTORS

Features

- Most suitable as resistor for current detection in power source circuits, motor circuits. etc
- Type 0402/0603/0805/1206/1210/2010/2512

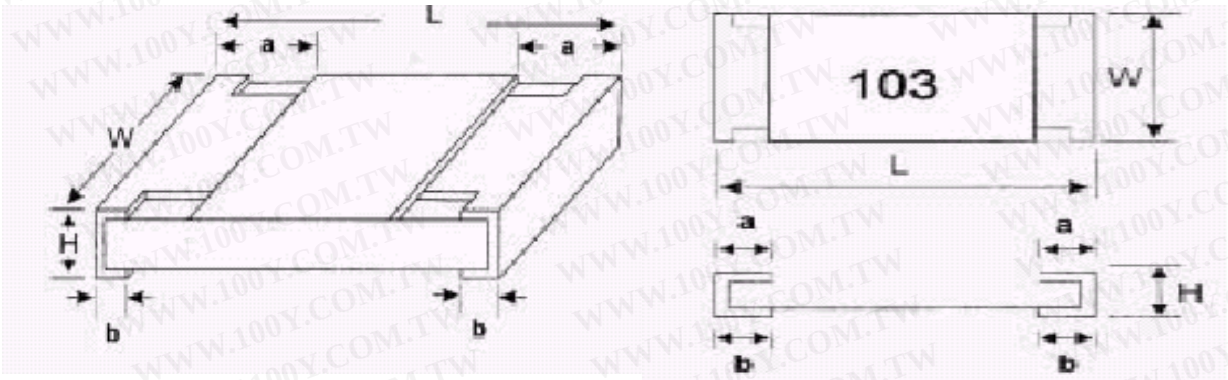

Unit : mm

Type	L	W	H	a	b
0402	1.00±0.10	0.50±0.05	0.30±0.05	0.20±0.10	0.20±0.10
0603	1.60±0.20	0.80±0.15	0.40±0.10	0.30±0.20	0.30±0.15
0805	2.00±0.20	1.25±0.15	0.50±0.15	0.35±0.15	0.35±0.15
1206	3.20±0.20	1.60±0.20	0.55±0.15	0.45±0.20	0.45±0.20
1210	3.20±0.20	2.50±0.20	0.55±0.15	0.50±0.20	0.50±0.20
2010	5.00±0.20	2.50±0.20	0.55±0.10	0.60±0.20	0.60±0.20
2512	6.30±0.20	3.20±0.20	0.55±0.10	0.60±0.20	0.60±0.20

■Ratings

TYPE	Power Ratung at 70℃	Pate Current Voltage(Vr)	Max Working Voltage(Vw)	Max Over Load Voltage(Vo)	TCR (ppm/℃)	Resistance Tolerance(%)	Resistance Range(Ω)	Operating Temperature(℃)
0402	0.0625W	0.13V~0.86V	0.43V	0.86V	±800	±1%	0.1~0.99	-55℃~+125℃
					±1500	±5%	0.1~0.99	
0603	0.1W	0.17V~1.09V	0.54V	1.08V	±800	±1%	0.01~0.99	-55℃~+125℃
					±1500	±5%	0.01~0.99	
0805	0.125W	0.19V~1.22V	0.61V	1.22V	±800	±1%	0.01~0.99	-55℃~+125℃
					±1500	±5%	0.01~0.99	
1206	0.25W	0.27V~1.74V	0.87V	1.74V	±800	±1%	0.01~0.99	-55℃~+125℃
					±1500	±5%	0.01~0.99	
1210	0.33W	0.31V~1.98V	0.99V	1.98V	±800	±1%	0.01~0.99	-55℃~+125℃
					±1500	±5%	0.01~0.99	
2010	0.5W	0.38V~2.44V	1.22V	2.44V	±800	±1%	0.01~0.99	-55℃~+125℃
					±1500	±5%	0.01~0.99	
2512	1.0W	0.54V~3.46V	1.73V	3.46V	±800	±1%	0.01~0.99	-55℃~+125℃
					±1500	±5%	0.01~0.99	

■Rated Resistance

Resistance	Code	Resistance	Code	Resistance	Code	Resistance	Code	Resistance	Code
10mΩ	R010	65mΩ	R065	0.12Ω	R120	0.27Ω	R270	0.56Ω	R560
15mΩ	R015	68mΩ	R068	0.13Ω	R130	0.30Ω	R300	0.60Ω	R600
20mΩ	R020	70mΩ	R070	0.15Ω	R150	0.33Ω	R330	0.65Ω	R650
30mΩ	R030	75mΩ	R075	0.16Ω	R160	0.36Ω	R360	0.68Ω	R680
40mΩ	R040	80mΩ	R080	0.18Ω	R180	0.40Ω	R400	0.70Ω	R700
50mΩ	R050	90mΩ	R090	0.20Ω	R200	0.43Ω	R430	0.75Ω	R750
56mΩ	R056	0.10Ω	R100	0.22Ω	R220	0.47Ω	R470	0.80Ω	R800
60mΩ	R060	0.11Ω	R110	0.25Ω	R250	0.50Ω	R500	0.90Ω	R900

勝 特 力 材 料 886-3-5753170
胜特力电子(上海) 86-21-54151736
胜特力电子(深圳) 86-755-83298787
Http://www.100y.com.tw

THICK FILM HIGH OHM CHIP RESISTORS

Features

- Designed for use in compact instrumentation i.e.pyroelectric sensor etc.
- Type 0402/0603/0805/1206/1210/2010/2512

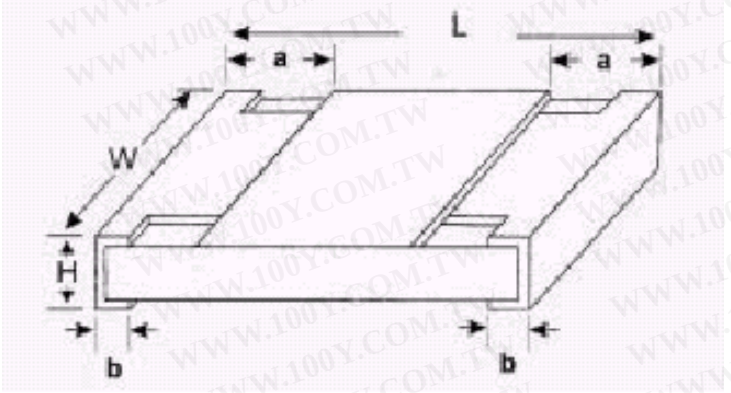

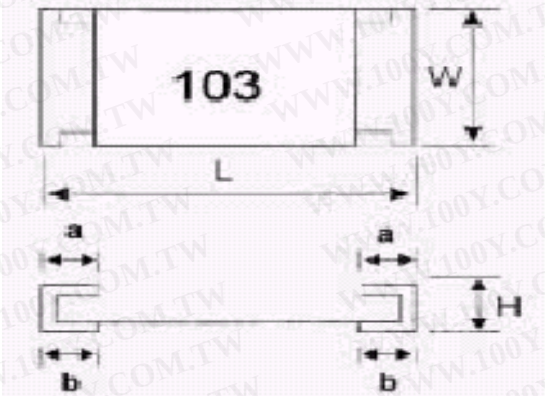

Unit : mm

Type	L	W	H	a	b
0402	1.00±0.10	0.50±0.05	0.30±0.05	0.20±0.10	0.20±0.10
0603	1.60±0.20	0.80±0.15	0.40±0.10	0.30±0.20	0.30±0.15
0805	2.00±0.20	1.25±0.15	0.50±0.15	0.35±0.15	0.35±0.15
1206	3.20±0.20	1.60±0.20	0.60±0.15	0.45±0.20	0.45±0.20
1210	3.20±0.20	2.50±0.20	0.55±0.15	0.50±0.20	0.50±0.20
2010	5.00±0.20	2.50±0.20	0.55±0.10	0.60±0.20	0.60±0.20
2512	6.30±0.20	3.20±0.20	0.55±0.10	0.60±0.20	0.60±0.20

RATINGS

TYPE	Power Ratung at 70℃	Max. Working Voltage(Vw)	Max. Over Load Voltage(Vo)	TCR (ppm/℃)	Resistance Toerance(%)	Resistance Range(Ω)	Operating Temperature(℃)
0402	0.0625W	50V	100V	±200	±1%	10.1M~54M	-55℃~+125℃
					±5%	10.1M~100M	
					±10%	10.1M~100M	
0603	0.1W	50V	100V	±200	±1%	10.1M~54M	-55℃~+125℃
					±5%	10.1M~100M	
					±10%	10.1M~100M	
0805	0.125W	150V	300V	±200	±1%	10.1M~54M	-55℃~+125℃
					±5%	10.1M~100M	
					±10%	10.1M~100M	
1206	0.25W	200V	400V	±200	±1%	10.1M~54M	-55℃~+125℃
					±5%	10.1M~100M	
					±10%	10.1M~100M	
1210	0.33W	200V	400V	±200	±1%	10.1M~54M	-55℃~+125℃
					±5%	10.1M~100M	
					±10%	10.1M~100M	
2010	0.5W	200V	400V	±200	±1%	10.1M~54M	-55℃~+125℃
					±5%	10.1M~100M	
					±10%	10.1M~100M	
2512	1.0W	200V	400V	±200	±1%	10.1M~54M	-55℃~+125℃
					±5%	10.1M~100M	
					±10%	10.1M~100M	

勝 特 力 材 料 886-3-5753170
胜特力电子(上海) 86-21-54151736
胜特力电子(深圳) 86-755-83298787
Http://www.100y.com.tw

PACKING

REEL DIMENSION (mm)

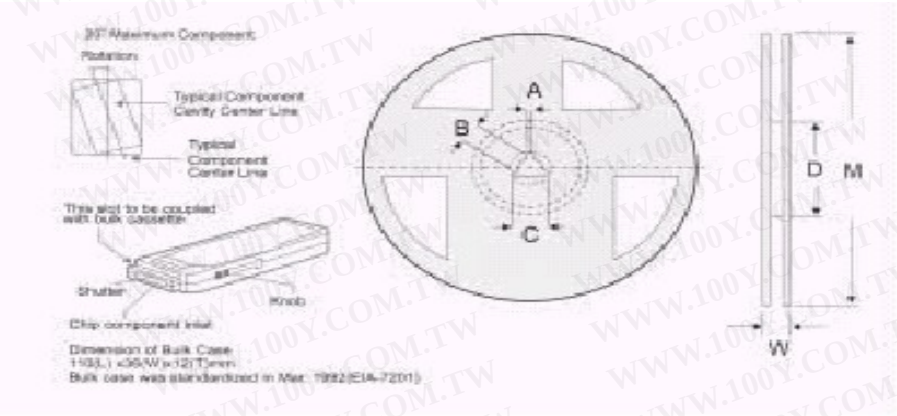

Unit : mm

TYPE	SIZE		A	B	C	D	W	M
0201	7"	10K/Reel	2.0±0.5	13.5±2.0	21±0.5	60±0.5	12.5±2.0	178±2.0
0402	7"	10K/Reel	2.0±0.5	13.5±2.0	21±0.5	60±0.5	12.5±2.0	178±2.0
0603	7"	5K/Reel	2.0±0.5	13.5±2.0	21±0.5	60±0.5	12.5±2.0	254±2.0
0805	10"	10K/Reel	2.0±0.5	13.5±2.0	21±0.5	80±0.5	12.5±2.0	330±2.0
1206	13"	20K/Reel	2.0±0.5	13.5±2.0	21±0.5	80±0.5	12.5±2.0	178±2.0
1210	7"	5K/Reel	2.0±0.5	13.5±2.0	21±0.5	60±0.5	12.5±2.0	178±2.0
2010	7"	4K/Reel	2.0±0.5	13.5±2.0	21±0.5	60±0.5	16.0±2.0	178±2.0
2512	7"	4K/Reel	2.0±0.5	13.5±2.0	21±0.5	60±0.5	16.0±2.0	178±2.0

☐ TAPING SPECIFICATION

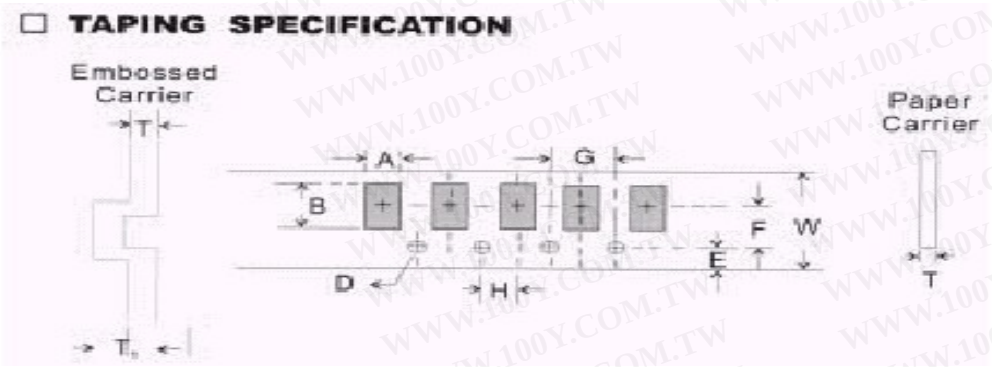

Unit : mm

PACKING	SIZE	A	B	W	E	F	G	H	T	D
Paper Type	0201	0.45±0.1	0.75±0.1	8.0±0.2	1.75±0.1	3.5±0.05	4.0±0.1	2.0±0.05	0.35±0.1	1.5±0.10
	0402	0.7±0.1	1.20±0.1	8.0±0.2	1.75±0.1	3.5±0.05	4.0±0.1	2.0±0.05	0.45±0.1	1.5±0.10
	0603	1.05±0.2	1.80±0.2	8.0±0.2	1.75±0.1	3.5±0.05	4.0±0.1	2.0±0.05	0.60±0.1	1.5±0.10
	0805	1.55±0.2	2.30±0.2	8.0±0.2	1.75±0.1	3.5±0.05	4.0±0.1	2.0±0.05	0.75±0.1	1.5±0.10
	1206	1.90±0.2	3.50±0.2	8.0±0.2	1.75±0.1	3.5±0.05	4.0±0.1	2.0±0.05	0.75±0.1	1.5±0.10
	1210	2.85±0.2	3.50±0.2	8.0±0.2	1.75±0.1	3.5±0.05	4.0±0.1	2.0±0.05	0.75±0.1	1.5±0.10