DATA SHEET

勝 特 力 材 料 886-3-5753170
胜特力电子(上海) 86-21-54151736
胜特力电子(深圳) 86-755-83298787
Http://www.100y.com.tw

SCC2681

Dual asynchronous receiver/transmitter (DUART)

Product data

2004 Apr 06

Philips
Semiconductors

PHILIPS

Dual asynchronous receiver/transmitter (DUART) SCC2681

DESCRIPTION

The Philips Semiconductors SCC2681 Dual Universal Asynchronous Receiver/Transmitter (DUART) is a single-chip MOS-LSI communications device that provides two independent full-duplex asynchronous receiver/transmitter channels in a single package. It interfaces directly with microprocessors and may be used in a polled or interrupt driven system. It is manufactured in a CMOS process.

The operating mode and data format of each channel can be programmed independently. Additionally, each receiver and transmitter can select its operating speed as one of eighteen fixed baud rates, a 16× clock derived from a programmable counter/timer, or an external 1× or 16× clock. The baud rate generator and counter/timer can operate directly from a crystal or from external clock inputs. The ability to independently program the operating speed of the receiver and transmitter make the DUART particularly attractive for dual-speed channel applications such as clustered terminal systems.

Each receiver is quadruply buffered to minimize the potential of receiver over-run or to reduce interrupt overhead in interrupt driven systems. In addition, a flow control capability is provided to disable a remote DUART transmitter when the buffer of the receiving device is full.

Also provided on the SCC2681 are a multipurpose 7-bit input port and a multipurpose 8-bit output port. These can be used as general purpose I/O ports or can be assigned specific functions (such as clock inputs or status/interrupt outputs) under program control.

The SCC2681 is available in three package versions: 40-pin and 28-pin DIPs (both 0.6” wide); and a 44-pin PLCC.

FEATURES

- Dual full-duplex asynchronous receiver/transmitter
- Quadruple buffered receiver data registers
- Programmable data format
  - 5 to 8 data bits plus parity
  - Odd, even, no parity or force parity
  - 1, 1.5 or 2 stop bits programmable in 1/16-bit increments
- Programmable baud rate for each receiver and transmitter selectable from:
  - 22 fixed rates: 50 to 115.2 k baud
- 16-bit programmable Counter/Timer
  - Non-standard rates to 115.2 kb
  - One user-defined rate derived from programmable timer/counter
  - External 1× or 16× clock
- Parity, framing, and overrun error detection
- False start bit detection
- Line break detection and generation
- Programmable channel mode
  - Normal (full-duplex)
  - Automatic echo
  - Local loopback
  - Remote loopback
- Multi-function programmable 16-bit counter/timer
- Multi-function 7-bit input port
  - Can serve as clock or control inputs
  - Change of state detection on four inputs
  - 100 kΩ typical pull-up resistor
- Multi-function 8-bit output port
  - Individual bit set/reset capability
  - Outputs can be programmed to be status/interrupt signals
  - DMA signals
  - Auto 485 turn-around
- Versatile interrupt system
  - Single interrupt output with eight maskable interrupting conditions
  - Output port can be configured to provide a total of up to six separate wire-ORable interrupt outputs
- Maximum data transfer: 1× – 1 MB/sec; 16× – 125 kB/sec
- Automatic wake-up mode for multidrop applications
- Start-end break interrupt/status
- Detects break which originates in the middle of a character
- On-chip crystal oscillator
- Single +5 V power supply
- Commercial and industrial temperature ranges available
- DIP and PLCC packages

勝 特 力 材 料 886-3-5753170
胜特力电子(上海) 86-21-54151736
胜特力电子(深圳) 86-755-83298787
Http://www.100y.com.tw

ORDERING INFORMATION

Type number	Package		
	Name	Description	Version
Commercial; V_{CC} = +5 V ± 5%; T_{amb} = 0 °C to +70 °C			
SCC2681AC1A44	PLCC44	plastic leaded chip carrier; 44 leads	SOT187-2
SCC2681AC1N28	DIP28	plastic dual in-line package; 28 leads (600 mil)	SOT117-1
SCC2681AC1N40	DIP40	plastic dual in-line package; 40 leads (600 mil)	SOT129-1
Industrial; V_{CC} = +5 V ± 10%; T_{amb} = –40 °C to +85 °C			
SCC2681AE1A44	PLCC44	plastic leaded chip carrier; 44 leads	SOT187-2
SCC2681AE1N28	DIP28	plastic dual in-line package; 28 leads (600 mil)	SOT117-1
SCC2681AE1N40	DIP40	plastic dual in-line package; 40 leads (600 mil)	SOT129-1

勝 特 力 材 料 886-3-5753170
胜特力电子(上海) 86-21-54151736
胜特力电子(深圳) 86-755-83298787
Http://www.100y.com.tw

PIN CONFIGURATIONS

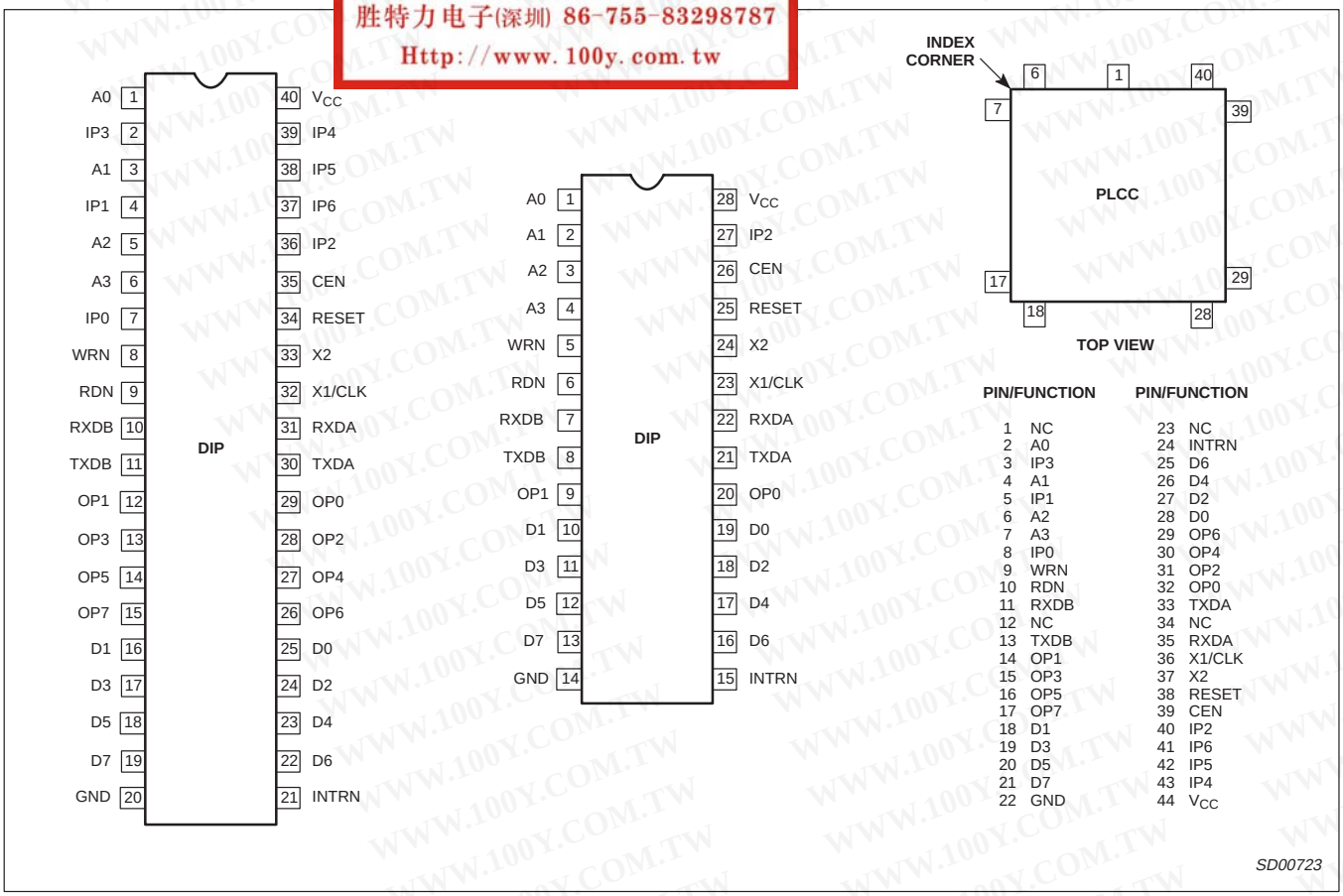

Figure 1. Pin configurations

PIN DESCRIPTION

SYMBOL	PIN			TYPE	NAME AND FUNCTION
	PLCC44	DIP40	DIP28		
D0–D7	28, 18, 27, 19, 26, 20, 25, 21	25, 16, 24, 17, 23, 18, 22, 19	19, 10, 18, 11, 17, 12, 16, 13	I/O	**Data Bus:** Bidirectional 3-State data bus used to transfer commands, data and status between the DUART and the CPU. D0 is the least significant bit.
CEN	39	35	26	I	**Chip Enable:** Active-LOW input signal. When LOW, data transfers between the CPU and the DUART are enabled on D0-D7 as controlled by the WRN, RDN and A0-A3 inputs. When HIGH, places the D0-D7 lines in the 3-State condition.
WRN	9	8	5	I	**Write Strobe:** When LOW and CEN is also LOW, the contents of the data bus is loaded into the addressed register. The transfer occurs on the rising edge of the signal.
RDN	10	9	6	I	**Read Strobe:** When LOW and CEN is also LOW, causes the contents of the addressed register to be presented on the data bus. The read cycle begins on the falling edge of RDN.
A0–A3	2, 4, 6, 7	1, 3, 5, 6	1–4	I	**Address Inputs:** Select the DUART internal registers and ports for read/write operations.
RESET	38	34	25	I	**Reset:** A HIGH level clears internal registers (SRA, SRB, IMR, ISR, OPR, OPCR), puts OP0–OP7 in the HIGH state, stops the counter/timer, and puts Channels A and B in the inactive state, with the TxDA and TxDB outputs in the mark (HIGH) state. Clears Test modes, sets MR pointer to MR1.
INTRN	24	21	15	O	**Interrupt Request:** Active-LOW, open-drain, output which signals the CPU that one or more of the eight maskable interrupting conditions are true.
X1/CLK	36	32	23	I	**Crystal 1:** Crystal connection or an external clock input. A crystal of a clock the appropriate frequency (nominally 3.6864 MHz) must be supplied at all times. For crystal connections see Figure 7, Clock Timing.

SYMBOL	PIN			TYPE	NAME AND FUNCTION
	PLCC44	DIP40	DIP28		
X2	37	33	24	I	**Crystal 2:** Crystal connection. See Figure 7. If a crystal is not used it is best to keep this pin not connected although it **must not be** grounded.
RxDA	35	31	22	I	**Channel A Receiver Serial Data Input:** The least significant bit is received first. “Mark” is HIGH, “space” is LOW.
RxDB	11	10	7	I	**Channel B Receive Serial Data Input:** The least significant bit is received first. “Mark” is HIGH, “space” is LOW.
TxDA	33	30	21	O	**Channel A Transmitter Serial Data Output:** The least significant bit is transmitted first. This output is held in the “mark” condition when the transmitter is disabled, idle or when operating in local loopback mode. “Mark” is HIGH, “space” is LOW.
TxDB	13	11	8	O	**Channel B Transmitter Serial Data Output:** The least significant bit is transmitted first. This output is held in the “mark” condition when the transmitter is disabled, idle or when operating in local loopback mode. “Mark” is HIGH, “space” is LOW.
OP0	32	29	20	O	**Output 0:** General purpose output or Channel A request to send (RTSAN, active-LOW). Can be deactivated automatically on receive or transmit.
OP1	14	12	9	O	**Output 1:** General purpose output or Channel B request to send (RTSBN, active-LOW). Can be deactivated automatically on receive or transmit.
OP2	31	28	–	O	**Output 2:** General purpose output or Channel A transmitter 1× or 16× clock output, or Channel A receiver 1× clock output.
OP3	15	13	–	O	**Output 3:** General purpose output or open-drain, active-LOW counter/timer interrupt output or Channel B transmitter 1× clock output, or Channel B receiver 1× clock output.
OP4	30	27	–	O	**Output 4:** General purpose output or Channel A open-drain, active-LOW, RxRDYA/FFULLA interrupt output.
OP5	16	14	–	O	**Output 5:** General purpose output or Channel B open-drain, active-LOW, RxRDYB/FFULLB interrupt output.
OP6	29	26	–	O	**Output 6:** General purpose output or Channel A open-drain, active-LOW, TxRDYA interrupt output.
OP7	17	15	–	O	**Output 7:** General purpose output or Channel B open-drain, active-LOW, TxRDYB interrupt output.
IP0	8	7	–	I	**Input 0:** General purpose input or Channel A clear to send active-LOW input (CTSAN). Pin has an internal V_{CC} pull-up device supplying 1 to 4 μA of current.
IP1	5	4	–	I	**Input 1:** General purpose input or Channel B clear to send active-LOW input (CTSBN). Pin has an internal V_{CC} pull-up device supplying 1 to 4 μA of current.
IP2	40	36	27	I	**Input 2:** General purpose input or counter/timer external clock input. Pin has an internal V_{CC} pull-up device supplying 1 to 4 μA of current.
IP3	3	2	–	I	**Input 3:** General purpose input or Channel A transmitter external clock input (TxCA). When the external clock is used by the transmitter, the transmitted data is clocked on the falling edge of the clock. Pin has an internal V_{CC} pull-up device supplying 1 to 4 μA of current.
IP4	43	39	–	I	**Input 4:** General purpose input or Channel A receiver external clock input (RxCA). When the external clock is used by the receiver, the received data is sampled on the rising edge of the clock. Pin has an internal V_{CC} pull-up device supplying 1 to 4 μA of current.
IP5	42	38	–	I	**Input 5:** General purpose input or Channel B transmitter external clock input (TxCB). When the external clock is used by the transmitter, the transmitted data is clocked on the falling edge of the clock. Pin has an internal V_{CC} pull-up device supplying 1 to 4 μA of current.
IP6	41	37	–	I	**Input 6:** General purpose input or Channel B receiver external clock input (RxCB). When the external clock is used by the receiver, the received data is sampled on the rising edge of the clock. Pin has an internal V_{CC} pull-up device supplying 1 to 4 μA of current.
V_{CC}	44	40	28	I	**Power Supply:** +5V supply input.
GND	22	20	14	I	**Ground**
n.c.	1, 12, 34, 23	–	–	–	**Not connected.**

勝 特 力 材 料 886-3-5753170
胜特力电子(上海) 86-21-54151736
胜特力电子(深圳) 86-755-83298787
Http://www.100y.com.tw

ABSOLUTE MAXIMUM RATINGS[1]

SYMBOL	PARAMETER	RATING	UNIT
T_{amb}	Operating ambient temperature range[2]	See Note 4	°C
T_{stg}	Storage temperature range	–65 to +150	°C
	All voltages with respect to ground[3]	–0.5 to +6.0	V
	Pin voltage range	V_{SS} – 0.5 V to V_{CC} + 0.5 V	V

NOTES:
1. Stresses above those listed under Absolute Maximum Ratings may cause permanent damage to the device. This is a stress rating only and functional operation of the device at these or any other condition above those indicated in the operation section of this specification is not implied.
2. For operating at elevated temperatures, the device must be derated based on +150 °C maximum junction temperature.
3. This product includes circuitry specifically designed for the protection of its internal devices from damaging effects of excessive static charge. Nonetheless, it is suggested that conventional precautions be taken to avoid applying any voltages larger than the rated maxima.
4. Parameters are valid over specified temperature range. See Ordering information table for applicable operating temperature range and V_{CC} supply range.

DC ELECTRICAL CHARACTERISTICS[1, 2, 3]

T_{amb} = –40 °C to +85 °C; V_{CC} = +5.0 V ± 10%

SYMBOL	PARAMETER	TEST CONDITIONS	LIMITS			UNIT
			Min	Typ	Max	
V_{IL}	LOW-level input voltage		–	–	0.8	V
V_{IH}	HIGH-level input voltage (except X1/CLK)	$T_{amb} \geq 0$ °C	2.0	–	–	V
V_{IH}	HIGH-level input voltage (except X1/CLK)	$T_{amb} < 0$ °C	2.5	–	–	V
V_{IH}	HIGH-level input voltage (X1/CLK)		0.8 V_{CC}	–	–	V
V_{OL}	LOW-level output voltage	I_{OL} = 2.4 mA	–	–	0.4	V
V_{OH}	HIGH-level output voltage (except open-drain outputs)[4]	I_{OH} = –400 µA	V_{CC} – 0.5	–	–	V
I_{IX1}	X1/CLK input current	V_{IN} = 0 V to V_{CC}	–10	–	+10	µA
I_{ILX1}	X1/CLK input LOW current – operating	V_{IN} = 0 V	–75	–	0	µA
I_{IHX1}	X1/CLK input HIGH current – operating	V_{IN} = V_{CC}	0	–	75	µA
I_{OHX2}	X2 output HIGH current – operating	V_{OUT} = V_{CC}; X1 = 0	0	–	+75	µA
I_{OHX2S}	X2 output HIGH short circuit current – operating	V_{OUT} = 0 V; X1 = 0	–10	–	–1	mA
I_{OLX2}	X2 output LOW current – operating	V_{OUT} = 0 V; X1 = V_{CC}	–75	–	0	µA
I_{OLX2S}	X2 output LOW short circuit current – operating	V_{OUT} = V_{CC}; X1 = V_{CC}	1	–	10	mA
I_I	Input leakage current:					
	All except input port pins	V_{IN} = 0 V to V_{CC}	–10	–	+10	µA
	Input port pins	V_{IN} = 0 V to V_{CC}	–20	–	+10	µA
I_{OZH}	Output off current HIGH, 3-state data bus	V_{IN} = V_{CC}	–	–	10	µA
I_{OZL}	Output off current LOW, 3-state data bus	V_{IN} = 0 V	–10	–	–	µA
I_{ODL}	Open-drain output LOW current in off-state	V_{IN} = 0 V	–10	–	–	µA
I_{ODH}	Open-drain output HIGH current in off-state	V_{IN} = V_{CC}	–	–	10	µA
I_{CC}	Power supply current[5]					
	Operating mode	CMOS input levels	–	–	10	mA

NOTES:
1. Parameters are valid over specified temperature range.
2. All voltage measurements are referenced to ground (GND). For testing, all inputs swing between 0.4 V and 2.4 V with a transition time of 5 ns maximum. For X1/CLK this swing is between 0.4 V and 4.4 V. All time measurements are referenced at input voltages of 0.8 V and 2.0 V and output voltages of 0.8 V and 2.0 V, as appropriate.
3. Typical values are at +25 °C, typical supply voltages, and typical processing parameters.
4. Test conditions for outputs: C_L = 150 pF, except interrupt outputs. Test conditions for interrupt outputs: C_L = 50 pF, R_L = 2.7 kΩ to V_{CC}.
5. All outputs are disconnected. Inputs are switching between CMOS levels of V_{CC} – 0.2 V and V_{SS} + 0.2 V.

勝 特 力 材 料 886-3-5753170
胜特力电子(上海) 86-21-54151736
胜特力电子(深圳) 86-755-83298787
Http://www.100y.com.tw

AC CHARACTERISTICS

T_{amb} = –40 °C to +85 °C[1]; V_{CC} = +5.0 V ± 10% [2, 3, 4, 5]

SYMBOL	PARAMETER	LIMITS			UNIT
		Min	Typ	Max	
Reset Timing (Figure 3)					
t_{RES}	RESET pulse width	200	–	–	ns
Bus Timing (Figure 4)[6]					
t_{AS}	A0-A3 set-up time to RDN, WRN LOW	10	–	–	ns
t_{AH}	A0-A3 hold time from RDN, WRN LOW	100	–	–	ns
t_{CS}	CEN set-up time to RDN, WRN LOW	0	–	–	ns
t_{CH}	CEN hold time from RDN, WRN HIGH	0	–	–	ns
t_{RW}	WRN, RDN pulse width	225	–	–	ns
t_{DD}	Data valid after RDN LOW	–	–	175	ns
t_{DF}	Data bus floating after RDN HIGH	–	–	100	ns
t_{DS}	Data set-up time before WRN HIGH	100	–	–	ns
t_{DH}	Data hold time after WRN HIGH	20	–	–	ns
t_{RWD}	HIGH time between READs and/or WRITE[7, 8]	200	–	–	ns
Port Timing (Figure 5)[6]					
t_{PS}	Port input set-up time before RDN LOW	0	–	–	ns
t_{PH}	Port input hold time after RDN HIGH	0	–	–	ns
t_{PD}	Port output valid after WRN HIGH	–	–	400	ns
Interrupt Timing (Figure 6)					
t_{IR}	INTRN (or OP3-OP7 when used as interrupts) negated from:				
	Read RHR (RxRDY/FFULL interrupt)	–	–	300	ns
	Write THR (TxRDY interrupt)	–	–	300	ns
	Reset command (delta break interrupt)	–	–	300	ns
	Stop C/T command (counter interrupt)	–	–	300	ns
	Read IPCR (input port change interrupt)	–	–	300	ns
	Write IMR (clear of interrupt mask bit)	–	–	300	ns
Clock Timing (Figure 7)[10]					
t_{CLK}	X1/CLK HIGH or LOW time	100	–	–	ns
f_{CLK}	X1/CLK frequency	1.0	3.6864	4.0	MHz
t_{CTC}	CTCLK (IP2) HIGH or LOW time	100	–	–	ns
f_{CTC}	CTCLK (IP2) frequency	0	–	4.0	MHz
t_{RX}[9]	RxC HIGH or LOW time	220	–	–	ns
f_{RX}[9]	RxC frequency (16×)	0	–	2.0	MHz
	(1×)	0	–	1.0	MHz
t_{TX}[9]	TxC HIGH or LOW time	220	–	–	ns
f_{TX}[9]	TxC frequency (16×)	0	–	2.0	MHz
	(1×)	0	–	1.0	MHz
Transmitter Timing (Figure 8)					
t_{TXD}[9]	TxD output delay from TxC external clock input on IP pin	–	–	350	ns
t_{TCS}[9]	Output delay from TxC LOW at OP pin to TxD data output	0	–	150	ns
Receiver Timing (Figure 10)					
t_{RXS}[9]	RxD data setup time before RxC HIGH at external clock input on IP pin	240	–	–	ns
t_{RXH}[9]	RxD data hold time after RxC HIGH at external clock input on IP pin	200	–	–	ns

勝 特 力 材 料 886-3-5753170
胜特力电子(上海) 86-21-54151736
胜特力电子(深圳) 86-755-83298787
Http://www.100y.com.tw

NOTES:

1. For operating at elevated temperatures, the device must be derated based on +150 °C maximum junction temperature.
2. Parameters are valid over specified temperature range.
3. All voltage measurements are referenced to ground (GND). For testing, all inputs except X1/CLK swing between 0.4 V and 2.4 V with a transition time of ≤ 20 ns. For X1/CLK this swing is between 0.4 V and 4.4 V. All time measurements are referenced at input voltages of 0.8 V and 2.0 V as appropriate.
4. Typical values are at +25 °C, typical supply voltages, and typical processing parameters.
5. Test condition for outputs: C_L = 150 pF, except interrupt outputs. Test condition for interrupt outputs: C_L = 50 pF, R_L = 2.7 kΩ to V_{CC}.
6. Timing is illustrated and referenced to the WRN and RDN inputs. The device may also be operated with CEN as the ‘strobing’ input. In this case, all timing specifications apply referenced to the falling and rising edges of CEN, CEN and RDN (also CEN and WRN) are ANDed internally. As a consequence, the signal asserted last initiates the cycle and the signal negated first terminates the cycle.
7. If CEN is used as the ‘strobing’ input, the parameter defines the minimum HIGH times between one CEN and the next. The RDN signal must be negated for t_{RWD} to guarantee that any status register changes are valid.

8. Consecutive write operations to the same command register require at least three edges of the X1 clock between writes.
9. This parameter is not applicable to the 28-pin device.
10. Operation to 0 MHz is assured by design. However, operation at low frequencies is not tested and has not been characterized.

BLOCK DIAGRAM

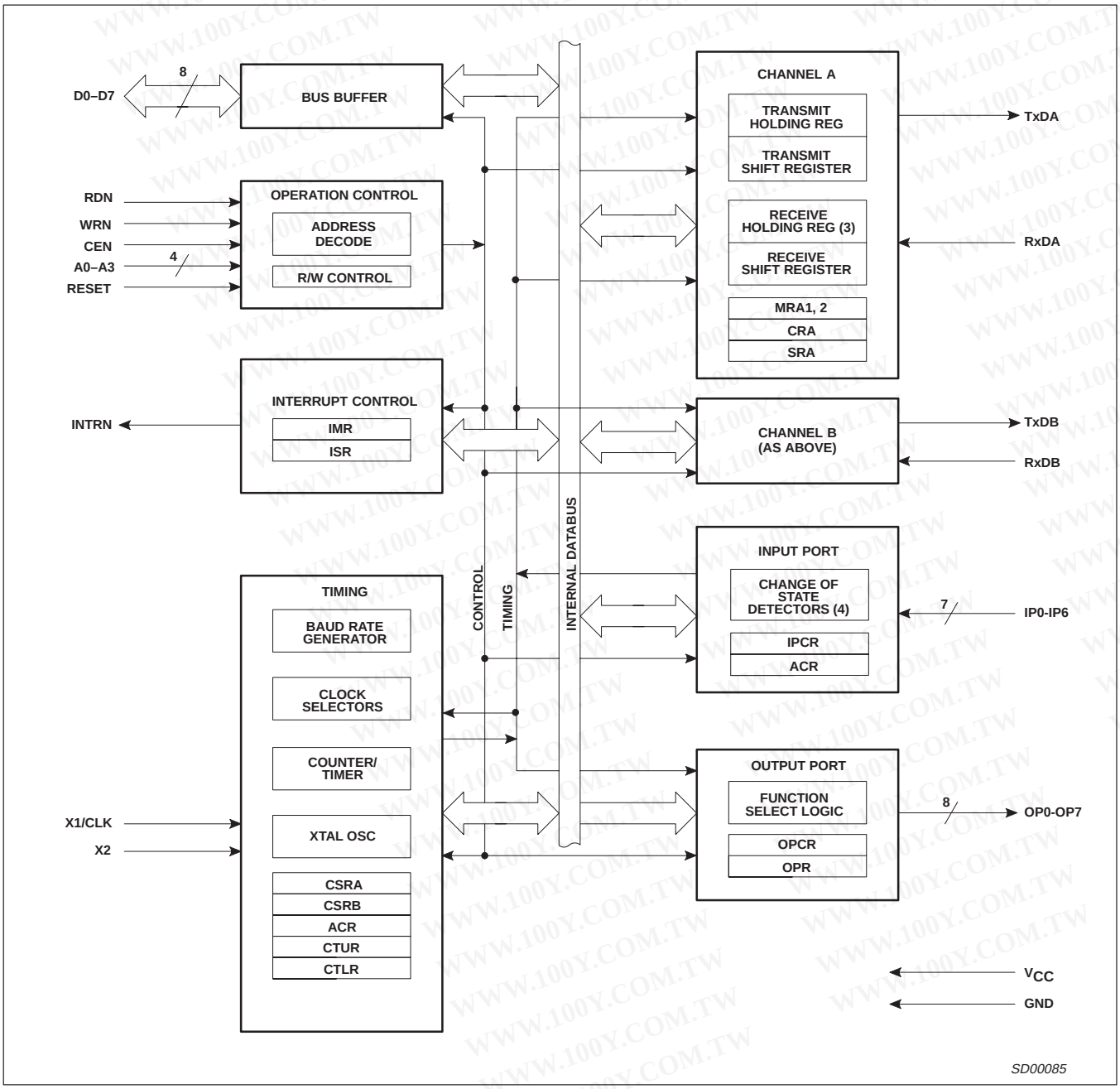

Figure 2. Block Diagram

勝 特 力 材 料 886-3-5753170
胜特力电子(上海) 86-21-54151736
胜特力电子(深圳) 86-755-83298787
Http://www.100y.com.tw

BLOCK DIAGRAM

The SCC2681 DUART consists of the following eight major sections: data bus buffer, operation control, interrupt control, timing, communications Channels A and B, input port and output port. Refer to the block diagram.

Data Bus Buffer

The data bus buffer provides the interface between the external and internal data buses. It is controlled by the operation control block to allow read and write operations to take place between the controlling CPU and the DUART.

Operation Control

The operation control logic receives operation commands from the CPU and generates appropriate signals to internal sections to control device operation. It contains address decoding and read and write circuits to permit communications with the microprocessor via the data bus buffer.

Interrupt Control

A single active-LOW interrupt output (INTRN) is provided which is activated upon the occurrence of any of eight internal events. Associated with the interrupt system are the Interrupt Mask Register (IMR) and the Interrupt Status Register (ISR). The IMR may be programmed to select only certain conditions to cause INTRN to be asserted. The ISR can be read by the CPU to determine all currently active interrupting conditions.

Specific Change of State (COS) bits interrupts are controlled in the ACR and IPCR registers. The ISR indicates a COS has occurred, but not the particular pins causing the interrupt.

Outputs OP3-OP7 can be programmed to provide discrete interrupt outputs for the transmitter, receivers, and counter/timer. The OP pins associated with the receiver and transmitter may be used for DMA interface.

Timing Circuits

The timing block consists of a crystal oscillator, a baud rate generator, a programmable 16-bit counter/timer, and four clock selectors. The crystal oscillator operates directly from a 3.6864MHz crystal connected across the X1/CLK and X2 inputs. If an external clock of the appropriate frequency is available, it may be connected to X1/CLK. The clock serves as the basic timing reference for the Baud Rate Generator (BRG), the counter/timer, and other internal circuits. A clock signal within the limits specified in the specifications section of this data sheet must always be supplied to the DUART.

If an external clock is used instead of a crystal, both X1 and X2 should use a configuration similar to the one in Figure 7.

The baud rate generator operates from the oscillator or external clock input and is capable of generating 18 commonly used data communications baud rates ranging from 50 to 115.2 k baud. The clock outputs from the BRG are at 16× the actual baud rate. The counter/timer can be used as a timer to produce a 16× clock for any other baud rate by counting down the crystal clock or an external clock. The four clock selectors allow the independent selection, for each receiver and transmitter, of any of these baud rates or external timing signal.

勝 特 力 材 料 886-3-5753170
胜特力电子(上海) 86-21-54151736
胜特力电子(深圳) 86-755-83298787
Http://www.100y.com.tw

Counter/Timer (C/T)

The counter timer is a 16 bit programmable divider that operates one of three modes: Counter, Timer or Time Out mode. In all three modes it uses the 16-bit value loaded to the CTUR and CTLR registers. (Counter timer upper and lower preset registers).

- In the timer mode it generates a square wave.
- In the counter mode it generates a time delay.
- In the time out mode it monitors the receiver data flow and signals data flow has paused. In the time out mode the receiver controls the starting/stopping of the C/T.

The counter operates as a down counter and sets its output bit in the ISR (Interrupt Status Register) each time it passes through 0. The output of the counter/timer may be seen on one of the OP pins or as an Rx or Tx clock.

The Timer/Counter is controlled with six (6) “commands”; Start C/T, Stop C/T, write C/T, preset registers, read C/T value, set or reset time out mode.

Please see the detail of the commands under the Counter/Timer register descriptions.

Communications Channels A and B

Each communications channel of the SCC2681 comprises a full-duplex asynchronous receiver/transmitter (UART). The operating frequency for each receiver and transmitter can be selected independently from the baud rate generator, the counter timer, or from an external input.

The transmitter accepts parallel data from the CPU, converts it to a serial bit stream, inserts the appropriate start, stop, and optional parity bits and outputs a composite serial stream of data on the TxD output pin. The receiver accepts serial data on the RxD pin, converts this serial input to parallel format, checks for start bit, stop bit, parity bit (if any), or break condition and sends an assembled character to the CPU.

Input Port

The inputs to this unlatched 7-bit port can be read by the CPU by performing a read operation at address 0xD. A HIGH input results in a logic 1 while a LOW input results in a logic 0. D7 will always read as a logic 1. The pins of this port can also serve as auxiliary inputs to certain portions of the DUART logic.

Four change-of-state detectors are provided which are associated with inputs IP3, IP2, IP1 and IP0. A HIGH-to-LOW or LOW-to-HIGH transition of these inputs lasting longer than 25 – 50µs, will set the corresponding bit in the input port change register. The bits are cleared when the register is read by the CPU. Any change-of-state can also be programmed to generate an interrupt to the CPU.

All the IP pins have a small pull-up device that will source 1 to 4 µA of current from V_{CC}. These pins do not require pull-up devices or V_{CC} connections if they are not used.

The input port pulse detection circuitry uses a 38.4 kHz sampling clock derived from one of the baud rate generator taps. This results in a sampling period of slightly more than 25 µs (this assumes that the clock input is 3.6864 MHz). The detection circuitry, in order to guarantee that a true change in level has occurred, requires two successive samples at the new logic level be observed. As a consequence, the minimum duration of the signal change is 25 µs if the transition occurs “coincident with the first sample pulse”. The 50 µs time refers to the situation in which the change-of-state is “just missed” and the first change-of-state is not detected until 25 µs later.

勝 特 力 材 料 886-3-5753170
胜特力电子(上海) 86-21-54151736
胜特力电子(深圳) 86-755-83298787
Http://www.100y.com.tw

Output Port

The output port pins may be controlled by the OPR, OPCR, MR and CR registers. Via appropriate programming they may be just another parallel port to external circuits, or they may represent many internal conditions of the UART. When this 8-bit port is used as a general purpose output port, the output port pins drive a state which is the complement of the Output Port Register (OPR). OPR(n) = 1 results in OP(n) = LOW and vice versa. Bits of the OPR can be individually set and reset. A bit is set by performing a write operation at address 0xE with the accompanying data specifying the bits to be set (1 = set, 0 = no change).

Likewise, a bit is reset by a write at address 0xF with the accompanying data specifying the bits to be reset (1 = reset, 0 = no change).

Outputs can be also individually assigned specific functions by appropriate programming of the Channel A mode registers (MR1A, MR2A), the Channel B mode registers (MR1B, MR2B), and the Output Port Configuration Register (OPCR).

Please note that these pins drive both HIGH and LOW. **However** when they are programmed to represent interrupt type functions (such as receiver ready, transmitter ready, DMA signals or counter/timer ready) they will be switched to an open drain configuration in which case an external pull-up device would be required.

TRANSMITTER OPERATION

The SCC2681 is conditioned to transmit data when the transmitter is enabled through the command register. The SCC2681 indicates to the CPU that it is ready to accept a character by setting the TxRDY bit in the status register. This condition can be programmed to generate an interrupt request at OP6 or OP7 and INTRN. When a character is loaded into the Transmit Holding Register (THR), the above conditions are negated. Data is transferred from the holding register to transmit shift register when it is idle or has completed transmission of the previous character. The TxRDY conditions are then asserted again which means one full character time of buffering is provided. Characters cannot be loaded into the THR while the transmitter is disabled.

The transmitter converts the parallel data from the CPU to a serial bit stream on the TxD output pin. It automatically sends a start bit followed by the programmed number of data bits, an optional parity bit, and the programmed number of stop bits. The least significant bit is sent first. Following the transmission of the stop bits, if a new character is not available in the THR, the TxD output remains HIGH and the TxEMT bit in the Status Register (SR) will be set to 1. Transmission resumes and the TxEMT bit is cleared when the CPU loads a new character into the THR.

If the transmitter is disabled, it continues operating until the character currently being transmitted is completely sent out. The transmitter can be forced to send a continuous LOW condition by issuing a send break command.

The transmitter can be reset through a software command (0x30). If it is reset, operation ceases immediately and the transmitter must be enabled through the command register before resuming operation. If CTS operation is enable, the CTSN input must be LOW in order for the character to be transmitted. If it goes HIGH in the middle of a transmission, the character in the shift register is transmitted and TxDA then remains in the marking state until CTSN goes LOW. The transmitter can also control the deactivation of the RTSN output. If programmed, the RTSN output will be reset one bit time after the character in the transmit shift register and transmit holding register (if any) are completely transmitted, if the transmitter has been disabled.

Receiver

The SCC2681 is conditioned to receive data when enabled through the command register. The receiver looks for a HIGH-to-LOW (mark-to-space) transition of the start bit on the RxD input pin. If a transition is detected, the state of the RxD pin is sampled each 16× clock for 7 1/2 clocks (16× clock mode) or at the next rising edge of the bit time clock (1× clock mode). If RxD is sampled HIGH, the start bit is invalid and the search for a valid start bit begins again. If RxD is still LOW, a valid start bit is assumed and the receiver continues to sample the input at one bit time intervals at the theoretical center of the bit, until the proper number of data bits and parity bit (if any) have been assembled, and one stop bit has been detected. The least significant bit is received first. The data is then transferred to the Receive Holding Register (RHR) and the RxRDY bit in the SR is set to a 1. This condition can be programmed to generate an interrupt at OP4 or OP5 and INTRN. If the character length is less than eight bits, the most significant unused bits in the RHR are set to zero.

After the stop bit is detected, the receiver will immediately look for the next start bit. However, if a non-zero character was received without a stop bit (framing error) and RxD remains LOW for one half of the bit period after the stop bit was sampled, then the receiver operates as if a new start bit transition had been detected at that point (one-half bit time after the stop bit was sampled).

The parity error, framing error, overrun error and received break state (if any) are strobed into the SR at the received character boundary, before the RxRDY status bit is set. If a break condition is detected (RxD is LOW for the entire character including the stop bit), a character consisting of all zeros will be loaded into the RHR and the received break bit in the SR is set to 1. The RxD input must return to HIGH for two (2) clock edges of the X1 crystal clock for the receiver to recognize the end of the break condition and begin the search for a start bit. **This will usually require a HIGH time of one X1 clock period or 3 X1 edges since the clock of the controller is not synchronous to the X1 clock.**

Receiver FIFO

The RHR consists of a First-In-First-Out (FIFO) stack with a capacity of three characters. Data is loaded from the receive shift register into the top most empty position of the FIFO. The RxRDY bit in the status register is set whenever one or more characters are available to be read, and a FFULL status bit is set if all three stack positions are filled with data. Either of these bits can be selected to cause an interrupt. A read of the RHR outputs the data at the top of the FIFO. After the read cycle, the data FIFO and its associated status bits (see below) are ‘popped’ thus emptying a FIFO position for new data.

Receiver Status Bits

In addition to the data word, three status bits (parity error, framing error, and received break) are also appended to each data character in the FIFO (overrun is not). Status can be provided in two ways, as programmed by the error mode control bit in the mode register. In the ‘character’ mode, status is provided on a character-by-character basis; the status applies only to the character at the top of the FIFO. In the ‘block’ mode, the status provided in the SR for these three bits is the logical-OR of the status for all characters coming to the top of the FIFO since the last ‘reset error’ command was issued. In either mode reading the SR does not affect the FIFO. The FIFO is ‘popped’ only when the RHR is read. Therefore the status register should be read prior to reading the FIFO.

If the FIFO is full when a new character is received, that character is held in the receive shift register until a FIFO position is available. If an additional character is received while this state exits, the contents of the FIFO are not affected; the character previously in the

shift register is lost and the overrun error status bit (SR[4] will be set-upon receipt of the start bit of the new (overrunning) character).

The receiver can control the deactivation of RTS. If programmed to operate in this mode, the RTSN output will be negated (set to '1') when a valid start bit was received and the FIFO is full. When a FIFO position becomes available, the RTSN output will be re-asserted (set to '0') automatically. This feature can be used to prevent an overrun, in the receiver, by connecting the RTSN output to the CTSN input of the transmitting device.

Receiver Reset and Disable

Receiver disable stops the receiver immediately – data being assembled if the receiver shift register is lost. Data and status in the FIFO is preserved and may be read. A re-enable of the receiver after a disable will cause the receiver to begin assembling characters at the next start bit detected.

A receiver reset will discard the present shift register data, reset the receiver ready bit (RxRDY), clear the status of the byte at the top of the FIFO and re-align the FIFO read/write pointers. This has the appearance of "clearing or flushing" the receiver FIFO. In fact, the FIFO is NEVER cleared! The data in the FIFO remains valid until overwritten by another received character. Because of this, erroneous reading or extra reads of the receiver FIFO will miss-align the FIFO pointers and result in the reading of previously read data. A receiver reset will re-align the pointers.

Multidrop Mode

Note: Please see *Application Note AN10251* for more information on this feature.

The DUART is equipped with a wake up mode for multidrop applications. This mode is selected by programming bits MR1A[4:3] or MR1B[4:3] to '11' for Channels A and B, respectively. In this mode of operation, a 'master' station transmits an address character followed by data characters for the addressed 'slave' station. The slave stations, with receivers that are normally disabled, examine the received data stream and 'wake up' the CPU (by setting RxRDY) only upon receipt of an address character. The CPU compares the received address to its station address and enables the receiver if it wishes to receive the subsequent data characters. Upon receipt of another address character, the CPU may disable the receiver to initiate the process again.

A transmitted character consists of a start bit, the programmed number of data bits, and Address/Data (A/D) bit, and the programmed number of stop bits. The polarity of the transmitted A/D bit is selected by the CPU by programming bit MR1A[2]/MR1B[2]. MR1A[2]/MR1B[2] = 0 transmits a zero in the A/D bit position, which identifies the corresponding data bits as data while MR1A[2]/MR1B[2] = 1 transmits a one in the A/D bit position, which identifies the corresponding data bits as an address. The CPU should program the mode register prior to loading the corresponding data bits into the THR.

In this mode, the receiver continuously looks at the received data stream, whether it is enabled or disabled. If disabled, it sets the RxRDY status bit and loads the character into the RHR FIFO if the received A/D bit is a one (address tag), but discards the received character if the received A/D bit is a zero (data tag). If enabled, all received characters are transferred to the CPU via the RHR. In either case, the data bits are loaded into the data FIFO while the A/D bit is loaded into the status FIFO position normally used for parity error (SRA[5] or SRB[5]). Framing error, overrun error, and break detect operate normally whether or not the receive is enabled.

勝 特 力 材 料 886-3-5753170
胜特力电子(上海) 86-21-54151736
胜特力电子(深圳) 86-755-83298787
Http://www.100y.com.tw

PROGRAMMING

The operation of the DUART is programmed by writing control words into the appropriate registers. Operational feedback is provided via status registers which can be read by the CPU. The addressing of the registers is described in Table 1.

The contents of certain control registers are initialized to zero on RESET. Care should be exercised if the contents of a register are changed during operation, since certain changes may cause operational problems.

For example, changing the number of bits per character while the transmitter is active may cause the transmission of an incorrect character. In general, the contents of the MR, the CSR, and the OPCR should only be changed while the receiver(s) and transmitter(s) are not enabled, and certain changes to the ACR should only be made while the C/T is stopped.

Mode registers 1 and 2 of each channel are accessed via independent auxiliary pointers. The pointer is set to MR1x by RESET or by issuing a 'reset pointer' command via the corresponding command register. Any read or write of the mode register while the pointer is at MR1x, switches the pointer to MR2x. The pointer then remains at MR2x, so that subsequent accesses are always to MR2x unless the pointer is reset to MR1x as described above.

Mode, command, clock select, and status registers are duplicated for each channel to provide total independent operation and control. Refer to Table 2 for register bit descriptions.

Table 1. SCC2681 Register Addressing

A3	A2	A1	A0	READ (RDN = 0)	WRITE (WRN = 0)
0	0	0	0	Mode Register A (MR1A, MR2A)	Mode Register A (MR1A, MR2A)
0	0	0	1	Status Register A (SRA)	Clock Select Register A (CSRA)
0	0	1	0	BRG Extend *	Command Register A (CRA)
0	0	1	1	Rx Holding Register A (RHRA)	Tx Holding Register A (THRA)
0	1	0	0	Input Port Change Register (IPCR)	Aux. Control Register (ACR)
0	1	0	1	Interrupt Status Register (ISR)	Interrupt Mask Register (IMR)
0	1	1	0	Counter/Timer Upper Value (CTU)	C/T Upper Preset Value (CRUR)
0	1	1	1	Counter/Timer Lower Value (CTL)	C/T Lower Preset Value (CTLR)
1	0	0	0	Mode Register B (MR1B, MR2B)	Mode Register B (MR1B, MR2B)
1	0	0	1	Status Register B (SRB)	Clock Select Register B (CSRB)
1	0	1	0	1×/16× Test	Command Register B (CRB)
1	0	1	1	Rx Holding Register B (RHRB)	Tx Holding Register B (THRB)
1	1	0	0	Use for scratch pad	Use for scratch pad
1	1	0	1	Input Ports IP0 to IP6	Output Port Conf. Register (OPCR)
1	1	1	0	Start Counter Command	Set Output Port Bits Command
1	1	1	1	Stop Counter Command	Reset Output Port Bits Command

* See Table 5 for BRG Extended frequencies in this data sheet, and *"Extended baud rates for SCN2681, SCN68681, SCC2691, SCC2692, SCC68692 and SCC2698B"* in application notes elsewhere in this publication.

勝 特 力 材 料 886-3-5753170
胜特力电子(上海) 86-21-54151736
胜特力电子(深圳) 86-755-83298787
Http://www.100y.com.tw

勝 特 力 材 料 886-3-5753170
胜特力电子(上海) 86-21-54151736
胜特力电子(深圳) 86-755-83298787
Http://www.100y.com.tw

Table 2. Register Bit Formats

	BIT 7	BIT 6	BIT 5	BIT 4 BIT 3	BIT 2	BIT 1 BIT 0
	RxRTS CONTROL	RxINT SELECT	ERROR MODE*	PARITY MODE	PARITY TYPE	BITS PER CHARACTER
MR1A MR1B	0 = No 1 = Yes	0 = RxRDY 1 = FFULL	0 = Char 1 = Block	00 = With Parity 01 = Force Parity 10 = No Parity 11 = Multidrop Mode**	0 = Even 1 = Odd	00 = 5 01 = 6 10 = 7 11 = 8

NOTE:
* In block error mode, block error conditions must be cleared by using the error reset command (command 4x) or a receiver reset.
** Please see Receiver Reset note on page 21.

	BIT 7 BIT 6	BIT 5	BIT 4	BIT 3 BIT 2 BIT 1 BIT 0
	CHANNEL MODE	TxRTS CONTROL	CTS ENABLE Tx	STOP BIT LENGTH*
MR2A MR2B	00 = Normal 01 = Auto-Echo 10 = Local loop 11 = Remote loop	0 = No 1 = Yes	0 = No 1 = Yes	0 = 0.563 4 = 0.813 8 = 1.563 C = 1.813 1 = 0.625 5 = 0.875 9 = 1.625 D = 1.875 2 = 0.688 6 = 0.938 A = 1.688 E = 1.938 3 = 0.750 7 = 1.000 B = 1.750 F = 2.000

NOTE:
*Add 0.5 to values shown for 0 – 7 if channel is programmed for 5 bits/char.

	BIT 7 BIT 6 BIT 5 BIT 4	BIT 3 BIT 2 BIT 1 BIT 0
	RECEIVER CLOCK SELECT	TRANSMITTER CLOCK SELECT
CSRA CSRB	See Text	See Text

NOTE:
* See Table 5 for BRG Test frequencies in this data sheet, and *"Extended baud rates for SCN2681, SCN68681, SCC2691, SCC2692, SCC68692 and SCC2698B"* in application notes elsewhere in this publication.

	BIT 7	BIT 6 BIT 5 BIT 4	BIT 3	BIT 2	BIT 1	BIT 0
		MISCELLANEOUS COMMANDS	DISABLE Tx	ENABLE Tx	DISABLE Rx	ENABLE Rx
CRA CRB	Not used – must be 0	See Text	0 = No 1 = Yes	0 = No 1 = Yes	0 = No 1 = Yes	0 = No 1 = Yes

NOTE:
*Access to the upper three bits of the command register should be separated by three (3) edges of the X1 clock. A disabled transmitter cannot be loaded.

	BIT 7	BIT 6	BIT 5	BIT 4	BIT 3	BIT 2	BIT 1	BIT 0
	RECEIVED BREAK*	FRAMING ERROR*	PARITY ERROR*	OVERRUN ERROR	TxEMT	TxRDY	FFULL	RxRDY
SRA SRB	0 = No 1 = Yes	0 = No 1 = Yes	0 = No 1 = Yes	0 = No 1 = Yes	0 = No 1 = Yes	0 = No 1 = Yes	0 = No 1 = Yes	0 = No 1 = Yes

NOTE:
* These status bits are appended to the corresponding data character in the receive FIFO. A read of the status provides these bits (7:5) from the top of the FIFO together with bits (4:0). These bits are cleared by a "reset error status" command. In character mode they are discarded when the corresponding data character is read from the FIFO. In block error mode, block error conditions must be cleared by using the error reset command (command 4x) or a receiver reset.

	BIT 7	BIT 6	BIT 5	BIT 4	BIT 3 BIT 2	BIT 1 BIT 0
	OP7	OP6	OP5	OP4	OP3	OP2
OPCR	0 = OPR[7] 1 = TxRDYB	0 = OPR[6] 1 = TxRDYA	0 = OPR[5] 1 = RxRDY/ FFULLB	0 = OPR[4] 1 = RxRDY/ FFULLA	00 = OPR[3] 01 = C/T OUTPUT 10 = TxCB(1x) 11 = RxCB(1x)	00 = OPR[2] 01 = TxCA(16x) 10 = TxCA(1x) 11 = RxCA(1x)

OPR	BIT 7		BIT 6		BIT 5		BIT 4		BIT 3		BIT 2		BIT 1		BIT 0	
OPR bit	0	1	0	1	0	1	0	1	0	1	0	1	0	1	0	1
OP pin	1	0	1	0	1	0	1	0	1	0	1	0	1	0	1	0

NOTE:
The level at the OP pin is the inverse of the bit in the OPR register.

Table 2. Register Bit Formats (Continued)

	BIT 7	BIT 6	BIT 5	BIT 4	BIT 3	BIT 2	BIT 1	BIT 0
ACR	**BRG SET SELECT**	**COUNTER/TIMER MODE AND SOURCE**			**DELTA IP 3 INT**	**DELTA IP 2 INT**	**DELTA IP 1 INT**	**DELTA IP 0 INT**
	0 = set 1 1 = set 2	See Table 4			0 = Off 1 = On	0 = Off 1 = On	0 = Off 1 = On	0 = Off 1 = On

	BIT 7	BIT 6	BIT 5	BIT 4	BIT 3	BIT 2	BIT 1	BIT 0
IPCR	**DELTA IP 3**	**DELTA IP 2**	**DELTA IP 1**	**DELTA IP 0**	**IP 3**	**IP 2**	**IP 1**	**IP 0**
	0 = No 1 = Yes	0 = No 1 = Yes	0 = No 1 = Yes	0 = No 1 = Yes	0 = LOW 1 = HIGH	0 = LOW 1 = HIGH	0 = LOW 1 = HIGH	0 = LOW 1 = HIGH

	BIT 7	BIT 6	BIT 5	BIT 4	BIT 3	BIT 2	BIT 1	BIT 0
ISR	**INPUT PORT CHANGE**	**DELTA BREAK B**	**RxRDY/ FFULLB**	**TxRDYB**	**COUNTER READY**	**DELTA BREAK A**	**RxRDY/ FFULLA**	**TxRDYA**
	0 = No 1 = Yes	0 = No 1 = Yes	0 = No 1 = Yes	0 = No 1 = Yes	0 = No 1 = Yes	0 = No 1 = Yes	0 = No 1 = Yes	0 = No 1 = Yes

	BIT 7	BIT 6	BIT 5	BIT 4	BIT 3	BIT 2	BIT 1	BIT 0
IMR	**IN. PORT CHANGE INT**	**DELTA BREAK B INT**	**RxRDY/ FFULLB INT**	**TxRDYB INT**	**COUNTER READY INT**	**DELTA BREAK A INT**	**RxRDY/ FFULLA INT**	**TxRDYA INT**
	0 = Off 1 = On	0 = Off 1 = On	0 = Off 1 = On	0 = Off 1 = On	0 = Off 1 = On	0 = Off 1 = On	0 = Off 1 = On	0 = Off 1 = On

	BIT 7	BIT 6	BIT 5	BIT 4	BIT 3	BIT 2	BIT 1	BIT 0
CTUR	**C/T[15]**	**C/T[14]**	**C/T[13]**	**C/T[12]**	**C/T[11]**	**C/T[10]**	**C/T[9]**	**C/T[8]**

	BIT 7	BIT 6	BIT 5	BIT 4	BIT 3	BIT 2	BIT 1	BIT 0
CTLR	**C/T[7]**	**C/T[6]**	**C/T[5]**	**C/T[4]**	**C/T[3]**	**C/T[2]**	**C/T[1]**	**C/T[0]**

SCPR	**SCPR[7:0]**
	7 general purpose bits or flags

	BIT 7	BIT 6	BIT 5	BIT 4	BIT 3	BIT 2	BIT 1	BIT 0
SOPR	**OP7**	**OP6**	**OP5**	**OP4**	**OP3**	**OP2**	**OP1**	**OP0**
	0 = no change 1 = set bit	0 = no change 1 = set bit	0 = no change 1 = set bit	0 = no change 1 = set bit	0 = no change 1 = set bit	0 = no change 1 = set bit	0 = no change 1 = set bit	0 = no change 1 = set bit

	BIT 7	BIT 6	BIT 5	BIT 4	BIT 3	BIT 2	BIT 1	BIT 0
ROPR	**OP7**	**OP6**	**OP5**	**OP4**	**OP3**	**OP2**	**OP1**	**OP0**
	0 = no change 1 = reset bit	0 = no change 1 = reset bit	0 = no change 1 = reset bit	0 = no change 1 = reset bit	0 = no change 1 = reset bit	0 = no change 1 = reset bit	0 = no change 1 = reset bit	0 = no change 1 = reset bit

勝 特 力 材 料 886-3-5753170
胜特力电子(上海) 86-21-54151736
胜特力电子(深圳) 86-755-83298787
Http://www.100y.com.tw

MR1A – Channel A Mode Register 1

MR1A is accessed when the Channel A MR pointer points to MR1. The pointer is set to MR1 by RESET or by a 'set pointer' command applied via CRA. After reading or writing MR1A, the pointer will point to MR2A.

MR1A[7] – Channel A Receiver Request-to-Send Flow Control
This bit controls the deactivation of the RTSAN output (OP0) by the receiver. This output is normally asserted by setting OPR[0] and negated by resetting OPR[0]. MR1A[7] = 1 causes RTSAN to be negated upon receipt of a valid start bit if the Channel A FIFO is full. However, OPR[0] is not reset and RTSAN will be asserted again when an empty FIFO position is available. This feature can be used for flow control to prevent overrun in the receiver by using the RTSAN output signal to control the CTSN input of the transmitting device.

MR1A[6] – Channel A Receiver Interrupt Select
This bit selects either the Channel A receiver ready status (RxRDY) or the Channel A FIFO full status (FFULL) to be used for CPU interrupts. It also causes the selected bit to be output on OP4 if it is programmed as an interrupt output via the OPCR.

MR1A[5] – Channel A Error Mode Select
This bit select the operating mode of the three FIFOed status bits (FE, PE, received break) for Channel A. In the 'character' mode, status is provided on a character-by-character basis; the status applies only to the character at the top of the FIFO. In the 'block" mode, the status provided in the SR for these bits is the accumulation (logical-OR) of the status for all characters coming to the top of the FIFO since the last 'reset error' command for Channel A was issued.

MR1A[4:3| – Channel A Parity Mode Select
If 'with parity' or 'force parity' is selected a parity bit is added to the transmitted character and the receiver performs a parity check on incoming data MR1A[4:3] + 11 selects Channel A to operate in the special multidrop mode described in the Operation section.

MR1A[2] – Channel A Parity Type Select
Note: Setting these bits to '11' causes a partial enabling of the receiver. Set these bits to other than '11' if a software or hardware reset is required for some type of error recovery.

This bit selects the parity type (odd or even) if the 'with parity' mode is programmed by MR1A[4:3], and the polarity of the forced parity bit if the 'force parity' mode is programmed. It has no effect if the 'no parity' mode is programmed. In the special multidrop mode it selects the polarity of the A/D bit.

MR1A[1:0] – Channel A Bits Per Character Select
This field selects the number of data bits per character to be transmitted and received. The character length does not include the start, parity, and stop bits.

勝 特 力 材 料 886-3-5753170
胜特力电子(上海) 86-21-54151736
胜特力电子(深圳) 86-755-83298787
Http://www.100y.com.tw

MR2A – Channel A Mode Register 2

MR2A is accessed when the Channel A MR pointer points to MR2, which occurs after any access to MR1A. Accesses to MR2A do not change the pointer.

MR2A[7:6] – Channel A Mode Select
Each channel of the DUART can operate in one of four modes. MR2A[7:6] = 00 is the normal mode, with the transmitter and receiver operating independently. MR2A[7:6] = 01 places the channel in the automatic echo mode, which automatically re-transmits the received data. The following conditions are true while in automatic echo mode:

1. Received data is re-clocked and retransmitted on the TxDA output.
2. The receive clock is used for the transmitter.
3. The receiver must be enabled, but the transmitter need not be enabled.
4. The Channel A TxRDY and TxEMT status bits are inactive.
5. The received parity is checked, but is not regenerated for transmission, i.e. transmitted parity bit is as received.
6. Character framing is checked, but the stop bits are retransmitted as received.
7. A received break is echoed as received until the next valid start bit is detected.
8. CPU to receiver communication continues normally, but the CPU to transmitter link is disabled.

Two diagnostic modes can also be configured. MR2A[7:6] = 10 selects local loopback mode. In this mode:

1. The transmitter output is internally connected to the receiver input.
2. The transmit clock is used for the receiver.
3. The TxDA output is held HIGH.
4. The RxDA input is ignored.
5. The transmitter must be enabled, but the receiver need not be enabled.
6. CPU to transmitter and receiver communications continue normally.

The second diagnostic mode is the remote loopback mode, selected by MR2A[7:6] = 11. In this mode:

1. Received data is re-clocked and re-transmitted on the TxDA output.
2. The receive clock is used for the transmitter.
3. Received data is not sent to the local CPU, and the error status conditions are inactive.
4. The received parity is not checked and is not regenerated for transmission, i.e., transmitted parity is as received.
5. The receiver must be enabled.
6. Character framing is not checked and the stop bits are retransmitted as received.
7. A received break is echoed as received until the next valid start bit is detected.

The user must exercise care when switching into and out of the various modes. The selected mode will be activated immediately upon mode selection, even if this occurs in the middle of a received

or transmitted character. Likewise, if a mode is deselected the device will switch out of the mode immediately. An exception to this is switching out of autoecho or remote loopback modes: if the deselection occurs just after the receiver has sampled the stop bit (indicated in autoecho by assertion of RxRDY), and the transmitter is enabled, the transmitter will remain in autoecho mode until the entire stop has been retransmitted.

MR2A[5] – Channel A Transmitter Request-to-Send Control
CAUTION: When the transmitter controls the OP pin (usually used for the RTSN signal) the meaning of the pin is not RTSN at all! Rather, it signals that the transmitter has finished the transmission (i.e., end of block).

Note: Please see *Application Note AN10251* for more information on this subject.

This bit allows deactivation of the RTSN output by the transmitter. This output is manually asserted and negated by the appropriate commands issued via the SOPR and ROPR registers. MR2[5] set to 1 caused the RTSN to be reset automatically one bit time after the character(s) in the transmit shift register and in the THR (if any) are completely transmitted (including the programmed number of stop bits) if a previously issued transmitter disable is pending. This feature can be used to automatically terminate the transmission as follows:

1. Program the auto-reset mode: MR2[5]=1
2. Enable transmitter, if not already enabled
3. Set OPR[0] or OPR[1] to ‘1’ via the SOPR and ROPR registers
4. Send message
5. After the last character of the message is loaded to the THR, disable the transmitter. (If the transmitter is underrun, a special case exists. See note below.)
6. The last character will be transmitted and the RTSN will be reset one bit time after the last stop bit is sent.

NOTE: The transmitter is in an underrun condition when both the TxRDY and the TxEMT bits are set. This condition also exists immediately after the transmitter is enabled from the disabled or reset state. When using the above procedure with the transmitter in the underrun condition, the issuing of the transmitter disable must be delayed from the loading of a single, or last, character until the TxRDY becomes active again after the character is loaded.

MR2A[4] – Channel A Clear-to-Send Control
If this bit is 0, CTSAN has no effect on the transmitter. If this bit is a 1, the transmitter checks the state of CTSAN (IPO) each time it is ready to send a character. If IPO is asserted (LOW), the character is transmitted. If it is negated (HIGH), the TxDA output remains in the marking state and the transmission is delayed until CTSAN goes LOW. Changes in CTSAN while a character is being transmitted do not affect the transmission of that character..

MR2A[3:0] – Channel A Stop Bit Length Select
This field programs the length of the stop bit appended to the transmitted character. Stop bit lengths of .563 TO 1 AND .563 to 2 bits. In increments of 0.625 bit, can be programmed for character lengths of 6, 7, and 8 bits. For a character lengths of 5 bits, 1.0625 to 2 stop bits can be programmed in increments of .0625 bit.

The receiver only checks for a ‘mark’ condition at the center of the first stop bit position (one bit time after the last data bit, or after the parity bit is enabled) in all cases.

If an external 1× clock is used for the transmitter, MR2A[3] = 0 selects one stop bit and MR2A[3] = 1 selects two stop bits to be transmitted.

MR1B – Channel B Mode Register 1

MR1B is accessed when the Channel B MR pointer points to MR1. The pointer is set to MR1 by RESET or by a ‘set pointer’ command applied via CRB. After reading or writing MR1B, the pointer will point to MR2B.

MR2B – Channel B Mode Register 2

MR2B is accessed when the Channel B MR pointer points to MR2, which occurs after any access to MR1B. Accesses to MR2B do not change the pointer.

The bit definitions for mode registers 1 and 2 are identical to the bit definitions for MRA and MR2A except that all control actions apply to the Channel B receiver and transmitter and the corresponding inputs and outputs.

CSRA – Channel A Clock Select Register

STandard baud rates are shown below. A read at address 0x2 changes the baud rate generator to give higher speed baud rates. (See Table 5 on page 21.) A subsequent read at address 0x2 changes the baud rate generator back to standard rates. In other words, each read at 0x2 toggles the controlling flip-flop.

Table 3. Bit Rate Generator Characteristics Crystal or Clock = 3.6864MHz

Normal rate (baud)	Actual 16× clock (kHz)	Error (%)
50	0.8	0
75	1.2	0
110	1.759	–0.069
134.5	2.153	0.059
150	2.4	0
200	3.2	0
300	4.8	0
600	9.6	0
1050	16.756	–0.260
1200	19.2	0
1800	28.8	0
2000	32.056	0.175
2400	38.4	0
4800	76.8	0
7200	115.2	0
9600	153.6	0
14.4 k	230.4	0
19.2 k	307.2	0
28.8 k	460.8	0
38.4 k	614.4	0
57.6 k	921.6	0
115.2 k	1843.2 k	0

NOTE: Duty cycle of 16× clock is 50% ± 1%.

Asynchronous UART communications can tolerate frequency error of 4.1% to 6.7% in a “clean” communications channel. The percent of error changes as the character length changes. The above percentages range from 5 bits not parity to 8 bits with parity and one stop bit. The error with 8 bits not parity and one stop bit is 4.6%. If a stop bit length of 9/16 is used, the error tolerance will approach 0 due to a variable error of up to 1/16 bit time in receiver clock phase alignment to the start bit.

勝 特 力 材 料 886-3-5753170
胜特力电子(上海) 86-21-54151736
胜特力电子(深圳) 86-755-83298787
Http://www.100y.com.tw

CSRA[7:4] – Channel A Receiver Clock Select
This field selects the baud rate clock for the Channel A receiver as follows (X1 rate at 3.6864 MHz):

CSRA[7:4]	ACR[7] = 0	Baud Rate ACR[7] = 1
0000	50	75
0001	110	110
0010	134.5	134.5
0011	200	150
0100	300	300
0101	600	600
0110	1,200	1,200
0111	1,050	2,000
1000	2,400	2,400
1001	4,800	4,800
1010	7,200	1,800
1011	9,600	9,600
1100	38.4k	19.2k
1101	Timer	Timer
1110	IP4–16×	IP4–16×
1111	IP4–1×	IP4–1×

(**See also Table 5 for other rates to 115.2 kHz**)

Rates will change in direct proportion to X1 at 3.6864 MHz.
The receiver clock is always a 16× clock except for CSRA[7] = 1111.

CSRA[3:0] – Channel A Transmitter Clock Select
This field selects the baud rate clock for the Channel A transmitter. The field definition is as per CSR[7:4] except as follows:

CSRA[3:0]	ACR[7] = 0	Baud Rate ACR[7] = 1
1110	IP3–16×	IP3–16×
1111	IP3–1×	IP3–1×

The transmitter clock is always a 16× clock except for CSR[3:0] = 1111.

CSRB – Channel B Clock Select Register

CSRB[7:4] – Channel B Receiver Clock Select
This field selects the baud rate clock for the Channel B receiver. The field definition is as per CSRA[7:4] except as follows:

CSRB[7:4]	ACR[7] = 0	Baud Rate ACR[7] = 1
1110	IP6–16×	IP6–16×
1111	IP6–1×	IP6–1×

The receiver clock is always a 16× clock except for CSRB[7:4] = 1111.

CSRB[3:0] – Channel B Transmitter Clock Select
This field selects the baud rate clock for the Channel B transmitter. The field definition is as per CSRA[7:4] except as follows:

CSRB[3:0]	ACR[7] = 0	Baud Rate ACR[7] = 1
1110	IP5–16×	IP5–16×
1111	IP5–1×	IP5–1×

The transmitter clock is always a 16× clock except for CSRB[3:0] = 1111.

勝 特 力 材 料 886-3-5753170
胜特力电子(上海) 86-21-54151736
胜特力电子(深圳) 86-755-83298787
Http://www.100y.com.tw

CRA – Channel A Command Register

CRA is a register used to supply commands to Channel A. Multiple commands can be specified in a single write to CRA as long as the commands are non-conflicting, e.g., the 'enable transmitter' and 'reset transmitter' commands cannot be specified in a single command word.

CRA[7] – Not Used
Must be set to zero.

CRA[6:4] – Channel A Miscellaneous Command
The encoded value of this field may be used to specify a single command as follows:

CRA[6:4] – COMMAND

000 No command.

001 Reset MR pointer. Causes the Channel A MR pointer to point to MR1.

010 Reset receiver. Resets the Channel A receiver as if a hardware reset had been applied. The receiver is disabled and the FIFO is flushed.

011 Reset transmitter. Resets the Channel A transmitter as if a hardware reset had been applied.

100 Reset error status. Clears the Channel A Received Break, Parity Error, and Overrun Error bits in the status register (SRA[7:4]). Used in character mode to clear OE status (although RB, PE and FE bits will also be cleared) and in block mode to clear all error status after a block of data has been received.

101 Reset Channel A break change interrupt. Causes the Channel A break detect change bit in the interrupt status register (ISR[2]) to be cleared to zero.

110 Start break. Forces the TxDA output LOW (spacing). If the transmitter is empty the start of the break condition will be delayed up to two bit times. If the transmitter is active the break begins when transmission of the character is completed. If a character is in the THR, the start of the break will be delayed until that character, or any other loaded subsequently are transmitted. The transmitter must be enabled for this command to be accepted.

111 Stop break. The TxDA line will go HIGH (marking) within two bit times. TxDA will remain HIGH for one bit time before the next character, if any, is transmitted.

CRA[3] – Disable Channel A Transmitter
This command terminates transmitter operation and reset the TxDRY and TxEMT status bits. However, if a character is being transmitted or if a character is in the THR when the transmitter is disabled, the transmission of the character(s) is completed before assuming the inactive state. A disable transmitter cannot be loaded.

CRA[2] – Enable Channel A Transmitter
Enables operation of the Channel A transmitter. The TxRDY status bit will be asserted.

CRA[1] – Disable Channel A Receiver
This command terminates operation of the receiver immediately – a character being received will be lost. The command has no effect on the receiver status bits or any other control registers. If the special multidrop mode is programmed, the receiver operates even if it is disabled. See Operation section.

CRA[0] – Enable Channel A Receiver
Enables operation of the Channel A receiver. If not in the special wake up mode, this also forces the receiver into the search for start-bit state.

Note: Performing disable and enable at the same time results in disable.

CRB – Channel B Command Register

CRB is a register used to supply commands to Channel B. Multiple commands can be specified in a single write to CRB as long as the commands are non-conflicting, e.g., the 'enable transmitter' and 'reset transmitter' commands cannot be specified in a single command word.

The bit definitions for this register are identical to the bit definitions for CRA, except that all control actions apply to the Channel B receiver and transmitter and the corresponding inputs and outputs.

SRA – Channel A Status Register

SRA[7] – Channel A Received Break

This bit indicates that an all zero character of the programmed length has been received without a stop bit. Only a single FIFO position is occupied when a break is received; further entries to the FIFO are inhibited until the RxDA line to the marking state for at least one-half a bit, time two successive edges of the internal or external 1× clock. This will usually require a HIGH time of one 1× clock period or 3 1× edges since the clock of the controller is not synchronous to the 1× clock.

When this bit is set, the Channel A 'change in break' bit in the ISR (ISR[2]) is set. ISR[2] is also set when the end of the break condition, as defined above, is detected.

The break detect circuitry can detect breaks that originate in the middle of a received character. However, if a break begins in the middle of a character, it must persist until at least the end of the next character time in order for it to be detected.

SRA[6] – Channel A Framing Error

This bit, when set, indicates that a stop bit was not detected when the corresponding data character in the FIFO was received. The stop bit check is made in the middle of the first bit position.

SRA[5] – Channel A Parity Error

This bit is set when the 'with parity' or 'force parity' mode is programmed and the corresponding character in the FIFO was received with incorrect parity.

In the special multidrop mode the parity error bit stores the receive A/D bit.

SRA[4] – Channel A Overrun Error

This bit, when set indicates that one or more characters in the received data stream have been lost. It is set upon receipt of a new character when the FIFO is full and a character is already in the receive shift register waiting for an empty FIFO position. When this occurs, the character in the receive shift register (and its break detect, parity error and framing error status, if any) is lost.

This bit is cleared by a 'reset error status' command.

SRA[3] – Channel A Transmitter Empty (TxEMTA)

This bit will be set when the transmitter underruns, i.e., both the TxEMT and TxRDY bits are set. This bit and TxRDY are set when the transmitter is first enabled and at any time it is re-enabled after either (a) reset, or (b) the transmitter has assumed the disabled state. It is always set after transmission of the last stop bit of a character if no character is in the THR awaiting transmission.

It is reset when the THR is loaded by the CPU, a pending transmitter disable is executed, the transmitter is reset, or the transmitter is disabled while in the underrun condition.

SRA[2] – Channel A Transmitter Ready (TxRDYA)

This bit, when set, indicates that the THR is empty and ready to be loaded with a character. This bit is cleared when the THR is loaded by the CPU and is set when the character is transferred to the transmit shift register. TxRDY is reset when the transmitter is disabled or reset, and is set when the transmitter is first enabled, viz., characters loaded into the THR while the transmitter is disabled will not be transmitted.

SRA[1] – Channel A FIFO Full (FFULLA)

This bit is set when a character is transferred from the receive shift register to the receive FIFO and the transfer causes the FIFO to become full, i.e., all three FIFO positions are occupied. It is reset when the CPU reads the RHR. If a character is waiting in the receive shift register because the FIFO is full, FFULL will not be reset when the CPU reads the RHR.

SRA[0] – Channel A Receiver Ready (RxRDYA)

This bit indicates that a character has been received and is waiting in the FIFO to be read by the CPU. It is set when the character is transferred from the receive shift to the FIFO and reset when the CPU reads the RHR, if after this read there are not more characters still in the FIFO.

SRB – Channel B Status Register

The bit definitions for this register are identical to the bit definitions for SRA, except that all status applies to the Channel B receiver and transmitter and the corresponding inputs and outputs.

勝 特 力 材 料 886-3-5753170
胜特力电子(上海) 86-21-54151736
胜特力电子(深圳) 86-755-83298787
Http://www.100y.com.tw

勝 特 力 材 料 886-3-5753170
胜特力电子(上海) 86-21-54151736
胜特力电子(深圳) 86-755-83298787
Http://www.100y.com.tw

OPCR – Output Port Configuration Register

OPCR[7] – OP7 Output Select
This bit programs the OP7 output to provide one of the following:
0 – The complement of OPR[7].
1 – The Channel B transmitter interrupt output which is the complement of TxRDYB. When in this mode OP7 acts as an Open-drain output. Note that this output is not masked by the contents of the IMR.

OPCR[6] – OP6 Output Select
This bit programs the OP6 output to provide one of the following:
0 – The complement of OPR[6].
1 – The Channel A transmitter interrupt output which is the complement of TxRDYA. When in this mode OP6 acts as an Open-drain output. Note that this output is not masked by the contents of the IMR.

OPCR[5] – OP5 Output Select
This bit programs the OP5 output to provide one of the following:
0 – The complement of OPR[5].
1 – The Channel B transmitter interrupt output which is the complement of ISR[5]. When in this mode OP5 acts as an Open-drain output. Note that this output is not masked by the contents of the IMR.

OPCR[4] – OP4 Output Select
This field programs the OP4 output to provide one of the following:
0 – The complement of OPR[4].
1 – The Channel B transmitter interrupt output which is the complement of ISR[1]. When in this mode OP4 acts as an Open-drain output. Note that this output is not masked by the contents of the IMR.

OPCR[3:2] – OP3 Output Select
This bit programs the OP3 output to provide one of the following:
00 – The complement of OPR[3].
01 – The counter/timer output, in which case OP3 acts as an Open-drain output. In the timer mode, this output is a square wave at the programmed frequency. In the counter mode, the output remains HIGH until terminal count is reached, at which time it goes LOW. The output returns to the HIGH state when the counter is stopped by a stop counter command. Note that this output is not masked by the contents of the IMR.
10 – The 1× clock for the Channel B transmitter, which is the clock that shifts the transmitted data. If data is not being transmitted, a free running 1× clock is output.
11 – The 1× clock for the Channel B receiver, which is the clock that samples the received data. If data is not being received, a free running 1× clock is output.

OPCR[1:0] – OP2 Output Select
This field programs the OP2 output to provide one of the following:
00 – The complement of OPR[2].
01 – The 16× clock for the Channel A transmitter. This is the clock selected by CSRA[3:0], and will be a 1× clock if CSRA[3:0] = 1111.
10 – The 1× clock for the Channel A transmitter, which is the clock that shifts the transmitted data. If data is not being transmitted, a free running 1× clock is output.
11 – The 1× clock for the Channel A receiver, which is the clock that samples the received data. If data is not being received, a free running 1× clock is output.

ACR – Auxiliary Control Register

ACR[7] – Baud Rate Generator Set Select
This bit selects one of two sets of baud rates to be generated by the BRG:

Set 1: 50, 110, 134.5, 200, 300, 600, 1.05 k, 1.2 k, 2.4 k, 4.8 k, 7.2 k, 9.6 k, and 38.4 k baud.
Set 2: 75, 110, 134.5, 150, 300, 600, 1.2 k, 1.8 k, 2.0 k, 2.4 k, 4.8 k, 9.6 k, and 19.2 k baud.

Please see Table 5 for rates to 115.2 k baud.

The selected set of rates is available for use by the Channel A and B receivers and transmitters as described in CSRA and CSRB. Baud rate generator characteristics are given in Table 3.

ACR[6:4] – Counter/Timer Mode And Clock Source Select
This field selects the operating mode of the counter/timer and its clock source as shown in Table 4.

Table 4. ACR 6:4 Field Definition

ACR 6:4	MODE	CLOCK SOURCE
000	Counter	External (IP2)
001	Counter	TxCA – 1× clock of Channel A transmitter
010	Counter	TxCB – 1× clock of Channel B transmitter
011	Counter	Crystal or external clock (X1/CLK) divided by 16
100	Timer (square wave)	External (IP2)
101	Timer (square wave)	External (IP2) divided by 16
110	Timer (square wave)	Crystal or external clock (X1/CLK)
111	Timer (square wave)	Crystal or external clock (X1/CLK) divided by 16

NOTE: Timer mode generates a squarewave.

ACR[3:0] – IP3, IP2, IP1, IP0 Change-of-State Interrupt Enable
This field selects which bits of the input port change register (IPCR) cause the input change bit in the interrupt status register (ISR[7]) to be set. If a bit is in the 'on' state the setting of the corresponding bit in the IPCR will also result in the setting of ISR[7], which results in the generation of an interrupt output if IMR[7] = 1. If a bit is in the 'off' state, the setting of that bit in the IPCR has no effect on ISR[7].

IPCR – Input Port Change Register

IPCR[7:4] – IP3, IP2, IP1, IP0 Change-of-State
These bits are set when a change-of-state, as defined in the input port section of this data sheet, occurs at the respective input pins. **They are cleared when the IPCR is read by the CPU.** A read of the IPCR also clears ISR[7], the input change bit in the interrupt status register. The setting of these bits can be programmed to generate an interrupt to the CPU.

IPCR[3:0] – IP3, IP2, IP1, IP0 Current State
These bits provide the current state of the respective inputs. The information is unlatched and reflects the state of the input pins at the time the IPCR is read.

ISR – Interrupt Status Register

This register provides the status of all potential interrupt sources. The contents of this register are masked by the Interrupt Mask Register (IMR). If a bit in the ISR is a '1' and the corresponding bit in the IMR is also a '1', the INTRN output will be asserted. If the corresponding bit in the IMR is a zero, the state of the bit in the ISR has no effect on the INTRN output. Note that the IMR does not mask the reading of the ISR – the true status will be provided regardless of the contents of the IMR. The contents of this register are initialized to 00_{16} when the DUART is reset.

ISR[7] – Input Port Change Status
This bit is a '1' when a change-of-state has occurred at the IP0, IP1, IP2, or IP3 inputs and that event has been selected to cause an interrupt by the programming of ACR[3:0]. The bit is cleared when the CPU reads the IPCR.

ISR[6] – Channel B Change In Break
This bit, when set, indicates that the Channel B receiver has detected the beginning or the end of a received break. It is reset when the CPU issues a Channel B 'reset break change interrupt' command.

ISR[5] – Channel B Receiver Ready or FIFO Full
The function of this bit is programmed by MR1B[6]. If programmed as receiver ready, it indicates that a character has been received in Channel B and is waiting in the FIFO to be read by the CPU. It is set when the character is transferred from the receive shift register to the FIFO and reset when the CPU reads the RHR. If after this read there are more characters still in the FIFO the bit will be set again after the FIFO is 'popped'. If programmed as FIFO full, it is set when a character is transferred from the receive holding register to the receive FIFO and the transfer caused the Channel B FIFO to become full; i.e., all three FIFO positions are occupied. It is reset when the CPU reads the RHR. If a character is waiting in the receive shift register because the FIFO is full, the bit will be set again when the waiting character is loaded into the FIFO.

ISR[4] – Channel B Transmitter Ready
This bit is a duplicate of TxRDYB (SRB[2]).

ISR[3] – Counter Ready
In the counter mode, this bit is set when the counter reaches terminal count and is reset when the counter is stopped by a stop counter command.

In the timer mode, this bit is set once each cycle of the generated square wave (every other time that the counter/timer reaches zero count). The bit is reset by a stop counter command. The command, however, does not stop the counter/timer.

ISR[2] – Channel A Change in Break
This bit, when set, indicates that the Channel A receiver has detected the beginning or the end of a received break. It is reset when the CPU issues a Channel A 'reset break change interrupt' command.

ISR[1] – Channel A Receiver Ready Or FIFO Full
The function of this bit is programmed by MR1A[6]. If programmed as receiver ready, it indicates that a character has been received in Channel A and is waiting in the FIFO to be read by the CPU. It is set when the character is transferred from the receive shift register to the FIFO and reset when the CPU read the RHR. IF after this read there are more characters still in the FIFO the bit will be set again after the FIFO is 'popped'. If programmed as FIFO full, it is set when a character is transferred from the receive holding register to the receive FIFO and the transfer caused the Channel A FIFO to become full; i.e., all three FIFO positions are occupied. It is reset when the CPU reads the RHR. If a character is waiting in the receive shift register because the FIFO is full, the bit will be set again when the ISR[0] and IMR waiting character is loaded into the FIFO.

ISR[0] – Channel A Transmitter Ready
This bit is a duplicate of TxRDYA (SRA[2]).

IMR – Interrupt Mask Register

The programming of this register selects which bits in the ISR causes an interrupt output. If a bit in the ISR is a '1' and the corresponding bit in the IMR is also a '1' the INTRN output will be asserted. If the corresponding bit in the IMR is a zero, the state of the bit in the ISR has no effect on the INTRN output. Note that the IMR does not mask the programmable interrupt outputs OP3–OP7 or the reading of the ISR.

CTUR and CTLR – Counter/Timer Registers

The CTUR and CTLR hold the eight MSBs and eight LSBs, respectively, of the value to be used by the counter/timer in either the counter or timer modes of operation. The minimum value which may be loaded into the CTUR/CTLR registers is 0x0002. Note that these registers are write-only and cannot be read by the CPU.

In the timer (programmable divider) mode, the CT generates a square wave with a period of twice the value (in clock periods) of the CTUR and CTLR.

If the value in CTUR and CTLR is changed, the current half-period will not be affected, but subsequent half periods will be. In this mode the C/T runs continuously. Receipt of a start counter command (read with A3-A0 = 1110) causes the counter to terminate the current timing cycle and to begin a new cycle using the values in CTUR and CTLR. The waveform so generated is often used for a data clock. The formula for calculating the divisor n to load to the CTUR and CTLR for a particular 1× data clock is shown below:

$$n = \frac{\text{counter clock frequency}}{16 \times 2 \times \text{baud rate desired}}$$

Often this division will result in a non-integer number; 26.3, for example. One can only program integer numbers in a digital divider. Therefore, 26 would be chosen. This gives a baud rate error of 0.3/26.3 which is 1.14%; well within the ability asynchronous mode of operation.

One should be cautious about the assumed benign effects of small errors since the other receiver or transmitter with which one is communicating may also have a small error in the precise baud rate. In a 'clean' communications environment using one start bit, eight data bits and one stop bit the total difference allowed between the transmitter and receiver frequency is approximately 4.6%. Less than eight data bits will increase this percentage.

The counter ready status bit (ISR[3]) is set once each cycle of the square wave. The bit is reset by a stop counter command (read with A3-A0 = 1111). The command however, does not stop the C/T. The generated square wave is output on OP3 if it is programmed to be the C/T output.

On power up and after reset the timer/counter comes up stopped and in the timer mode. It will require a start counter command (a read at address 0xE) to start it. Because it cannot be shut off or stopped once started, and runs continuously in timer mode, it is recommended that at initialization, the output port (OP3) should be

勝 特 力 材 料 886-3-5753170
胜特力电子(上海) 86-21-54151736
胜特力电子(深圳) 86-755-83298787
Http://www.100y.com.tw

masked off through the OPCR[3:2] = 00 until the T/C is programmed to the desired operational state.

In the counter mode, the C/T counts down the number of pulses loaded into CTUR and CTLR by the CPU. Counting begins upon receipt of a counter command. Upon reaching terminal count (0x0000), the counter ready interrupt bit (ISR[3]) is set. The counter continues counting past the terminal count until stopped by the CPU. If OP3 is programmed to be the output of the C/T, the output remains HIGH until terminal count is reached, at which time it goes LOW. The output returns to the HIGH state and ISR[3] is cleared when the counter is stopped by a stop counter command. The CPU may change the values of CTUR and CTLR at any time, but the new count becomes effective only on the next start counter command. If new values have not been loaded, the previous count values are preserved and used for the next count cycle.

In the counter mode, the current value of the upper and lower 8 bits of the counter (CTU, CTL) may be read by the CPU.

It is recommended that the counter be stopped when reading to prevent potential problems which may occur if a carry from the lower 8 bits to the upper 8 bits occurs between the times that both halves of the counter are read. However, note that a subsequent start counter command will cause the counter to begin a new count cycle using the values in CTUR and CTLR.

Output Port Notes

The output ports are controlled from three places: the OPCR register, the OPR register, and the MR registers. The default source of data for the OP[7:0] pins is the OPR register. When the OPR is the source for the OP pins, the pins will drive the complement (inverse) of data in the OPR register.

The OPCR register, the MR register, and the Command register control the data source for the OP pins. It is this 'multi-source' feature of the OP pins that allows them to give the 485 turn-around RTS, DMA, interrupt and various other internal clock signals.

The OPCR controls the source of the data for the output ports OP2 through OP7. The data source for output ports OP0 and OP1 is controlled by the MR and CR registers. When the OPR is the source of the data for the output ports, the data at the ports is inverted from that in the OPR register.

The content of the OPR register is controlled by the Set and Reset Output Port Bits 'Commands'. These commands are actually the addresses at 0xE and 0xF, respectively. When these commands are used, action takes place only at the bit locations where ones exist on the data bus. For example, a one in bit location 5 of the data word used with the 'Set Output Port Bits' command will result in OPR[5] being set to one. The OP[5] pin would then drive a logical zero (V_{SS}). Similarly, a one in bit position 5 of the data word associated with the 'Reset Output Ports Bits' command would set OPR[5] to zero, and hence, the pin OP[5] will drive to a one (V_{DD}).

The use of two register locations to control the OPR relieves the software from the burden of keeping a copy of the OPR settings and thus facilitates a bit type manipulation of the individual bits. This is the same reasoning used in the lower four bits of the command register where the Rx and Tx enabling is controlled.

勝 特 力 材 料 886-3-5753170
胜特力电子(上海) 86-21-54151736
胜特力电子(深圳) 86-755-83298787
Http://www.100y.com.tw

The CTS, RTS, CTS Enable Tx signals

CTS (Clear To Send) is usually meant to be a signal to the transmitter meaning that it may transmit data to the receiver. The CTS input is on pin IP0 for TxA and on IP1 for TxB. The CTS signal is active LOW; thus, it is called CTSAN for TxA and CTSBN for TxB.

RTS is usually meant to be a signal from the receiver indicating that the receiver is ready to receive data. It is also active LOW and is, thus, called RTSAN for RxA and RTSBN for RxB. RTSAN is on pin op0 and RTSBN is on OP1. A receiver's RTS output will usually be connected to the CTS input of the associated transmitter. Therefore, one could say that RTS and CTS are different ends of the same wire!

MR2(4) is the bit that allows the transmitter to be controlled by the CTS pin (IP0 or IP1). When this bit is set to one AND the CTS input is driven HIGH, the transmitter will stop sending data at the end of the present character being serialized. It is usually the RTS output of the receiver that will be connected to the transmitter's CTS input. The receiver will set RTS HIGH when the receiver FIFO is full AND the start bit of the fourth character is sensed. Transmission then stops with four valid characters in the receiver. When MR2(4) is set to one, CTSN must be at zero for the transmitter to operate. If MR2(4) is set to zero, the IP pin will have no effect on the operation of the transmitter.

MR1(7) is the bit that allows the receiver to control OP0. When OP0 (or OP1) is controlled by the receiver, the meaning of that pin will be RTS. However, a point of confusion arises in that OP0 (or OP1) may also be controlled by the transmitter. When the transmitter is controlling this pin, its meaning is not RTS at all. It is, rather, that the transmitter has finished sending its last data byte. Programming the OP0 or OP1 pin to be controlled by the receiver and the transmitter at the same time is allowed, but would usually be incompatible.

RTS is expressed at the OP0 or OP1 pin which is still an output port. Therefore, the state of OP0 or OP1 should be set LOW for the receiver to generate the proper RTS signal. The logic at the output is basically a NAND of the OPR register and the RTS signal as generated by the receiver. When the RTS flow control is selected via the MR(7) bit state of the OPR register is not changed. Terminating the use of "Flow Control" (via the MR registers) will return the OP0 or OP1 pins to the control of the OPR register.

Transmitter Disable Note

The sequence of instructions enable transmitter — load transmit holding register — disable transmitter will result in nothing being sent if the time between the end of loading the transmit holding register and the disable command is less that 3/16 bit time in the 16x mode or one bit time in the 1x mode. Also, if the transmitter, while in the enabled state and underrun condition, is immediately disabled after a single character is loaded to the transmit holding register, that character will not be sent.

In general, when it is desired to disable the transmitter before the last character is sent AND the TxEMT bit is set in the status register (TxEMT is always set if the transmitter has underrun or has just been enabled), be sure the TxRDY bit is active immediately before issuing the transmitter disable instruction. TxRDY sets at the end of the "start bit" time. It is during the start bit that the data in the transmit holding register is transferred to the transmit shift register.

Non-standard baud rates are available as shown in Table 5 below, via the BRG Test function.

Table 5. Baud Rates Extended

CSR[7:4]	Normal BRG		BRG Extended Rates	
	ACR[7] = 0	ACR[7] = 1	ACR[7] = 0	ACR[7] = 1
0000	50	75	4,800	7,200
0001	110	110	880	880
0010	134.5	134.5	1,076	1,076
0011	200	150	19.2 k	14.4 k
0100	300	300	28.8 k	28.8 k
0101	600	600	57.6 k	57.6 k
0110	1,200	1,200	115.2 k	115.2 k
0111	1,050	2,000	1,050	2,000
1000	2,400	2,400	57.6 k	57.6 k
1001	4,800	4,800	4,800	4,800
1010	7,200	1,800	57.6 k	14.4 k
1011	9,600	9,600	9,600	9,600
1100	38.4 k	19.2 k	38.4 k	19.2 k
1101	Timer	Timer	Timer	Timer
1110	I/O2 – 16×	I/O2 – 16×	I/O2 – 16×	I/O2 – 16×
1111	I/O2 – 1×	I/O2 – 1×	I/O2 – 1×	I/O2 – 1×

NOTE: Each read on address H‘2’ will toggle the baud rate test mode. When in the BRG test mode, the baud rates change as shown to the left. This change affects all receivers and transmitters on the DUART. See *“Extended baud rates for SCN2681, SCN68681, SCC2691, SCC2692, SCC68692 and SCC2698B”* in application notes elsewhere in this publication.

The test mode at address H‘A’ changes all transmitters and receivers to the 1× mode and connects the output ports to some internal nodes.

Receiver Reset in the Normal Mode (Receiver Enabled)

Reset can be accomplished easily by issuing a receiver software or hardware reset followed by a receiver enable. All receiver data, status and programming will be preserved and available before reset. The reset will NOT affect the programming.

Receiver Reset in the Wake-Up Mode (MR1[4:3] = 11)

Reset can also be accomplished easily by first exiting the wake-up mode (MR1[4:3] = 00 or 01 or 10), then issuing a receiver software or hardware reset followed by a wake-up re-entry (MR1[4:3] = 11). All receiver data, status and programming will be preserved and available before reset. The reset will NOT affect other programming.

The reason for this is the receiver is partially enabled when the parity bits are at ‘11’. Thus the receiver disable and reset is bypassed by the partial enabling of the receiver.

SD00097

勝 特 力 材 料 886-3-5753170
胜特力电子(上海) 86-21-54151736
胜特力电子(深圳) 86-755-83298787
Http://www.100y.com.tw

勝 特 力 材 料 886-3-5753170
胜特力电子(上海) 86-21-54151736
胜特力电子(深圳) 86-755-83298787
Http://www.100y.com.tw

TIMING DIAGRAMS

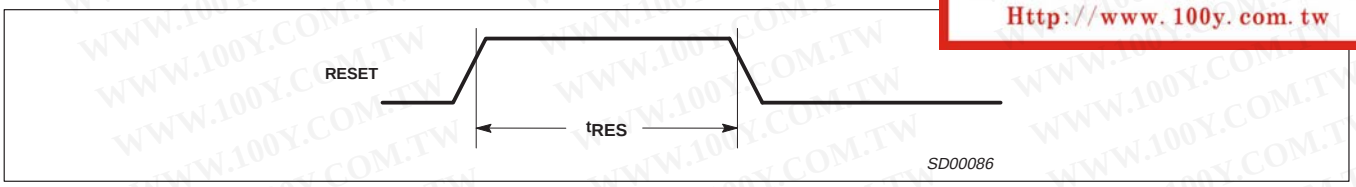

Figure 3. Reset Timing

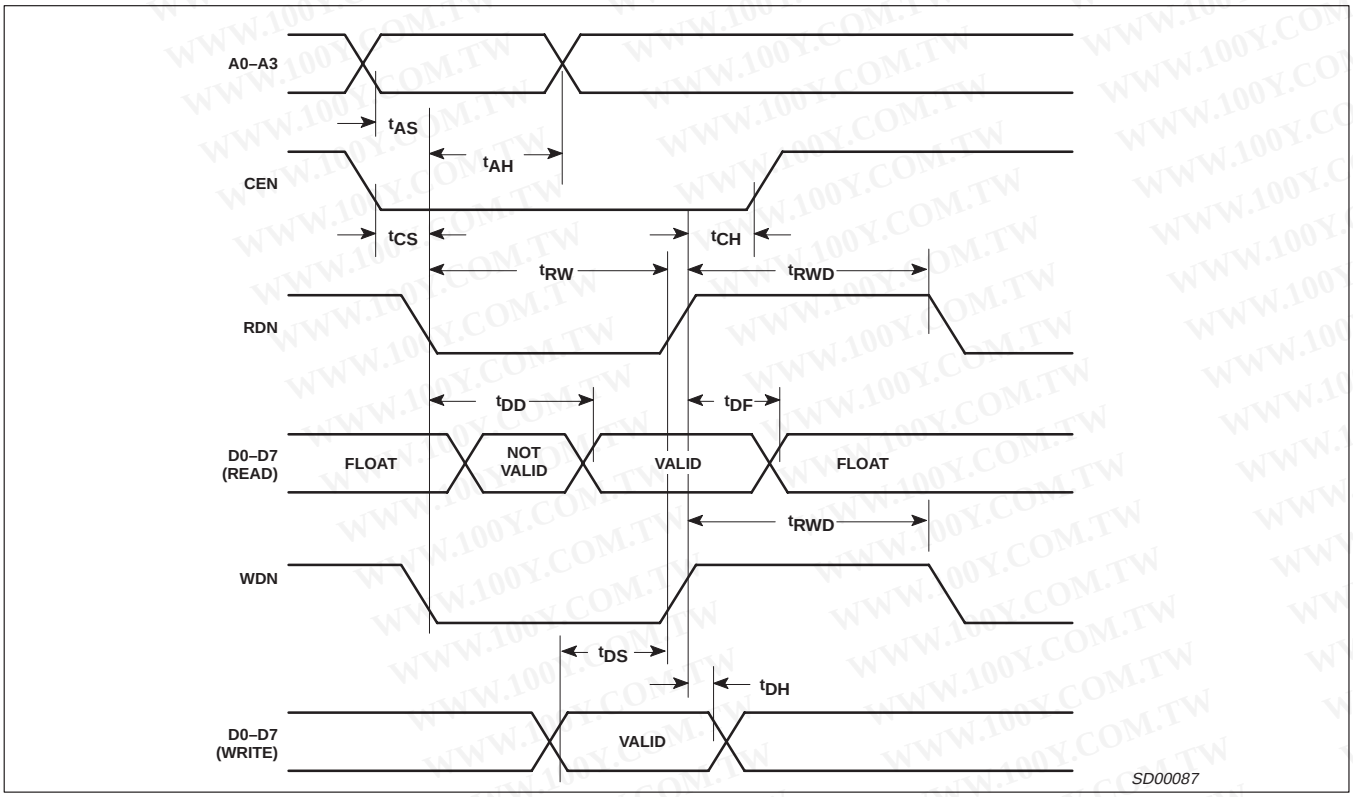

Figure 4. Bus Timing

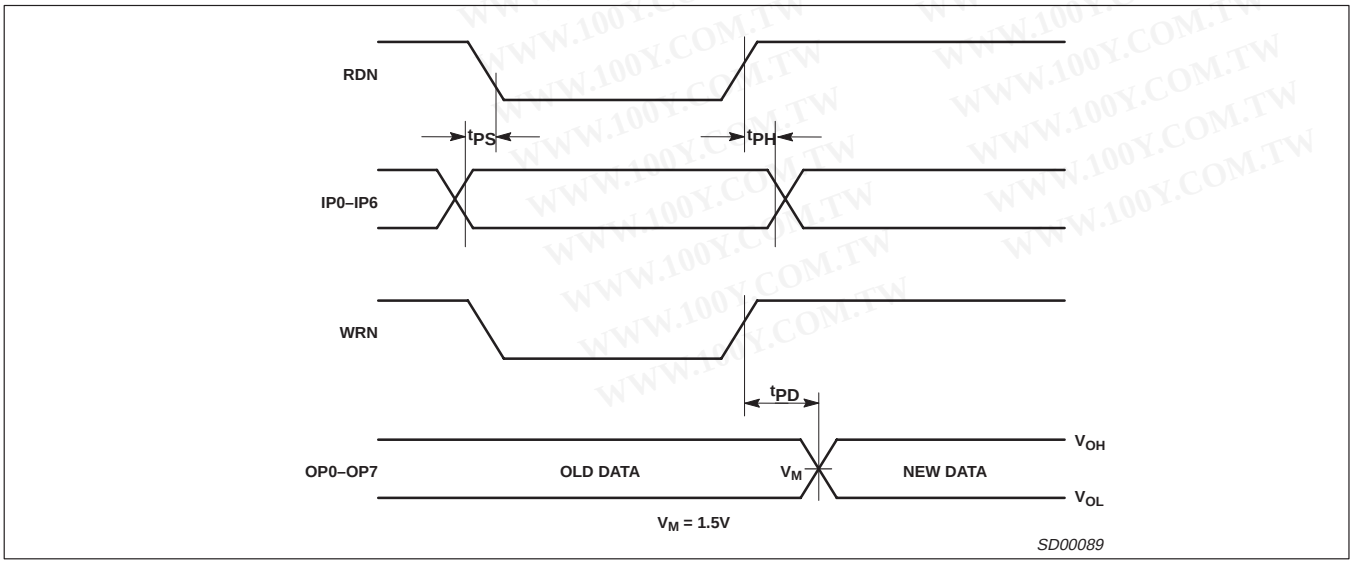

Figure 5. Port Timing

TIMING DIAGRAMS (Continued)

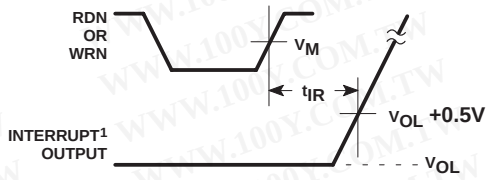

NOTES:

1. INTRN or OP3 – OP7 when used as interrupt outputs.
2. The test for open-drain outputs is intended to guarantee switching of the output transistor. Measurement of this response is referenced from themidpoint of the switching signal, V_M, to a point 0.5V above V_{OL}. This point represents noise margin that assures true switching has occurred. Beyond this level, the effects of external circuitry and test environment are pronounced and can greatly affect the resultant measurement.

SD00090

Figure 6. Interrupt Timing

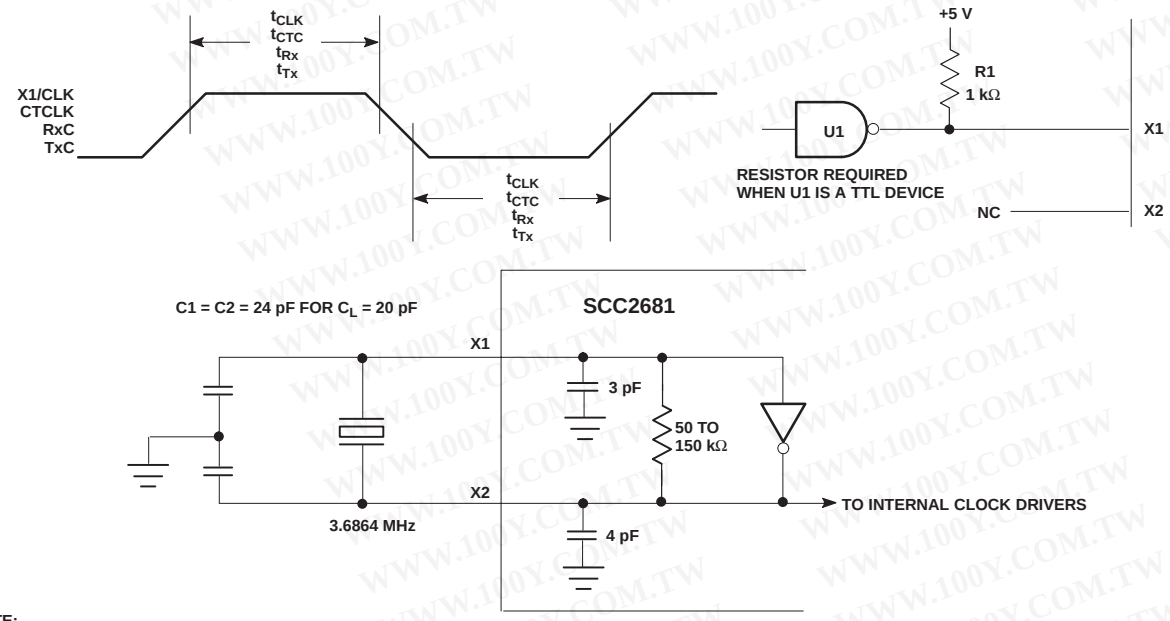

NOTE:
C1 AND C2 SHOULD BE BASED ON MANUFACTURER'S SPECIFICATION. PARASITIC CAPACITANCE SHOULD BE INCLUDED WITH C1 AND C2. R1 IS ONLY REQUIRED IF U1 WILL NOT DRIVE TO X1 INPUT LEVELS

TYPICAL CRYSTAL SPECIFICATION

FREQUENCY:	2 – 4 MHz
LOAD CAPACITANCE (C_L):	12 – 32 pF
TYPE OF OPERATION:	PARALLEL RESONANT, FUNDAMENTAL MODE

SD00724

Figure 7. Clock Timing

勝 特 力 材 料 886-3-5753170
胜特力电子(上海) 86-21-54151736
胜特力电子(深圳) 86-755-83298787
Http://www.100y.com.tw

勝 特 力 材 料 886-3-5753170
胜特力电子(上海) 86-21-54151736
胜特力电子(深圳) 86-755-83298787
Http://www.100y.com.tw

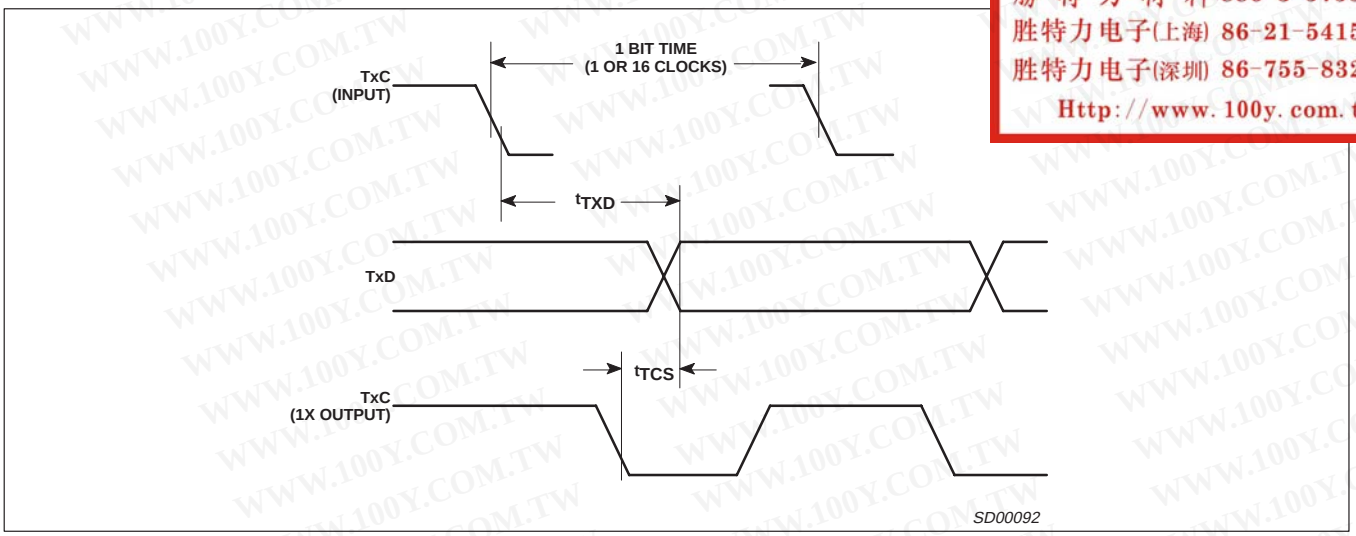

Figure 8. Transmit

TIMING DIAGRAMS (Continued)

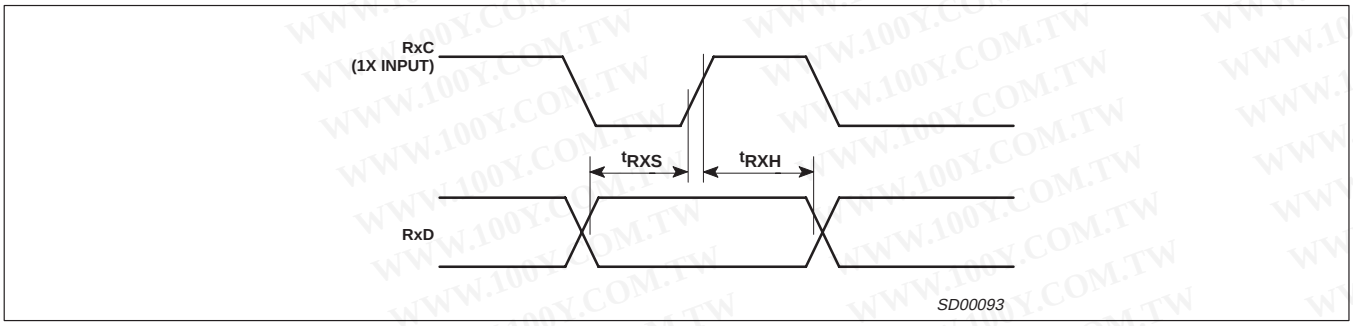

Figure 9. Receiver Timing

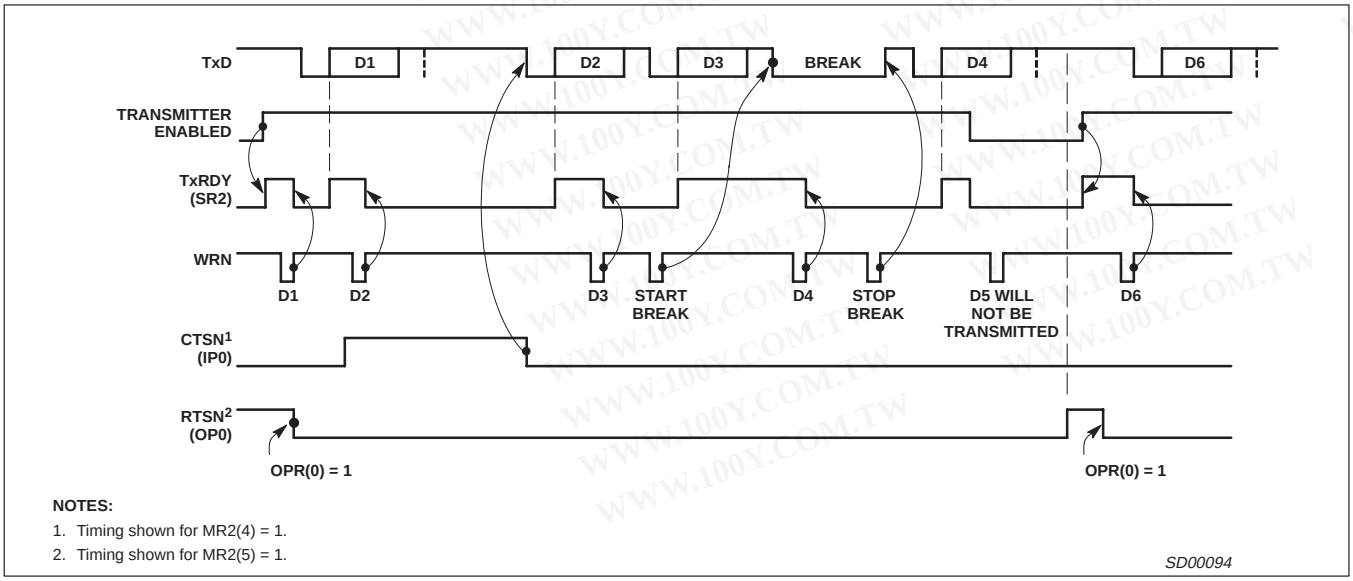

NOTES:
1. Timing shown for MR2(4) = 1.
2. Timing shown for MR2(5) = 1.

Figure 10. Transmitter Timing

TIMING DIAGRAMS (Continued)

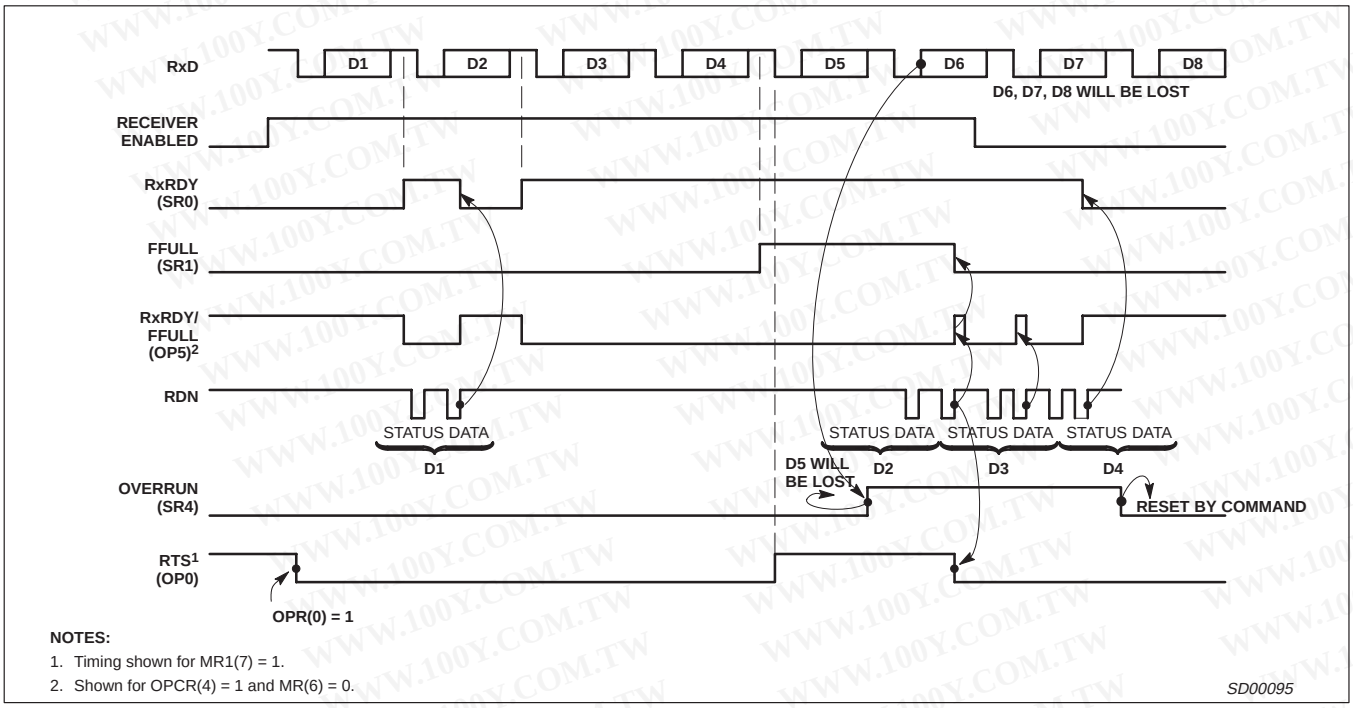

Figure 11. Receiver Timing

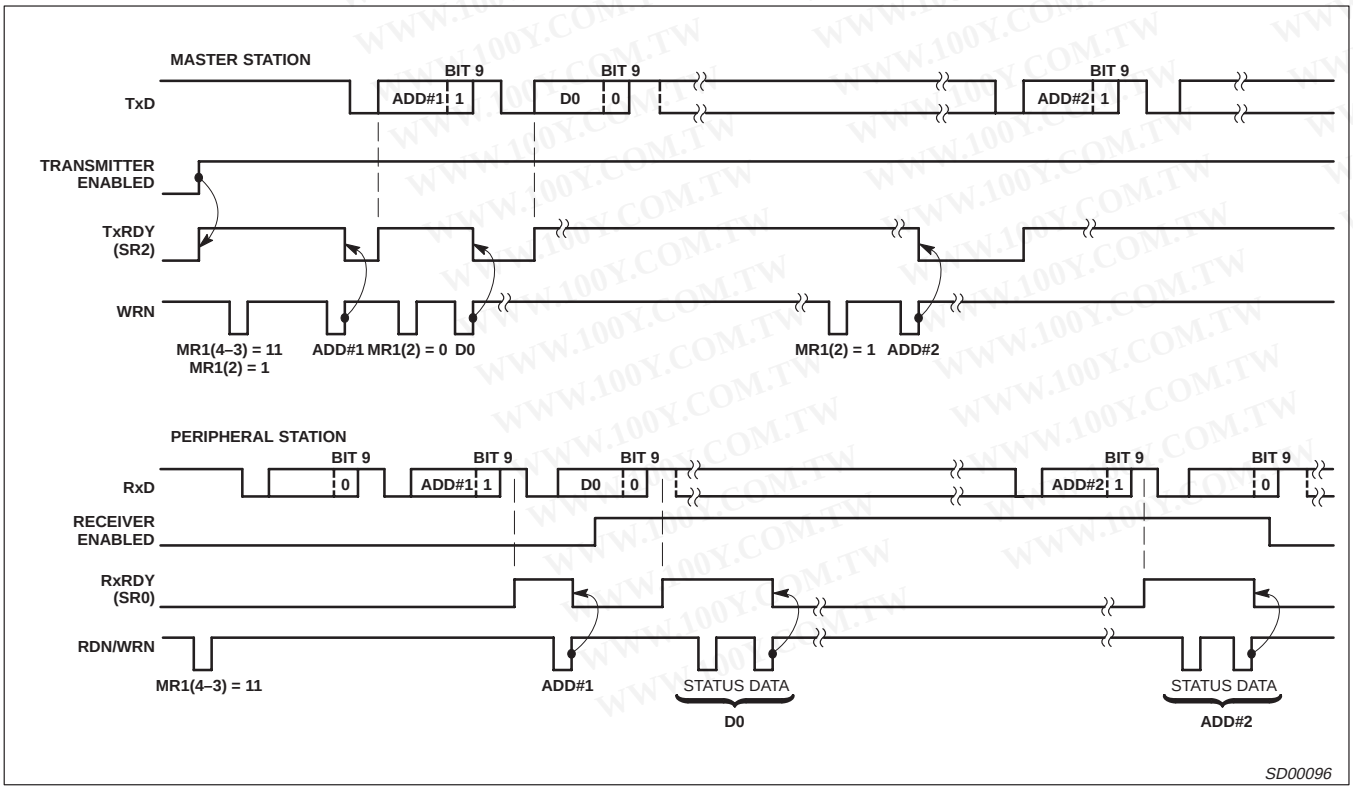

Figure 12. Wake-Up Mode

勝 特 力 材 料 886-3-5753170
胜特力电子(上海) 86-21-54151736
胜特力电子(深圳) 86-755-83298787
Http://www.100y.com.tw

DIP28: plastic dual in-line package; 28 leads (600 mil) **SOT117-1**

勝 特 力 材 料 886-3-5753170
胜特力电子(上海) 86-21-54151736
胜特力电子(深圳) 86-755-83298787
Http://www.100y.com.tw

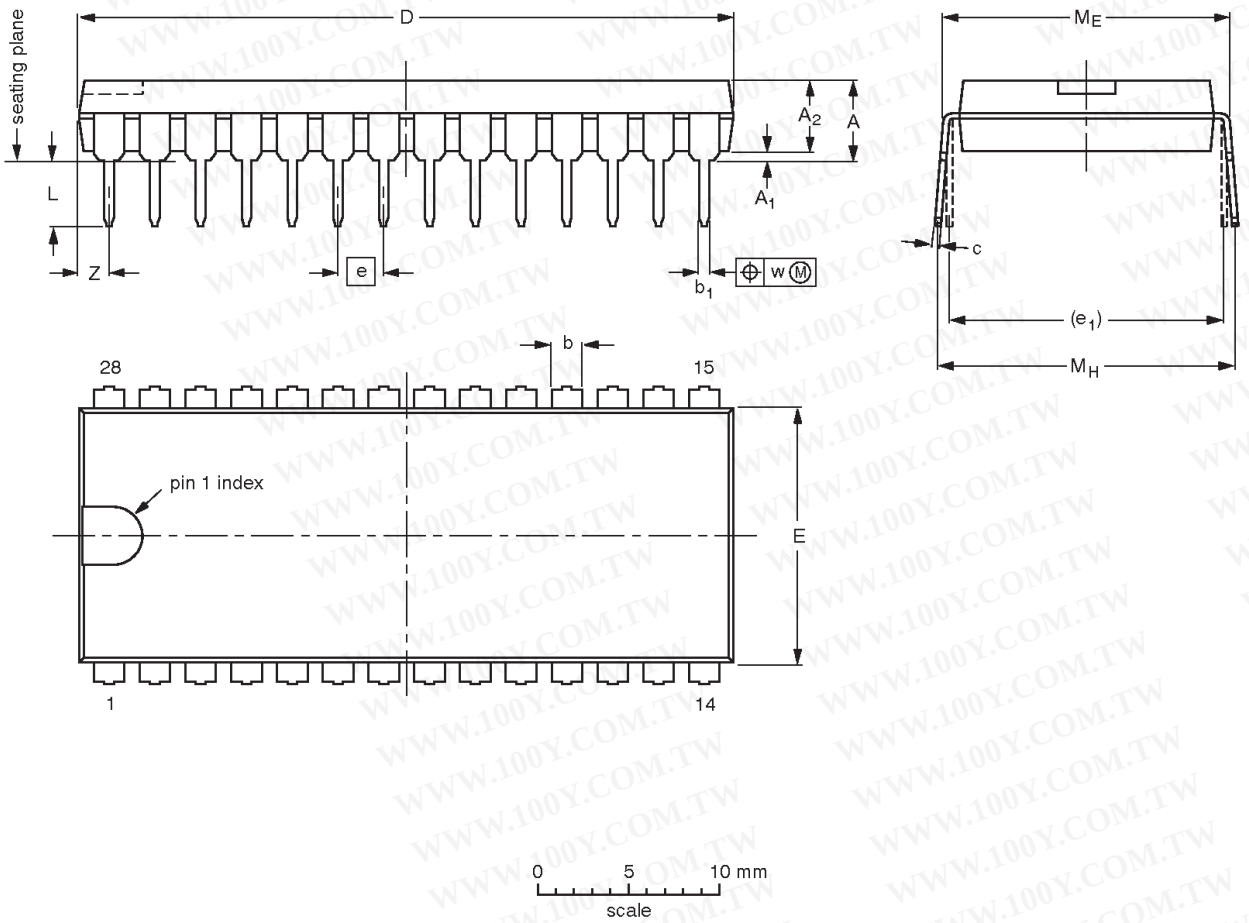

DIMENSIONS (mm dimensions are derived from the original inch dimensions)

UNIT	A max.	A_1 min.	A_2 max.	b	b_1	c	D (1)	E (1)	e	e_1	L	M_E	M_H	w	Z (1) max.
mm	5.1	0.51	4	1.7 1.3	0.53 0.38	0.32 0.23	36 35	14.1 13.7	2.54	15.24	3.9 3.4	15.80 15.24	17.15 15.90	0.25	1.7
inches	0.2	0.02	0.16	0.066 0.051	0.020 0.014	0.013 0.009	1.41 1.34	0.56 0.54	0.1	0.6	0.15 0.13	0.62 0.60	0.68 0.63	0.01	0.067

Note

1. Plastic or metal protrusions of 0.25 mm (0.01 inch) maximum per side are not included.

OUTLINE VERSION	REFERENCES				EUROPEAN PROJECTION	ISSUE DATE
	IEC	JEDEC	JEITA			
SOT117-1	051G05	MO-015	SC-510-28			~~99-12-27~~ 03-02-13

DIP40: plastic dual in-line package; 40 leads (600 mil) **SOT129-1**

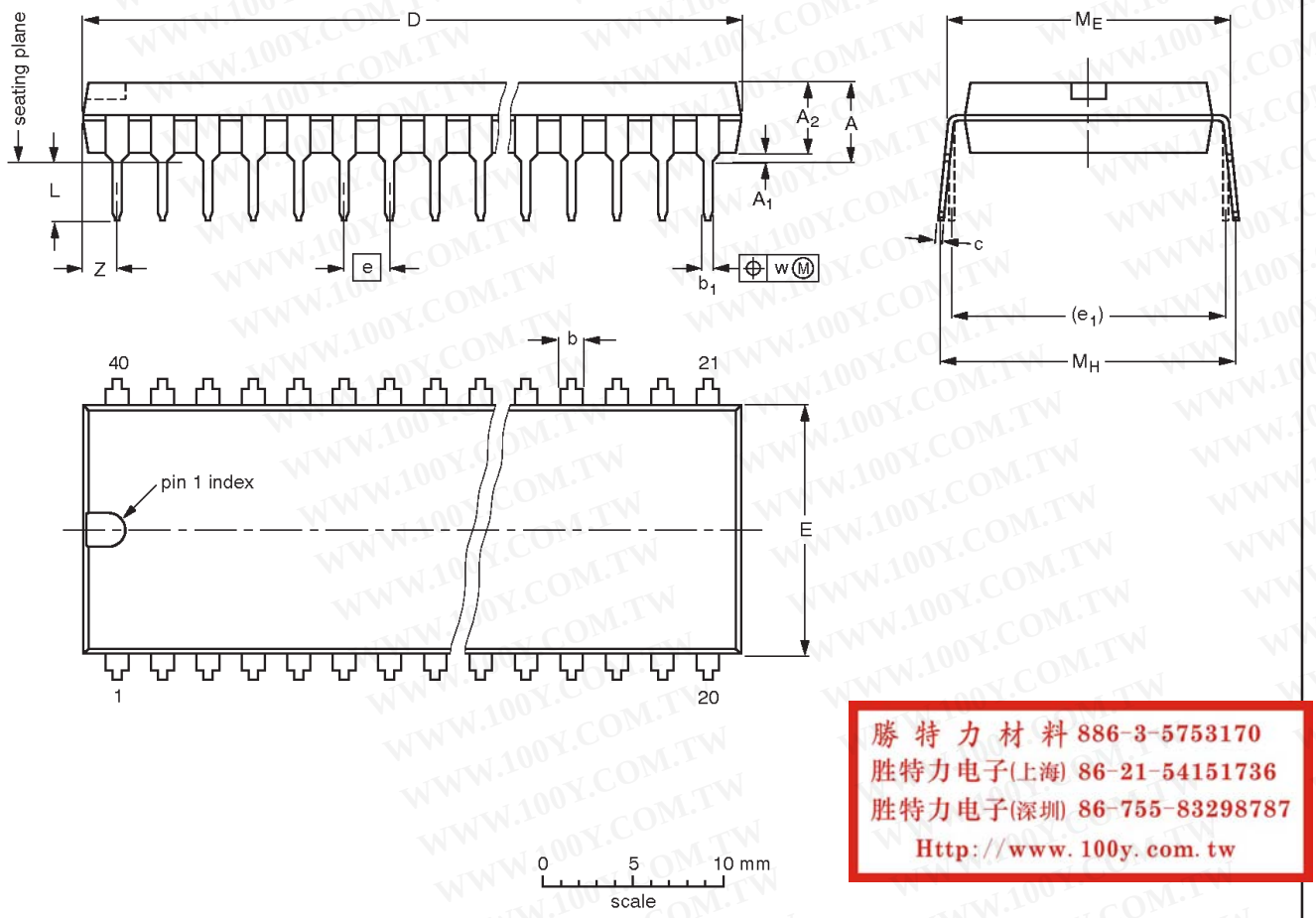

勝 特 力 材 料 886-3-5753170
胜特力电子(上海) 86-21-54151736
胜特力电子(深圳) 86-755-83298787
Http://www.100y.com.tw

DIMENSIONS (inch dimensions are derived from the original mm dimensions)

UNIT	A max.	A_1 min.	A_2 max.	b	b_1	c	D (1)	E (1)	e	e_1	L	M_E	M_H	w	Z (1) max.
mm	4.7	0.51	4	1.70 1.14	0.53 0.38	0.36 0.23	52.5 51.5	14.1 13.7	2.54	15.24	3.60 3.05	15.80 15.24	17.42 15.90	0.254	2.25
inches	0.19	0.02	0.16	0.067 0.045	0.021 0.015	0.014 0.009	2.067 2.028	0.56 0.54	0.1	0.6	0.14 0.12	0.62 0.60	0.69 0.63	0.01	0.089

Note

1. Plastic or metal protrusions of 0.25 mm (0.01 inch) maximum per side are not included.

OUTLINE VERSION	REFERENCES				EUROPEAN PROJECTION	ISSUE DATE
	IEC	JEDEC	JEITA			
SOT129-1	051G08	MO-015	SC-511-40			~~99-12-27~~ 03-02-13

勝 特 力 材 料 886-3-5753170
胜特力电子(上海) 86-21-54151736
胜特力电子(深圳) 86-755-83298787
Http://www.100y.com.tw

PLCC44: plastic leaded chip carrier; 44 leads **SOT187-2**

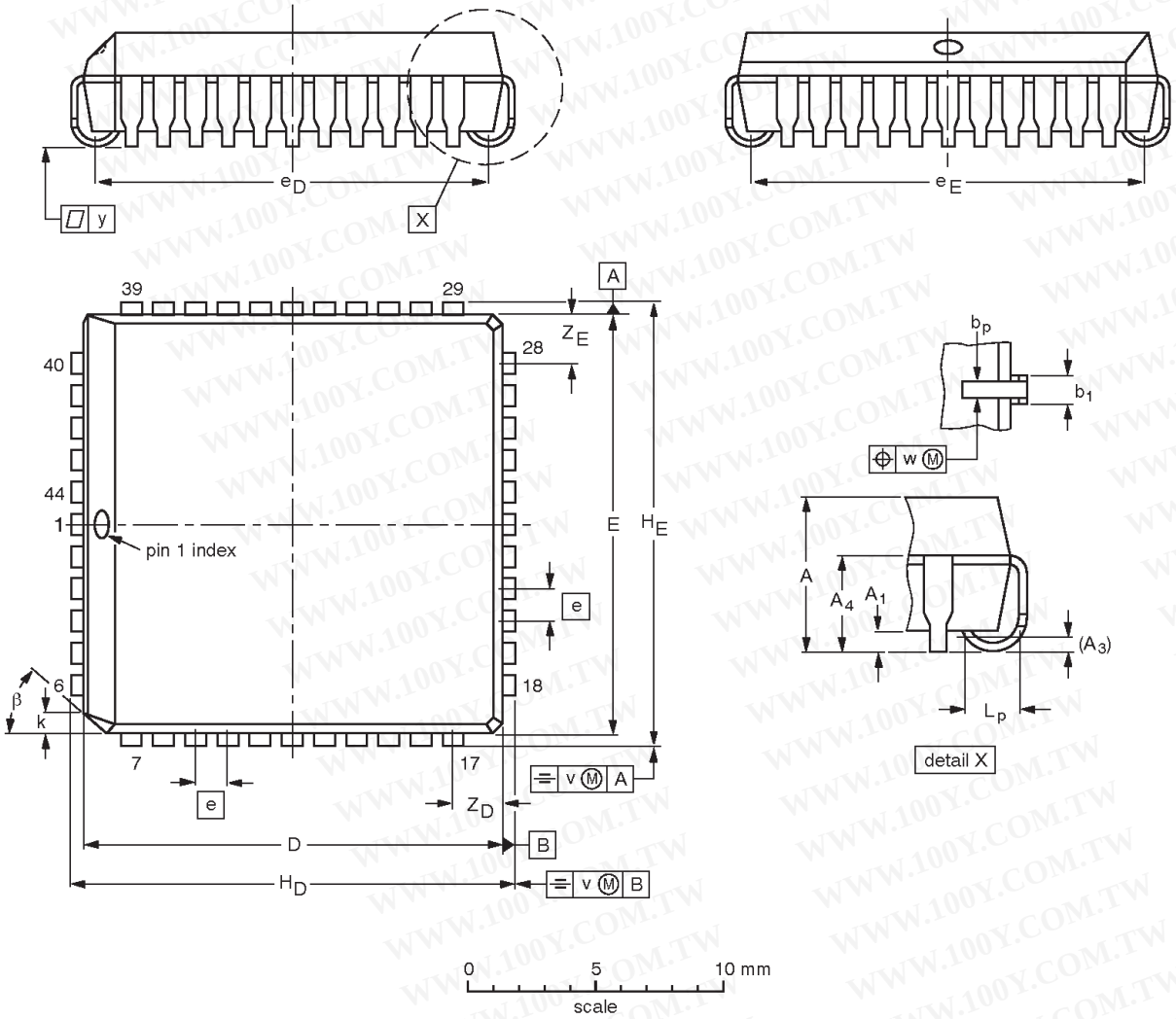

DIMENSIONS (mm dimensions are derived from the original inch dimensions)

UNIT	A	A_1 min.	A_3	A_4 max.	b_p	b_1	D(1)	E(1)	e	e_D	e_E	H_D	H_E	k	L_p	v	w	y	Z_D(1) max.	Z_E(1) max.	β
mm	4.57 4.19	0.51	0.25	3.05	0.53 0.33	0.81 0.66	16.66 16.51	16.66 16.51	1.27	16.00 14.99	16.00 14.99	17.65 17.40	17.65 17.40	1.22 1.07	1.44 1.02	0.18	0.18	0.1	2.16	2.16	45°
inches	0.180 0.165	0.02	0.01	0.12	0.021 0.013	0.032 0.026	0.656 0.650	0.656 0.650	0.05	0.63 0.59	0.63 0.59	0.695 0.685	0.695 0.685	0.048 0.042	0.057 0.040	0.007	0.007	0.004	0.085	0.085	

Note

1. Plastic or metal protrusions of 0.25 mm (0.01 inch) maximum per side are not included.

OUTLINE VERSION	REFERENCES				EUROPEAN PROJECTION	ISSUE DATE
	IEC	JEDEC	JEITA			
SOT187-2	112E10	MS-018	EDR-7319			~~99-12-27~~ 01-11-14

Dual asynchronous receiver/transmitter (DUART) SCC2681

REVISION HISTORY

Rev	Date	Description
_1	20040406	**Product data (9397 750 12075). ECN 853-2445 01-A15014 of 15 December 2003.**

勝 特 力 材 料 886-3-5753170
胜特力电子(上海) 86-21-54151736
胜特力电子(深圳) 86-755-83298787
Http://www.100y.com.tw

Data sheet status

Level	Data sheet status [1]	Product status [2] [3]	Definitions
I	Objective data	Development	This data sheet contains data from the objective specification for product development. Philips Semiconductors reserves the right to change the specification in any manner without notice.
II	Preliminary data	Qualification	This data sheet contains data from the preliminary specification. Supplementary data will be published at a later date. Philips Semiconductors reserves the right to change the specification without notice, in order to improve the design and supply the best possible product.
III	Product data	Production	This data sheet contains data from the product specification. Philips Semiconductors reserves the right to make changes at any time in order to improve the design, manufacturing and supply. Relevant changes will be communicated via a Customer Product/Process Change Notification (CPCN).

[1] Please consult the most recently issued data sheet before initiating or completing a design.

[2] The product status of the device(s) described in this data sheet may have changed since this data sheet was published. The latest information is available on the Internet at URL http://www.semiconductors.philips.com.

[3] For data sheets describing multiple type numbers, the highest-level product status determines the data sheet status.

Definitions

Short-form specification — The data in a short-form specification is extracted from a full data sheet with the same type number and title. For detailed information see the relevant data sheet or data handbook.

Limiting values definition — Limiting values given are in accordance with the Absolute Maximum Rating System (IEC 60134). Stress above one or more of the limiting values may cause permanent damage to the device. These are stress ratings only and operation of the device at these or at any other conditions above those given in the Characteristics sections of the specification is not implied. Exposure to limiting values for extended periods may affect device reliability.

Application information — Applications that are described herein for any of these products are for illustrative purposes only. Philips Semiconductors make no representation or warranty that such applications will be suitable for the specified use without further testing or modification.

Disclaimers

Life support — These products are not designed for use in life support appliances, devices, or systems where malfunction of these products can reasonably be expected to result in personal injury. Philips Semiconductors customers using or selling these products for use in such applications do so at their own risk and agree to fully indemnify Philips Semiconductors for any damages resulting from such application.

Right to make changes — Philips Semiconductors reserves the right to make changes in the products—including circuits, standard cells, and/or software—described or contained herein in order to improve design and/or performance. When the product is in full production (status 'Production'), relevant changes will be communicated via a Customer Product/Process Change Notification (CPCN). Philips Semiconductors assumes no responsibility or liability for the use of any of these products, conveys no license or title under any patent, copyright, or mask work right to these products, and makes no representations or warranties that these products are free from patent, copyright, or mask work right infringement, unless otherwise specified.

Contact information

For additional information please visit
http://www.semiconductors.philips.com. Fax: **+31 40 27 24825**

For sales offices addresses send e-mail to:
sales.addresses@www.semiconductors.philips.com.

© Koninklijke Philips Electronics N.V. 2004
All rights reserved. Printed in U.S.A.

Date of release: 04-04

Document order number: 9397 750 12075

Let's make things better.

Philips Semiconductors

PHILIPS