SN54HCT374, SN74HCT374
OCTAL EDGE-TRIGGERED D-TYPE FLIP-FLOPS WITH 3-STATE OUTPUTS

SCLS005C – MARCH 1984 – REVISED DECEMBER 2002

- **Operating Voltage Range of 4.5 V to 5.5 V**
- **High-Current 3-State True Outputs Can Drive Up To 15 LSTTL Loads**
- **Low Power Consumption, 80-μA Max I_{CC}**
- **Typical t_{pd} = 22 ns**
- **±6-mA Output Drive at 5 V**
- **Low Input Current of 1 μA Max**
- **Inputs Are TTL-Voltage Compatible**
- **Eight D-Type Flip-Flops in a Single Package**
- **Full Parallel Access for Loading**

SN54HCT374 . . . J OR W PACKAGE
SN74HCT374 . . . DB, DW, N, NS, OR PW PACKAGE
(TOP VIEW)

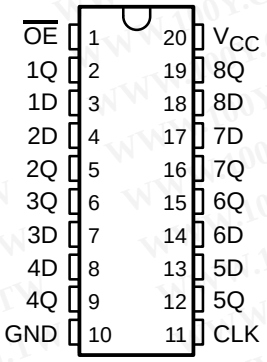

SN54HCT374 . . . FK PACKAGE
(TOP VIEW)

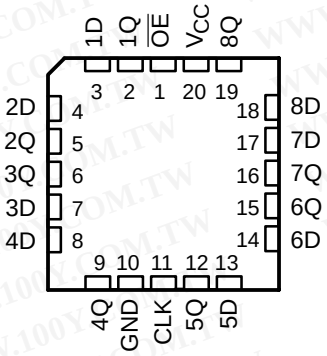

description/ordering information

These 8-bit flip-flops feature 3-state outputs designed specifically for driving highly capacitive or relatively low-impedance loads. They are particularly suitable for implementing buffer registers, I/O ports, bidirectional bus drivers, and working registers.

The eight flip-flops of the ’HCT374 devices are edge-triggered D-type flip-flops. On the positive transition of the clock (CLK) input, the Q outputs are set to the logic levels that were set up at the data (D) inputs.

An output-enable ($\overline{OE}$) input places the eight outputs in either a normal logic state (high or low logic levels) or the high-impedance state. In the high-impedance state, the outputs neither load nor drive the bus lines significantly. The high-impedance state and increased drive provide the capability to drive bus lines without interface or pullup components.

$\overline{OE}$ does not affect the internal operations of the flip-flops. Old data can be retained or new data can be entered while the outputs are in the high-impedance state.

ORDERING INFORMATION

T_A	PACKAGE†		ORDERABLE PART NUMBER	TOP-SIDE MARKING
–40°C to 85°C	PDIP – N	Tube	SN74HCT374N	SN74HCT374N
	SOIC – DW	Tube	SN74HCT374DW	HCT374
		Tape and reel	SN74HCT374DWR	
	SOP – NS	Tape and reel	SN74HCT374NSR	HCT374
	SSOP – DB	Tape and reel	SN74HCT374DBR	HT374
	TSSOP – PW	Tape and reel	SN74HCT374PWR	HT374
–55°C to 125°C	CDIP – J	Tube	SNJ54HCT374J	SNJ54HCT374J
	CFP – W	Tube	SNJ54HCT374W	SNJ54HCT374W
	LCCC – FK	Tube	SNJ54HCT374FK	SNJ54HCT374FK

† Package drawings, standard packing quantities, thermal data, symbolization, and PCB design guidelines are available at www.ti.com/sc/package.

FUNCTION TABLE
(each flip-flop)

INPUTS			OUTPUT
$\overline{OE}$	CLK	D	Q
L	↑	H	H
L	↑	L	L
L	H or L	X	Q_0
H	X	X	Z

logic diagram (positive logic)

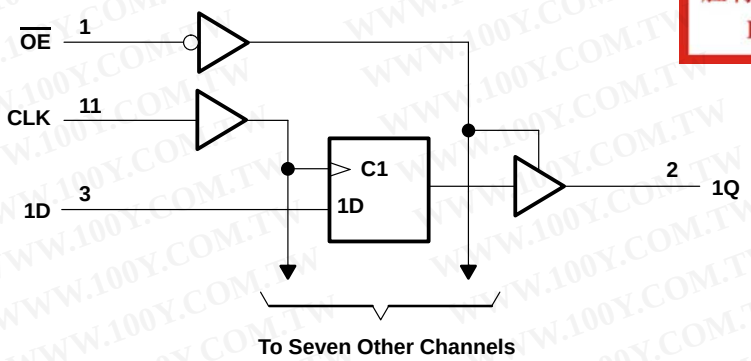

absolute maximum ratings over operating free-air temperature range (unless otherwise noted)†

Supply voltage range, V_{CC}		–0.5 V to 7 V
Input clamp current, I_{IK} ($V_I < 0$ or $V_I > V_{CC}$) (see Note 1)		±20 mA
Output clamp current, I_{OK} ($V_O < 0$ or $V_O > V_{CC}$) (see Note 1)		±20 mA
Continuous output current, I_O ($V_O = 0$ to V_{CC})		±35 mA
Continuous current through V_{CC} or GND		±70 mA
Package thermal impedance, θ_{JA} (see Note 2):	DB package	70°C/W
	DW package	58°C/W
	N package	69°C/W
	NS package	60°C/W
	PW package	83°C/W
Storage temperature range, T_{stg}		–65°C to 150°C

† Stresses beyond those listed under “absolute maximum ratings” may cause permanent damage to the device. These are stress ratings only, and functional operation of the device at these or any other conditions beyond those indicated under “recommended operating conditions” is not implied. Exposure to absolute-maximum-rated conditions for extended periods may affect device reliability.

NOTES: 1. The input and output voltage ratings may be exceeded if the input and output current ratings are observed.
2. The package thermal impedance is calculated in accordance with JESD 51-7.

recommended operating conditions (see Note 3)

			SN54HCT374			SN74HCT374			UNIT
			MIN	NOM	MAX	MIN	NOM	MAX	
V_{CC}	Supply voltage		4.5	5	5.5	4.5	5	5.5	V
V_{IH}	High-level input voltage	V_{CC} = 4.5 V to 5.5 V	2			2			V
V_{IL}	Low-level input voltage	V_{CC} = 4.5 V to 5.5 V			0.8			0.8	V
V_I	Input voltage		0		V_{CC}	0		V_{CC}	V
V_O	Output voltage		0		V_{CC}	0		V_{CC}	V
$\Delta t/\Delta v$	Input transition rise/fall time				500			500	ns
T_A	Operating free-air temperature		–55		125	–40		85	°C

NOTE 3: All unused inputs of the device must be held at V_{CC} or GND to ensure proper device operation. Refer to the TI application report, *Implications of Slow or Floating CMOS Inputs*, literature number SCBA004.

electrical characteristics over recommended operating free-air temperature range (unless otherwise noted)

PARAMETER	TEST CONDITIONS		V_{CC}	T_A = 25°C			SN54HCT374		SN74HCT374		UNIT
				MIN	TYP	MAX	MIN	MAX	MIN	MAX	
V_{OH}	$V_I = V_{IH}$ or V_{IL}	I_{OH} = –20 µA	4.5 V	4.4	4.499		4.4		4.4		V
		I_{OH} = –6 mA		3.98	4.3		3.7		3.84		
V_{OL}	$V_I = V_{IH}$ or V_{IL}	I_{OL} = 20 µA	4.5 V		0.001	0.1		0.1		0.1	V
		I_{OL} = 6 mA			0.17	0.26		0.4		0.33	
I_I	$V_I = V_{CC}$ or 0		5.5 V		±0.1	±100		±1000		±1000	nA
I_{OZ}	$V_O = V_{CC}$ or 0		5.5 V		±0.01	±0.5		±10		±5	µA
I_{CC}	$V_I = V_{CC}$ or 0,	I_O = 0	5.5 V			8		160		80	µA
ΔI_{CC}†	One input at 0.5 V or 2.4 V, Other inputs at 0 or V_{CC}		5.5 V		1.4	2.4		3		2.9	mA
C_i			4.5 V to 5.5 V		3	10		10		10	pF

† This is the increase in supply current for each input that is at one of the specified TTL voltage levels, rather than 0 V or V_{CC}.

timing requirements over recommended operating free-air temperature range (unless otherwise noted)

		V_{CC}	T_A = 25°C		SN54HCT374		SN74HCT374		UNIT
			MIN	MAX	MIN	MAX	MIN	MAX	
f_{clock}	Clock frequency	4.5 V		31		21		25	MHz
		5.5 V		36		23		28	
t_w	Pulse duration, CLK high or low	4.5 V	16		24		20		ns
		5.5 V	14		22		18		
t_{su}	Setup time, data before CLK↑	4.5 V	20		30		25		ns
		5.5 V	17		27		23		
t_h	Hold time, data after CLK↑	4.5 V	10		10		10		ns
		5.5 V	10		10		10		

switching characteristics over recommended operating free-air temperature range, C_L = 50 pF (unless otherwise noted) (see Figure 1)

PARAMETER	FROM (INPUT)	TO (OUTPUT)	V_{CC}	T_A = 25°C			SN54HCT374		SN74HCT374		UNIT
				MIN	TYP	MAX	MIN	MAX	MIN	MAX	
f_{max}			4.5 V	31	36		21		25		MHz
			5.5 V	36	40		23		28		
t_{pd}	CLK	Any Q	4.5 V		30	36		54		45	ns
			5.5 V		25	32		49		41	
t_{en}	$\overline{OE}$	Any Q	4.5 V		26	30		45		38	ns
			5.5 V		23	27		41		34	
t_{dis}	$\overline{OE}$	Any Q	4.5 V		23	30		45		38	ns
			5.5 V		22	27		41		34	
t_t		Any Q	4.5 V		10	12		18		15	ns
			5.5 V		9	11		16		14	

switching characteristics over recommended operating free-air temperature range, C_L = 150 pF (unless otherwise noted) (see Figure 1)

PARAMETER	FROM (INPUT)	TO (OUTPUT)	V_{CC}	T_A = 25°C			SN54HCT374		SN74HCT374		UNIT
				MIN	TYP	MAX	MIN	MAX	MIN	MAX	
t_{pd}	CLK	Any Q	4.5 V		40	46		69		58	ns
			5.5 V		35	41		62		52	
t_{en}	$\overline{OE}$	Any Q	4.5 V		34	40		60		50	ns
			5.5 V		29	36		54		45	
t_t		Any Q	4.5 V		18	42		63		53	ns
			5.5 V		16	38		57		48	

operating characteristics, T_A = 25°C

PARAMETER		TEST CONDITIONS	TYP	UNIT
C_{pd}	Power dissipation capacitance per flip-flop	No load	85	pF

PARAMETER MEASUREMENT INFORMATION

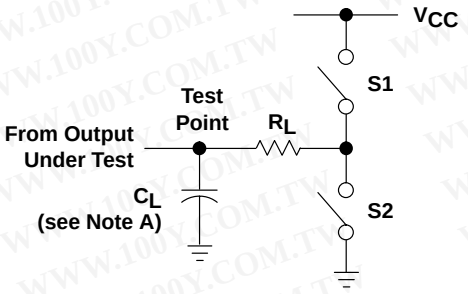

LOAD CIRCUIT

PARAMETER		R_L	C_L	S1	S2
t_{en}	t_{PZH}	1 kΩ	50 pF or 150 pF	Open	Closed
	t_{PZL}			Closed	Open
t_{dis}	t_{PHZ}	1 kΩ	50 pF	Open	Closed
	t_{PLZ}			Closed	Open
t_{pd} or t_t		––	50 pF or 150 pF	Open	Open

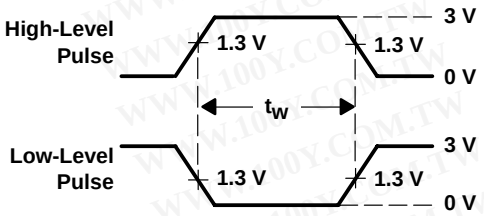

VOLTAGE WAVEFORMS
PULSE DURATIONS

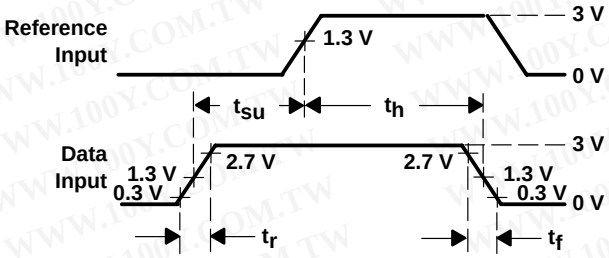

VOLTAGE WAVEFORMS
SETUP AND HOLD AND INPUT RISE AND FALL TIMES

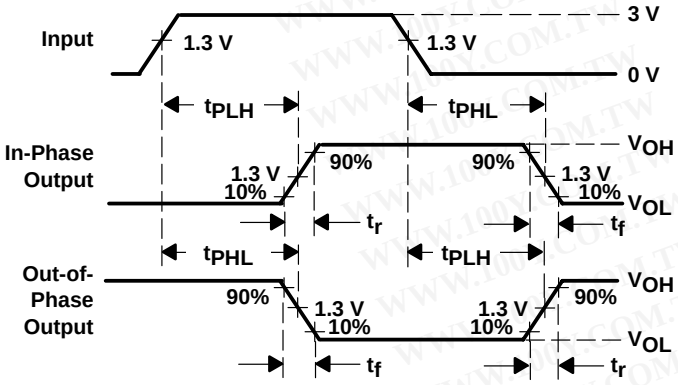

VOLTAGE WAVEFORMS
PROPAGATION DELAY AND OUTPUT RISE AND FALL TIMES

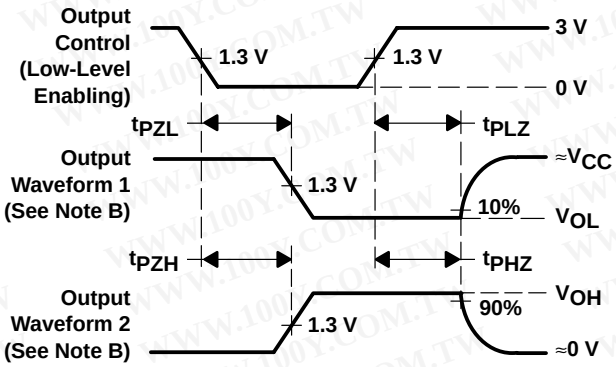

VOLTAGE WAVEFORMS
ENABLE AND DISABLE TIMES FOR 3-STATE OUTPUTS

NOTES:
A. C_L includes probe and test-fixture capacitance.
B. Waveform 1 is for an output with internal conditions such that the output is low except when disabled by the output control. Waveform 2 is for an output with internal conditions such that the output is high except when disabled by the output control.
C. Phase relationships between waveforms were chosen arbitrarily. All input pulses are supplied by generators having the following characteristics: PRR ≤ 1 MHz, Z_O = 50 Ω, t_r = 6 ns, t_f = 6 ns.
D. For clock inputs, f_{max} is measured when the input duty cycle is 50%.
E. The outputs are measured one at a time with one input transition per measurement.
F. t_{PLZ} and t_{PHZ} are the same as t_{dis}.
G. t_{PZL} and t_{PZH} are the same as t_{en}.
H. t_{PLH} and t_{PHL} are the same as t_{pd}.

Figure 1. Load Circuit and Voltage Waveforms

IMPORTANT NOTICE

Texas Instruments Incorporated and its subsidiaries (TI) reserve the right to make corrections, modifications, enhancements, improvements, and other changes to its products and services at any time and to discontinue any product or service without notice. Customers should obtain the latest relevant information before placing orders and should verify that such information is current and complete. All products are sold subject to TI's terms and conditions of sale supplied at the time of order acknowledgment.

TI warrants performance of its hardware products to the specifications applicable at the time of sale in accordance with TI's standard warranty. Testing and other quality control techniques are used to the extent TI deems necessary to support this warranty. Except where mandated by government requirements, testing of all parameters of each product is not necessarily performed.

TI assumes no liability for applications assistance or customer product design. Customers are responsible for their products and applications using TI components. To minimize the risks associated with customer products and applications, customers should provide adequate design and operating safeguards.

TI does not warrant or represent that any license, either express or implied, is granted under any TI patent right, copyright, mask work right, or other TI intellectual property right relating to any combination, machine, or process in which TI products or services are used. Information published by TI regarding third–party products or services does not constitute a license from TI to use such products or services or a warranty or endorsement thereof. Use of such information may require a license from a third party under the patents or other intellectual property of the third party, or a license from TI under the patents or other intellectual property of TI.

Reproduction of information in TI data books or data sheets is permissible only if reproduction is without alteration and is accompanied by all associated warranties, conditions, limitations, and notices. Reproduction of this information with alteration is an unfair and deceptive business practice. TI is not responsible or liable for such altered documentation.

Resale of TI products or services with statements different from or beyond the parameters stated by TI for that product or service voids all express and any implied warranties for the associated TI product or service and is an unfair and deceptive business practice. TI is not responsible or liable for any such statements.

Mailing Address:

Texas Instruments
Post Office Box 655303
Dallas, Texas 75265