SDFS039A – MARCH 1987 – REVISED OCTOBER 1993

- **Package Options Include Plastic Small-Outline Packages, Ceramic Chip Carriers, and Standard Plastic and Ceramic 300-mil DIPs**

description

These devices contain three independent 3-input NAND gates. They perform the Boolean functions $Y = \overline{A \bullet B \bullet C}$ or $Y = \overline{A} + \overline{B} + \overline{C}$ in positive logic.

The SN54F10 is characterized for operation over the full military temperature range of –55°C to 125°C. The SN74F10 is characterized for operation from 0°C to 70°C.

FUNCTION TABLE
(each gate)

INPUTS			OUTPUT
A	B	C	Y
H	H	H	L
L	X	X	H
X	L	X	H
X	X	L	H

SN54F10 . . . J PACKAGE
SN74F10 . . . D OR N PACKAGE
(TOP VIEW)

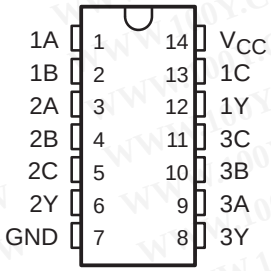

SN54F10 . . . FK PACKAGE
(TOP VIEW)

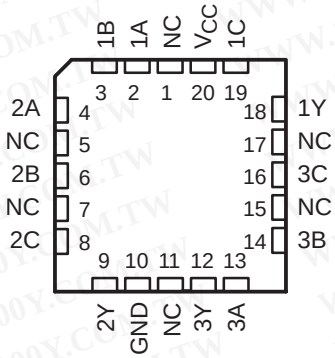

NC – No internal connection

logic symbol†

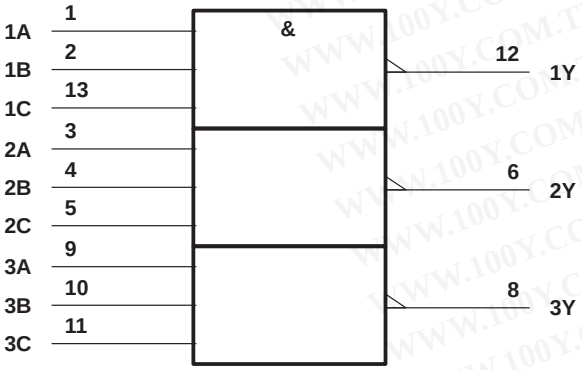

† This symbol is in accordance with ANSI/IEEE Std 91-1984 and IEC Publication 617-12.
Pin numbers shown are for the D, J, and N packages.

logic diagram, each gate (positive logic)

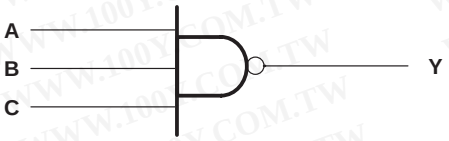

absolute maximum ratings over operating free-air temperature range (unless otherwise noted)†

Supply voltage range, V_{CC} . . . . . –0.5 V to 7 V
Input voltage range, V_I (see Note 1) . . . . . –1.2 V to 7 V
Input current range . . . . . –30 mA to 5 mA
Voltage range applied to any output in the high state . . . . . –0.5 V to V_{CC}
Current into any output in the low state . . . . . 40 mA
Operating free-air temperature range: SN54F10 . . . . . –55°C to 125°C
SN74F10 . . . . . 0°C to 70°C
Storage temperature range . . . . . –65°C to 150°C

† Stresses beyond those listed under "absolute maximum ratings" may cause permanent damage to the device. These are stress ratings only and functional operation of the device at these or any other conditions beyond those indicated under "recommended operating conditions" is not implied. Exposure to absolute-maximum-rated conditions for extended periods may affect device reliability.
NOTE 1: The input voltage ratings may be exceeded provided the input current ratings are observed.

recommended operating conditions

		SN54F10			SN74F10			UNIT
		MIN	NOM	MAX	MIN	NOM	MAX	
V_{CC}	Supply voltage	4.5	5	5.5	4.5	5	5.5	V
V_{IH}	High-level input voltage	2			2			V
V_{IL}	Low-level input voltage			0.8			0.8	V
I_{IK}	Input clamp current			–18			–18	mA
I_{OH}	High-level output current			– 1			– 1	mA
I_{OL}	Low-level output current			20			20	mA
T_A	Operating free-air temperature	–55		125	0		70	°C

electrical characteristics over recommended operating free-air temperature range (unless otherwise noted)

PARAMETER	TEST CONDITIONS		SN54F10			SN74F10			UNIT
			MIN	TYP‡	MAX	MIN	TYP‡	MAX	
V_{IK}	V_{CC} = 4.5 V,	I_I = –18 mA			–1.2			–1.2	V
V_{OH}	V_{CC} = 4.5 V,	I_{OH} = – 1 mA	2.5	3.4		2.5	3.4		V
	V_{CC} = 4.75 V,	I_{OH} = – 1 mA				2.7			
V_{OL}	V_{CC} = 4.5 V,	I_{OL} = 20 mA		0.3	0.5		0.3	0.5	V
I_I	V_{CC} = 5.5 V,	V_I = 7 V			0.1			0.1	mA
I_{IH}	V_{CC} = 5.5 V,	V_I = 2.7 V			20			20	µA
I_{IL}	V_{CC} = 5.5 V,	V_I = 0.5 V			– 0.6			– 0.6	mA
I_{OS}§	V_{CC} = 5.5 V,	V_O = 0	–60		–150	–60		–150	mA
I_{CCH}	V_{CC} = 5.5 V,	V_I = 0		1.4	2.1		1.4	2.1	mA
I_{CCL}	V_{CC} = 5.5 V,	V_I = 4.5 V		5.1	7.7		5.1	7.7	mA

‡ All typical values are at V_{CC} = 5 V, T_A = 25°C.
§ Not more than one output should be shorted at a time, and the duration of the short circuit should not exceed one second.

switching characteristics (see Note 2)

PARAMETER	FROM (INPUT)	TO (OUTPUT)	V_{CC} = 5 V, C_L = 50 pF, R_L = 500 Ω, T_A = 25°C			V_{CC} = 4.5 V to 5.5 V, C_L = 50 pF, R_L = 500 Ω, T_A = MIN to MAX†				UNIT
			′F10			SN54F10		SN74F10		
			MIN	TYP	MAX	MIN	MAX	MIN	MAX	
t_{PLH}	A, B, or C	Y	1.6	3.3	5	1.2	7	1.6	6	ns
t_{PHL}			1	2.8	4.3	1	6.5	1	5.3	

† For conditions shown as MIN or MAX, use the appropriate value specified under recommended operating conditions.

NOTE 2: Load circuits and waveforms are shown in Section 1.